Installation Qualification, Performance Qualification and Routine Control

Miller, Arne

Publication date:
2011

Document Version
Publisher's PDF, also known as Version of record

Cameron Quality Consultants

Validation and routine control of sterilization by irradiation

Arne Miller
Risø High Dose Reference Laboratory
Risø DTU
Technical University of Denmark
DK-4000 Roskilde
Denmark

Cameron Quality Consultants

Content of presentation:

- **Installation Qualification - IQ**
- **Operational Qualification - OQ**
- **Performance Qualification - PQ**
- **Process Control and Monitoring**

Installation qualification

undertaken to demonstrate that the sterilization equipment has been supplied and installed in accordance with specification.

Whether or not data are “in accordance with their specification” depends on agreement

Measurements often the same as for Operational Qualification

Responsibility: Facility Operator

ISO 11137-1, sect 9.1

Operational qualification

- *- carried out by irradiating appropriate test material to demonstrate the capability of the equipment to deliver the sterilization process that has been defined.*
- *- provides baseline data to show consistent operation of the facility*

Responsibility: Facility Operator

ISO 11137-1, sect 9.2

Operational qualification Gamma

- dose distribution in reference product(s)
- dose as function of dwell time
- process interruption
- mix of products

Cameron Quality Consultants

OQ gamma cont..

Gamma Facility Layout

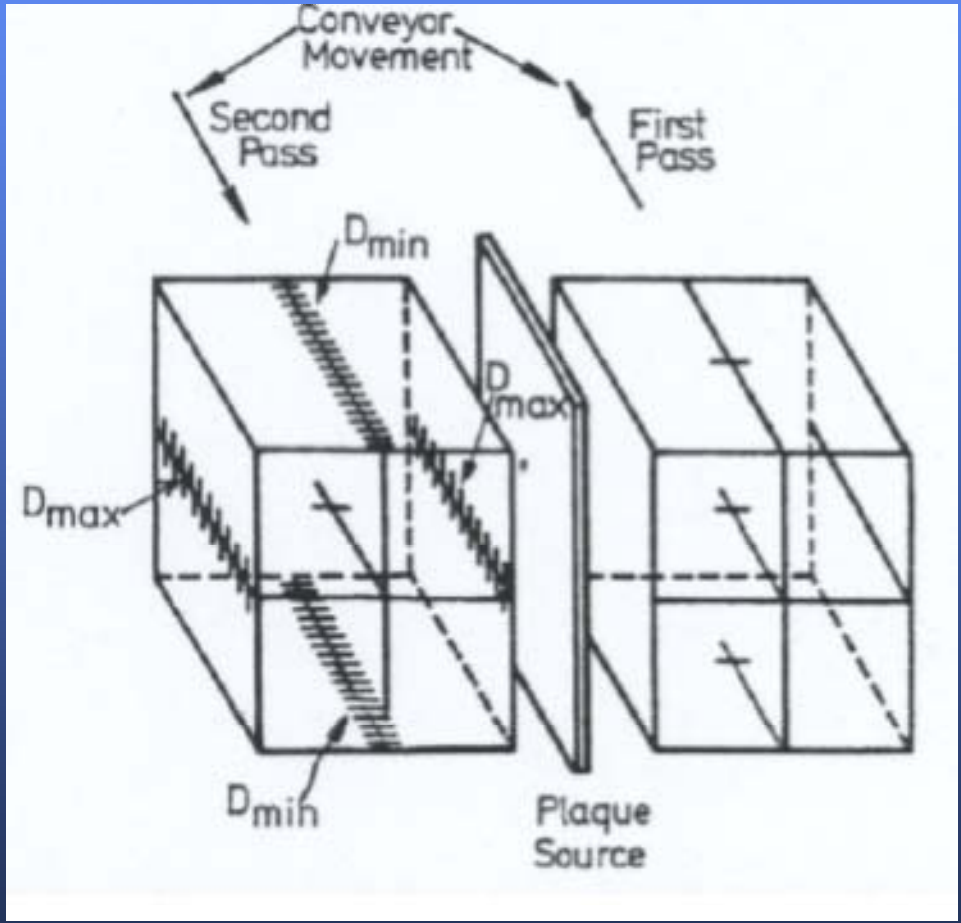

Cameron Quality Consultants

OQ gamma cont..

Placement of dosimeters

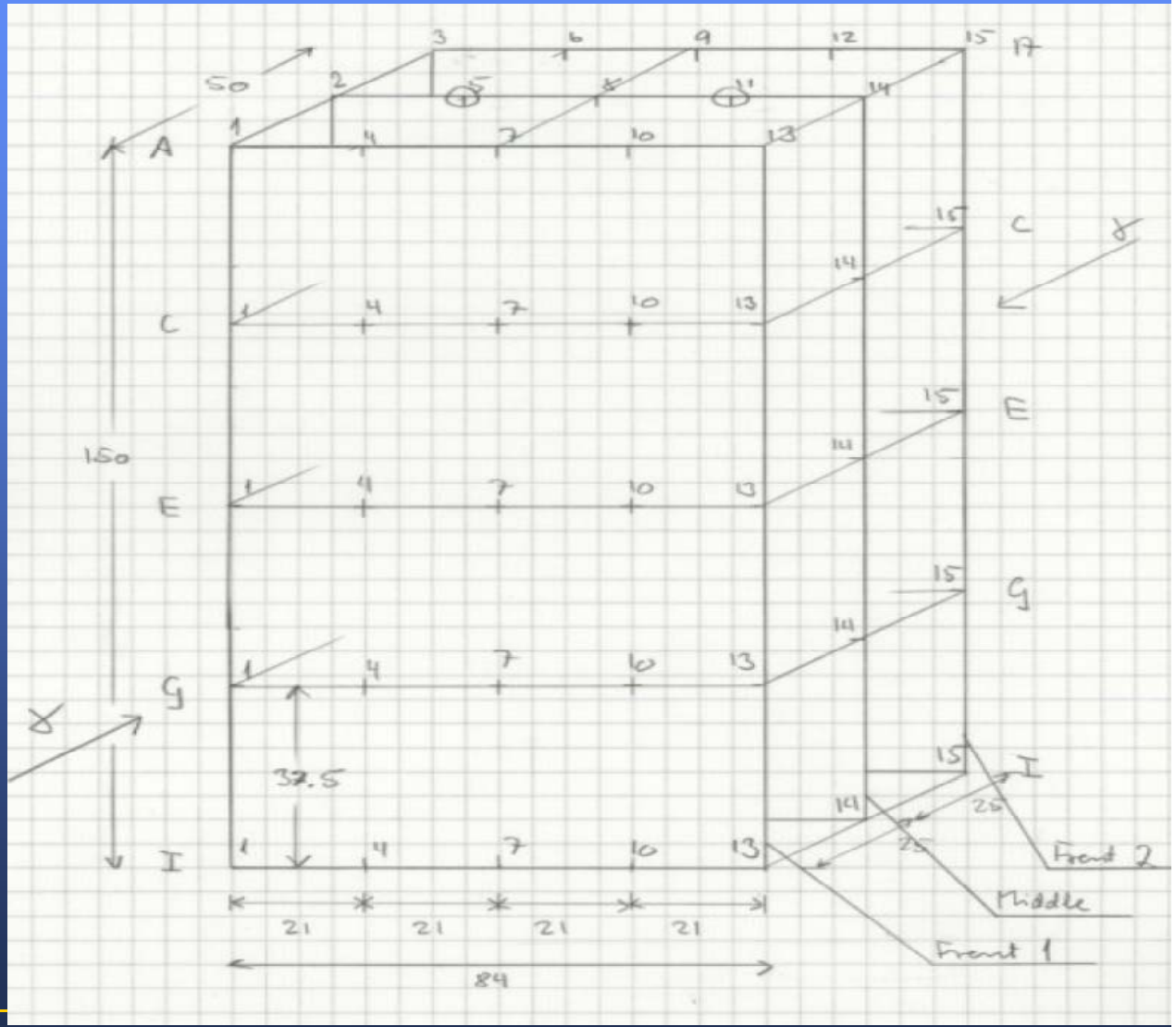

Cameron Quality Consultants

OQ Gamma cont..

Dose distribution in reference product

Isodose curves

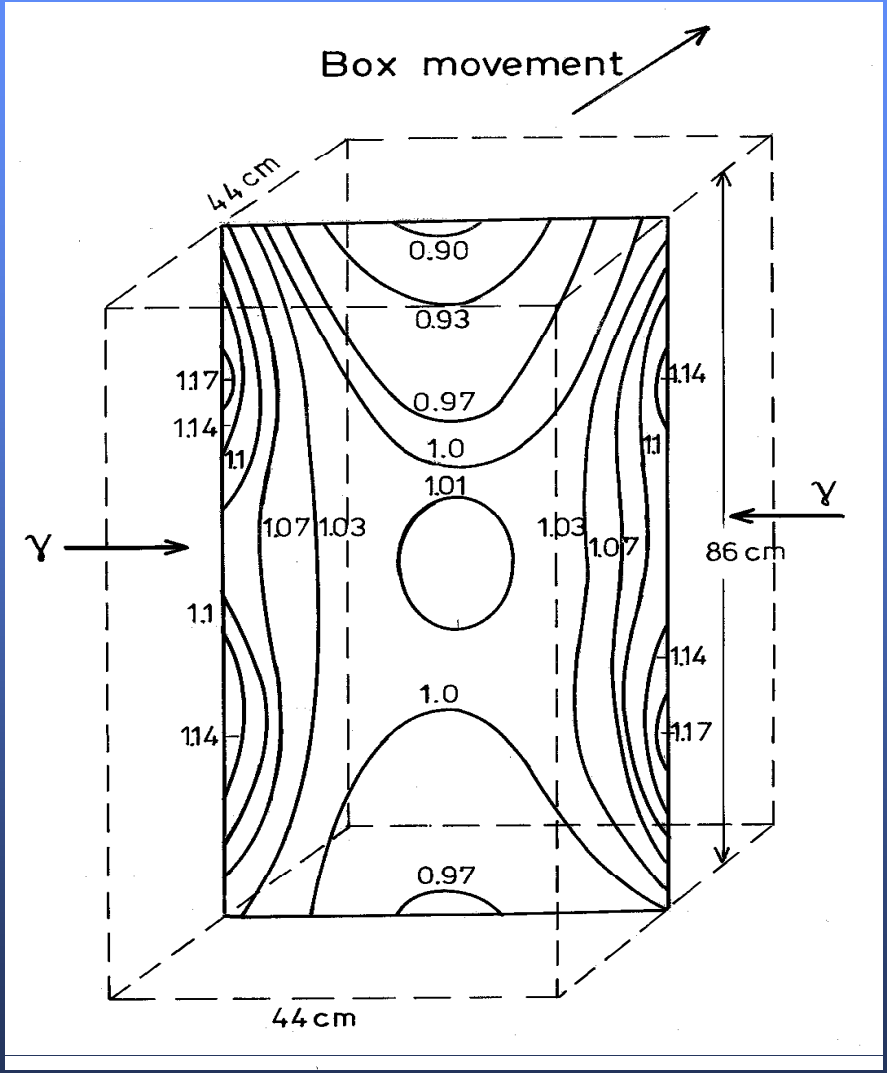

Cameron Quality Consultants

OQ gamma cont..

Dose mapping

- Dose maps must be made with fully loaded irradiation chamber
- Range of densities of reference product must cover extremes of products to be irradiated
- Additional measurement:
  - effect of process interruption

Cameron Quality Consultants

OQ gamma cont..

Dose mapping

- Dose mapping shall be carried out on a sufficient number of irradiation containers to allow determination of the distribution and variability of dose between containers

- Dose mapping must be repeated when significant changes of the irradiation plant are made, *e.g.* source change

Operational qualification Electron beam

- Characteristic parameters to be measured
  - dose distribution reference product
  - scan width
  - energy
  - dose as function of speed, current, beam width
  - beam spot
  - process interruption

Cameron Quality Consultants

OQ E-beam cont..

Placement of dosimet
in reference product

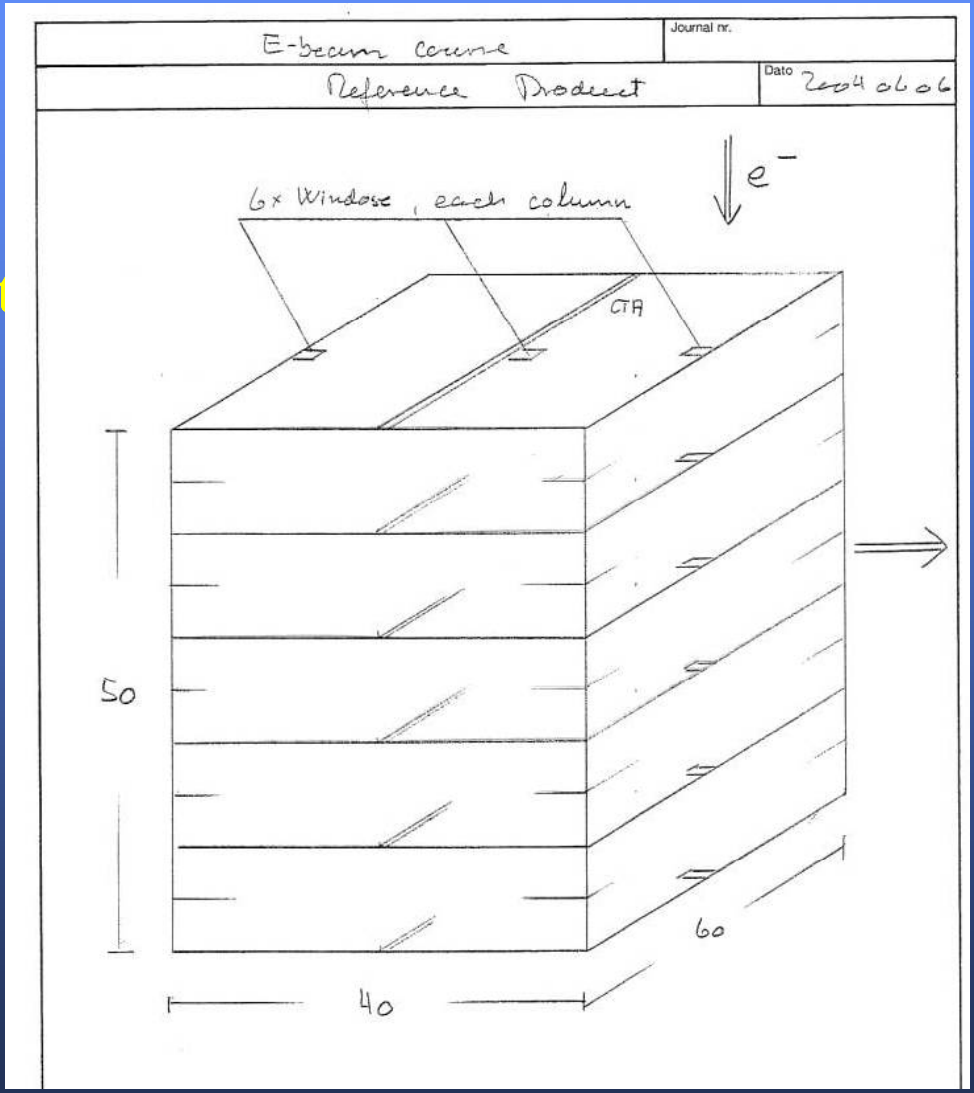

Cameron Quality Consultants

OQ E-beam cont..

Dose distribution in reference product

Limits for acceptable variations can be defined.

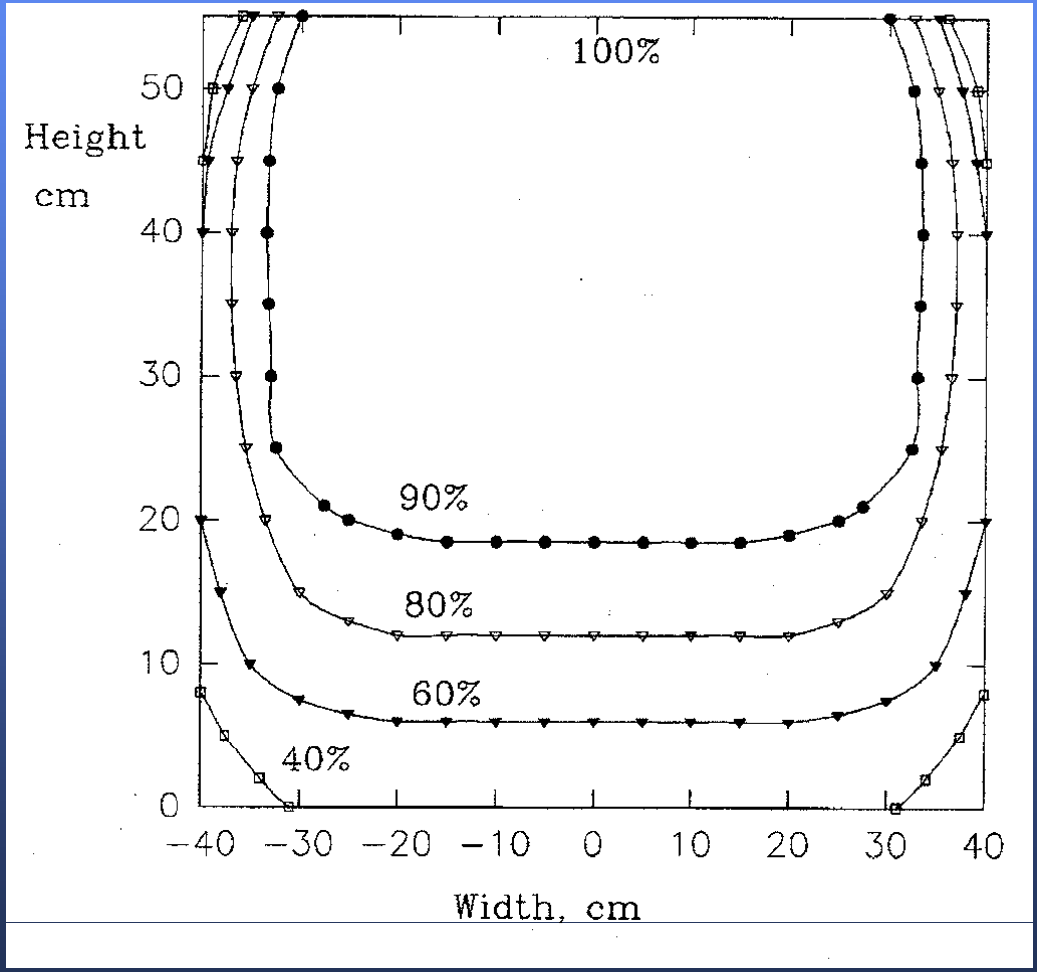

Cameron Quality Consultants

OQ E-beam cont..

Scan width (=extended beam width)

Limits for acceptable variations can be defined.

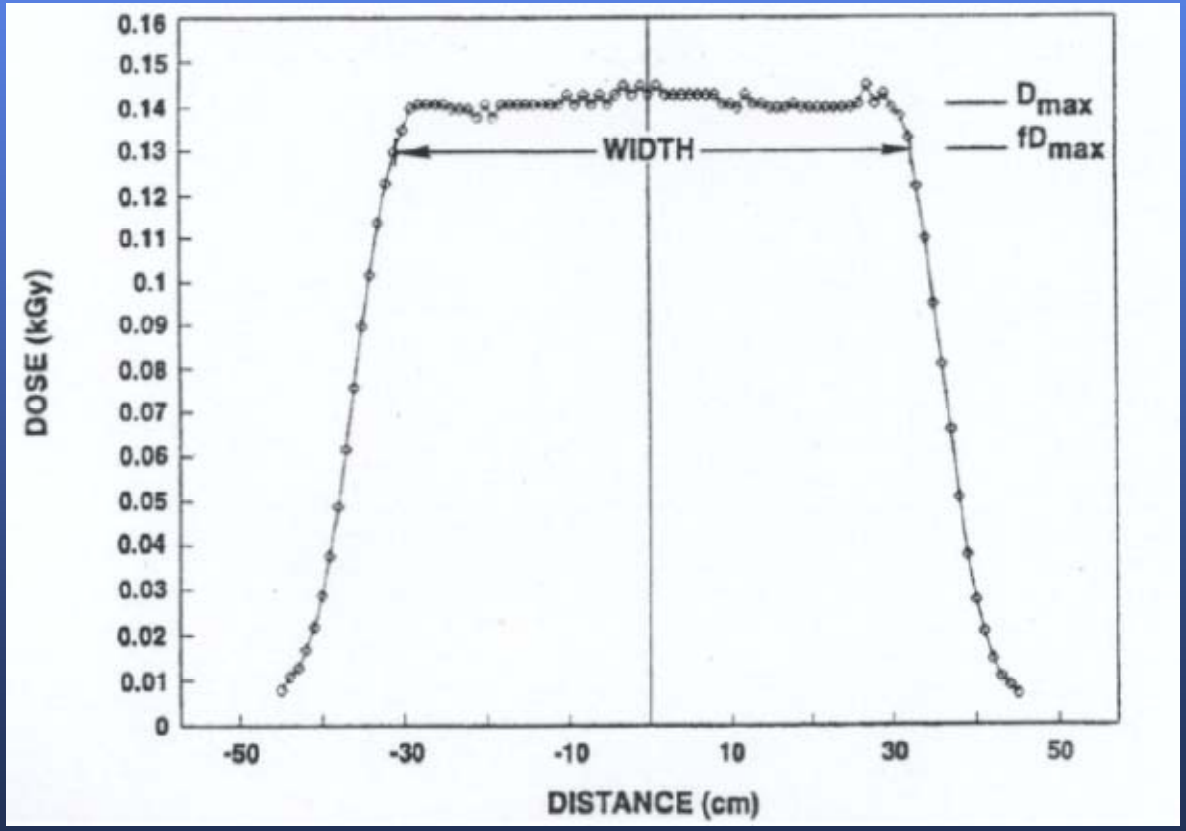

Cameron Quality Consultants

OQ E-beam cont..

Energy

Wedge and stack for energy measurement

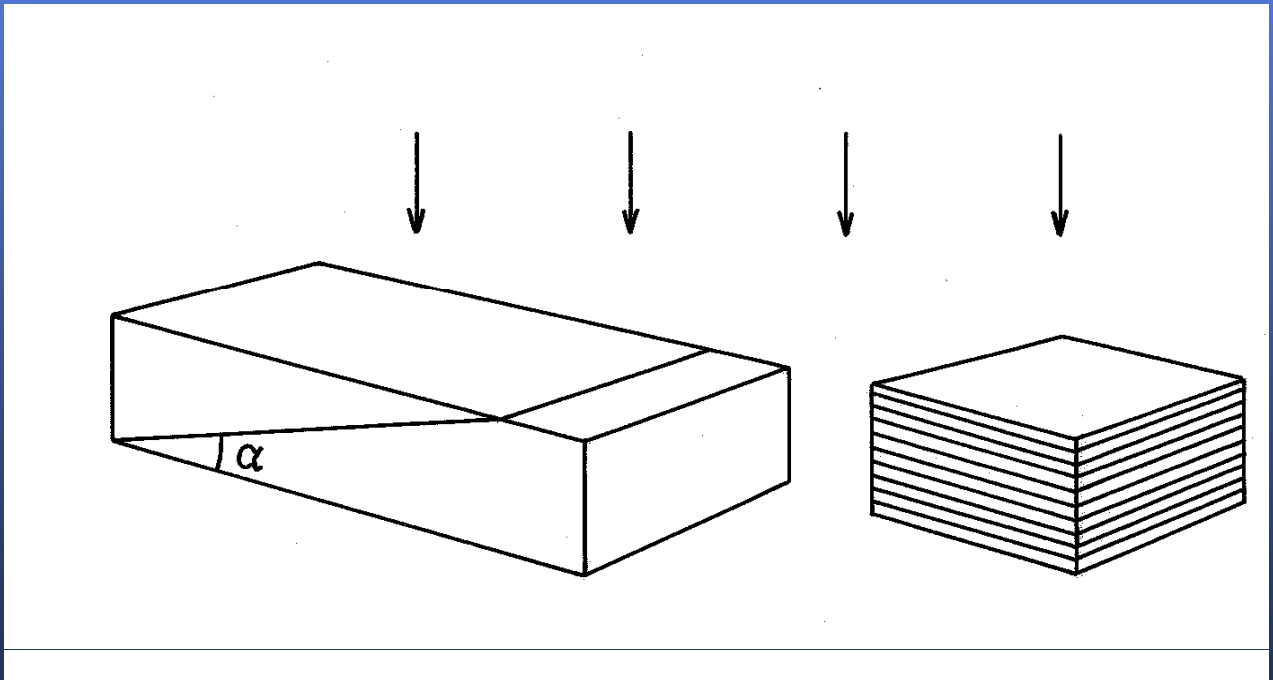

Cameron Quality Consultants

OQ E-beam cont..

Typical depth-dose curve

Energy – range relationships

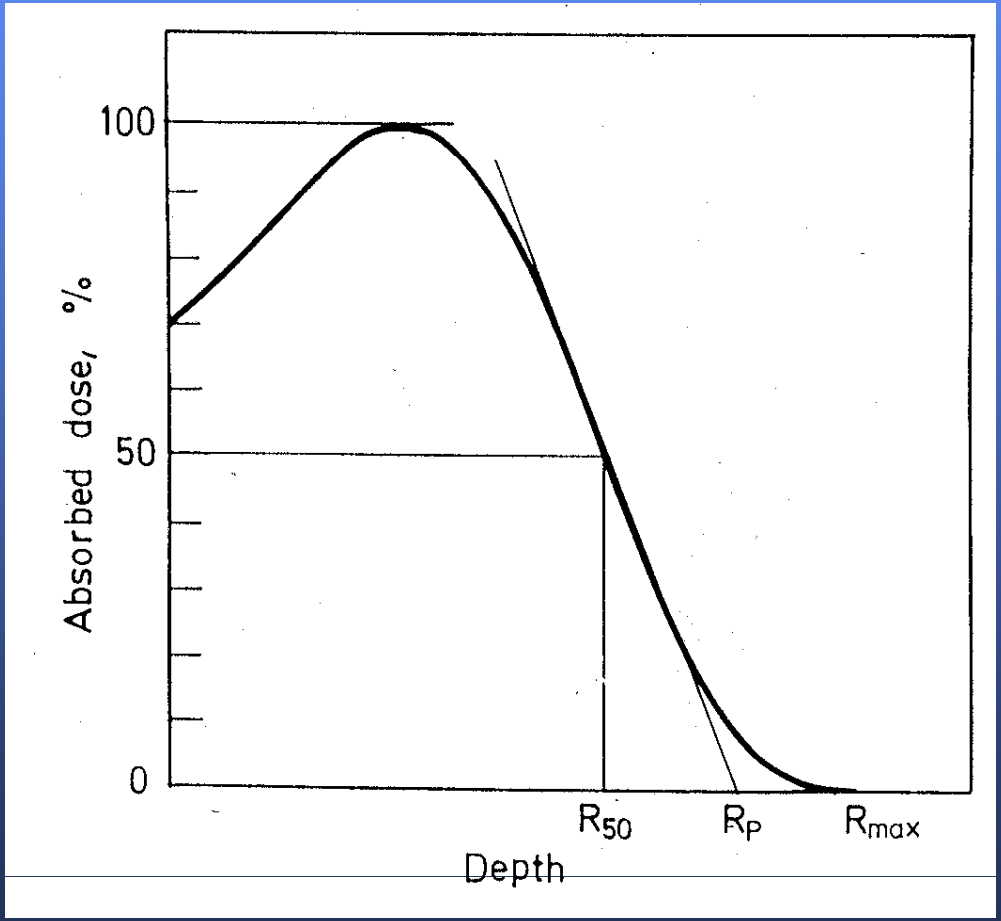

Cameron Quality Consultants

OQ E-beam cont..

Dose as a function of

- **beam current (I)**
- **conv speed (V)**
- **beam width (Sw)**

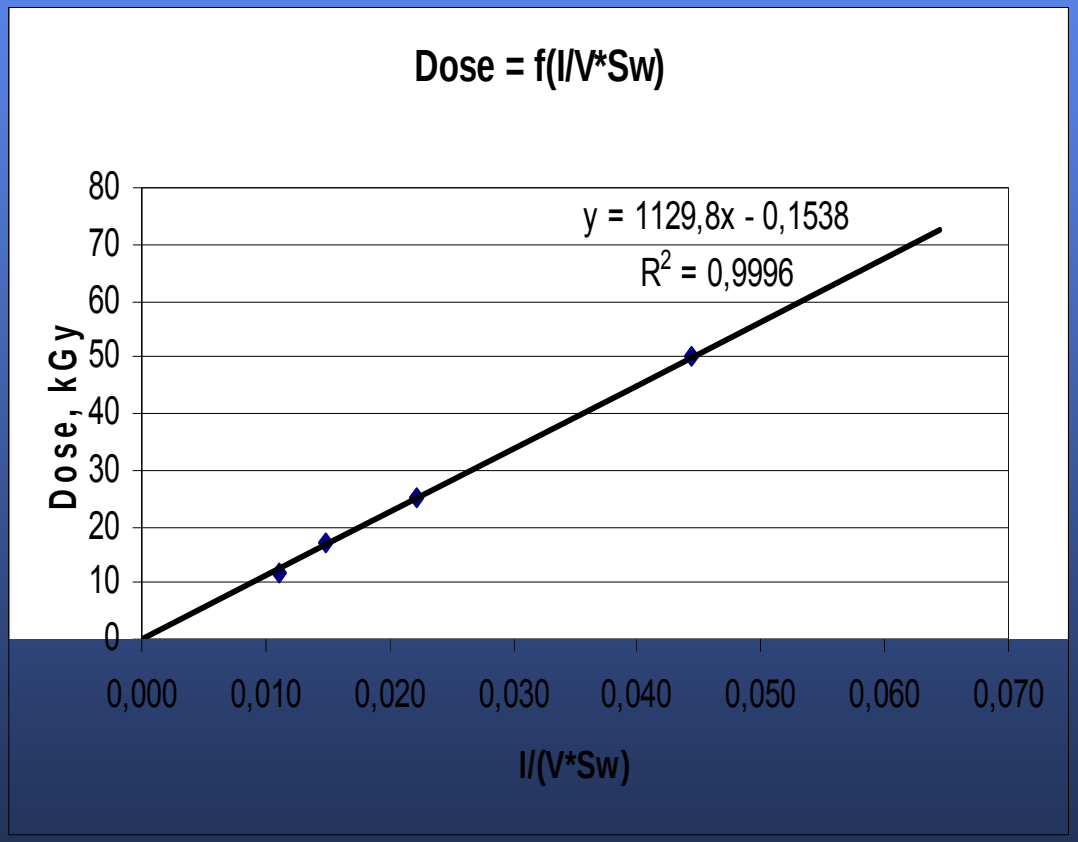

Cameron Quality Consultants

OQ E-beam cont..

Beam spot pattern

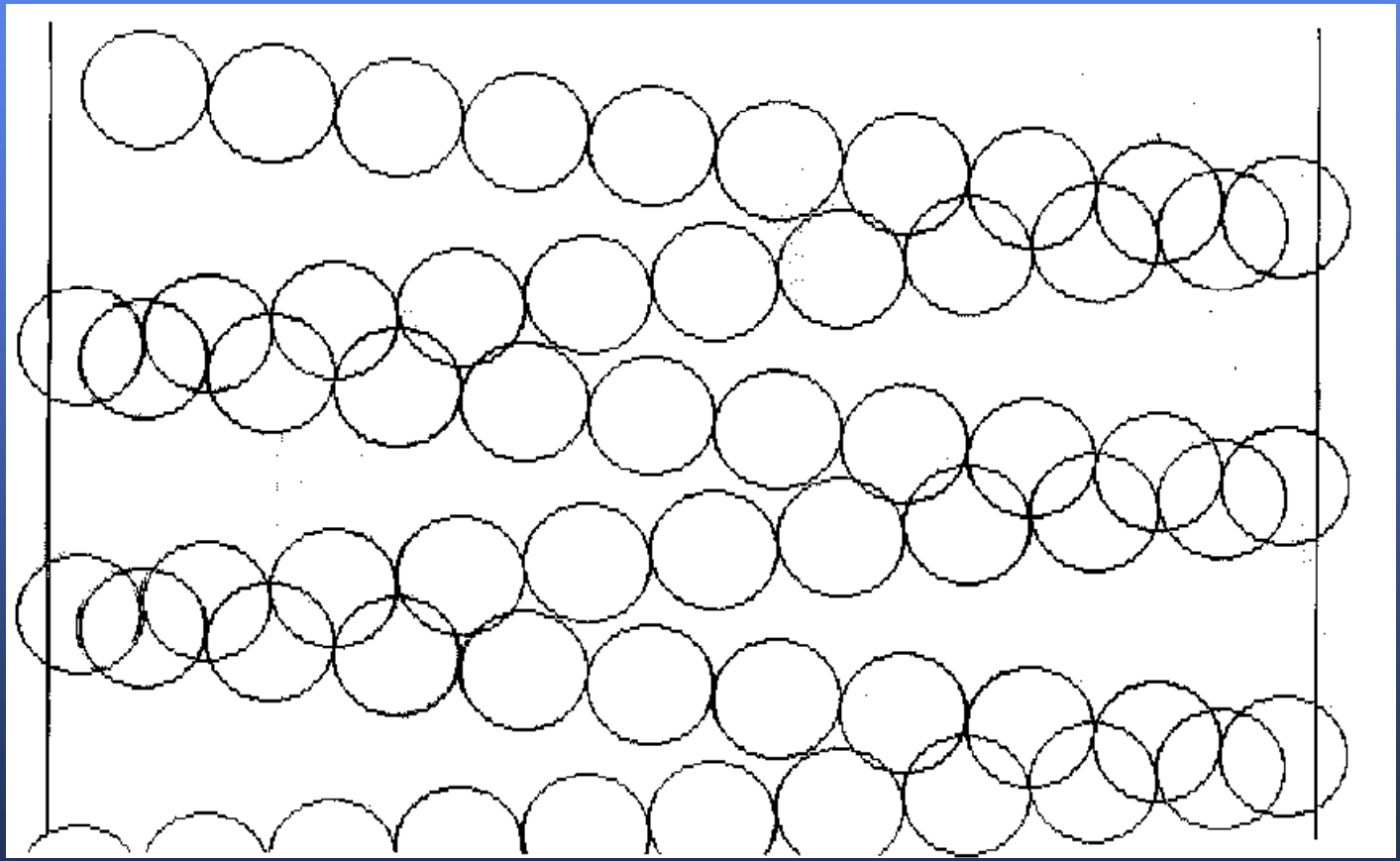

Cameron Quality Consultants

OQ E-beam cont..

Process interruption

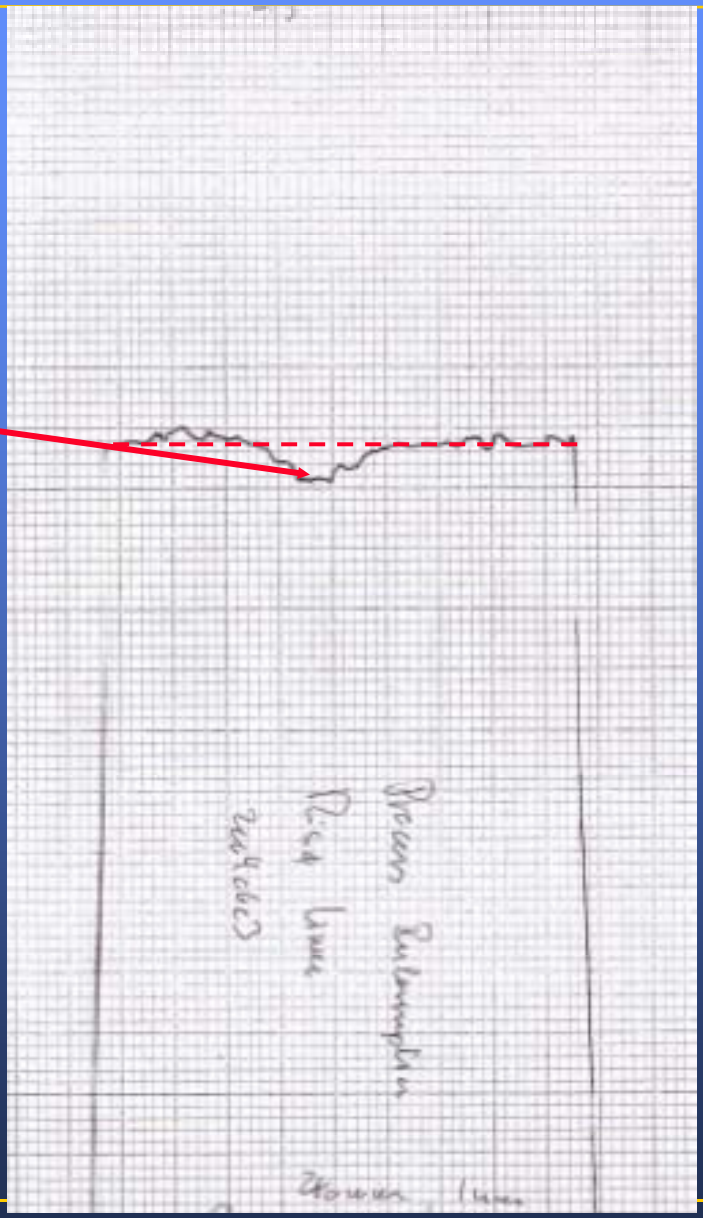

Cameron Quality Consultants

OQ E-beam cont..

- E-beam OQ should be repeated when significant changes of the irradiation plant are made that may influence dose or dose distribution.

- It is recommended to repeat OQ at regular intervals, e.g. annually in order to demonstrate consistent operation.

Cameron Quality Consultants

Performance qualification

Concerns dose mapping of real product

to identify the location and magnitude of minimum and maximum doses

and

to determine the relationship between the min and max doses and the routine dose

Responsibility: Primary Manufacturer

ISO 11137-1, sect 9.3

Cameron Quality Consultants

Performance qualification ..cont..

Purpose of dose mapping

- to demonstrate that:

- D (min) > D (Steril) and D (max) < D (acceptable)
- D (min) determined by sterilization requirements
- D (max) determined by radiation-induced changes in product

Cameron Quality Consultants

Performance qualification ..cont..

Strategies for dose mapping
- based on:

- OQ measurements
- Inhomogeneous product distribution, orientation, voids, interfaces.
- Experience

- Processing categories

Limitations of dose mapping

- Ability to measure “the true” value of D(min) or D(max)
- Location of dosimeter
- Resolution of dosimeter system

Cameron Quality Consultants

Performance qualification ..cont..

Examples from real life …..

Cameron Quality Consultants

Dose map examples

Cameron Quality Consultants

Performance qualification ..cont..

Measurement Uncertainty

Dose mapping shall be carried out using representative irradiation containers sufficient in number to determine the variability of dose between containers

Practical approach:

Either dose map in detail 3-10 containers

or

- dose map in detail one cntainer
- repeat measurement of D (min) and D (max) in several (e.g. 10) containers
- evaluate measurement uncertainty taking into account all uncertainty components.

Cameron Quality Consultants

Performance qualification ..cont..

Setting Process Limits

Select process parameters

- gamma: e.g. timer setting
- e-beam: e.g. conveyor speed

- so that D(min) will exceed D(sterile) and
- so that D(max) will not exceed D(acceptable)

Select process limits based on the measured uncertainty.

Practical approach

- select process parameters so that D(min) is two standard deviations higher than D(steril)

Cameron Quality Consultants

Performance qualification ..cont..

Selection of uncertainty limits for process control

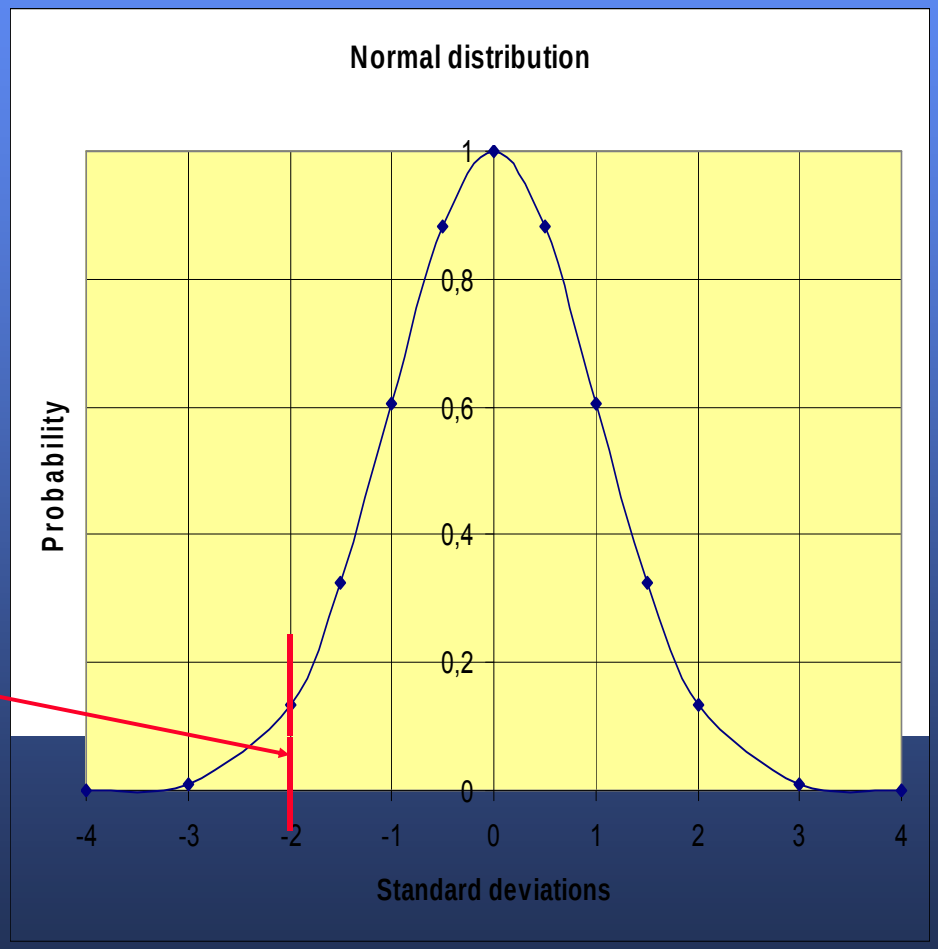

Limit based on
2 standard deviations

Cameron Quality Consultants

Performance qualification ..cont..

Repetition of Performance Qualification Dose Map

- Only needed if product is changed
  or if facility is changed
- review of documentation at defined intervals is recommended, e.g. every 3 years