Downloaded from orbit.dtu.dk on: Apr 25, 2024

DTU Library

Modeling Operating Modes for the Monju Nuclear Power Plant

Lind, Morten; Yoshikawa, H.; Jørgensen, Sten Bay; Yang, M.; Tamayama, K.; Okusa, K.

Published in:
8th International Topical Meeting on Nuclear Plant Instrumentation, Control and Human Machine Interface Technologies

Publication date:
2012

Document Version
Publisher's PDF, also known as Version of record

Link back to DTU Orbit

Citation (APA):
Lind, M., Yoshikawa, H., Jørgensen, S. B., Yang, M., Tamayama, K., & Okusa, K. (2012). Modeling Operating Modes for the Monju Nuclear Power Plant. In *8th International Topical Meeting on Nuclear Plant Instrumentation, Control and Human Machine Interface Technologies* (pp. 1420-143)

General rights
Copyright and moral rights for the publications made accessible in the public portal are retained by the authors and/or other copyright owners and it is a condition of accessing publications that users recognise and abide by the legal requirements associated with these rights.

- Users may download and print one copy of any publication from the public portal for the purpose of private study or research.
- You may not further distribute the material or use it for any profit-making activity or commercial gain
- You may freely distribute the URL identifying the publication in the public portal

If you believe that this document breaches copyright please contact us providing details, and we will remove access to the work immediately and investigate your claim.

MODELING OPERATING MODES FOR THE MONJU NUCLEAR POWER PLANT

M. Lind[1], H. Yoshikawa[2], S. B. Jørgensen[3], M. Yang[2], K. Tamayama[4] and K. Okusa[4]

1. Dept. Electrical Engineering, Technical University of Denmark, Kgs. Lyngby, Denmark, Visiting Professor at College of Nuclear Science and Engineering, Harbin Engineering University, Harbin, China.
2. College of Nuclear Science and Technology, Harbin Engineering University, Harbin, China
3. Dept. Chemical and Biochemical Engineering, Technical University of Denmark, Kgs. Lyngby, Denmark
4. FBR Plant Engineering Center, Japan Atomic Energy Agency, Fukui, Japan

mli@elektro.dtu.dk

ABSTRACT

The specification of supervision and control tasks in complex processes requires definition of plant states on various levels of abstraction related to plant operation in start-up, normal operation and shut-down. Modes of plant operation are often specified in relation to a plant decomposition into subsystems or components or defined in relation to phases of the plant process. Multilevel Flow Modeling (MFM) is a methodology for representing goals and functions of complex process plants on multiple levels of means-end abstraction and is based on conceptual distinctions between purposes or goals of the process plant, its function and its structural elements. The paper explains how the means-end concepts of MFM can be used to provide formalized definitions of plant operation modes. The paper will introduce the mode types defined by MFM and show how selected operation modes can be represented for the Japanese fast breeder reactor plant MONJU.

Key Words: Nuclear Power Plants, Multilevel Flow Modeling, Operating Modes, Knowledge representation.

1 INTRODUCTION

The specification of supervision and control tasks in complex processes requires definition of plant states on various levels of abstraction related to plant operation in start-up, normal operation and shut-down. Modes of plant operation are often specified informally in relation to a plant decomposition into subsystems or components or defined in relation to phases of the process referring to plant functions.

Multilevel Flow Modeling (MFM) is a methodology for representing goals and functions of complex process plants on multiple levels of means-end abstraction and is based on conceptual distinctions between purposes or goals of the process plant, its function and its structural elements [1, 2]. At present MFM offers a very rich conceptual framework for representing goals, functions and plant structure and their relations and supports causal reasoning and reasoning about control actions [3, 4]. The paper will show that the means-end concepts of MFM can be used to formally define plant operation modes. The paper will introduce the mode types defined by MFM and describe how they relate to operation modes as usually defined in control engineering. The concepts will be demonstrated by modeling selected operation modes for the Japanese fast breeder reactor plant MONJU.

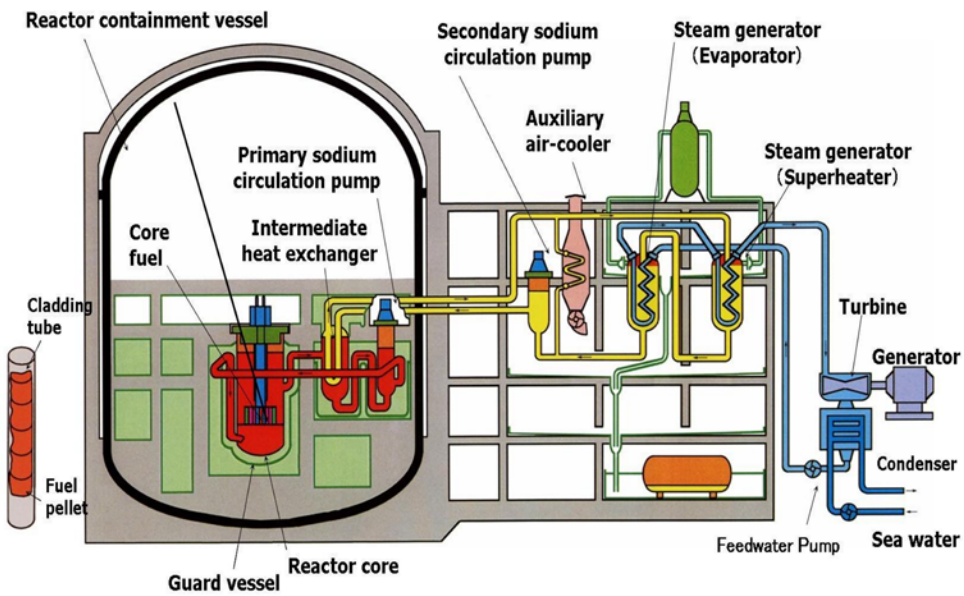

Figure 1: MONJU plant overview

In the following we will first introduce the MONJU nuclear power plant and describe the operation modes which are defined for plant start-up. Then we will give a short introduction to MFM and the modes types which can be derived from the means-end concepts of MFM. Finally we will show how MFM can be used to represent two selected operating modes of the MONJU reactor.

2 THE MONJU NUCLEAR POWER PLANT

The MONJU nuclear power plant (Fig. 1) has a moderate electrical output of 280 MWe at full power but the plant configuration is rather complex in comparison with a conventional light water reactor. The reactor fuel is mixed oxide pellets with stainless steel cladding, and the reactor coolant is liquid sodium. The plant is composed by three different loops. The reactor power generated in the core is transferred by sodium coolant in the primary loop. The conveyed heat in the primary loop is then transferred to a sodium coolant in the secondary loop by an intermediate heat exchanger. The heat conveyed by the secondary sodium coolant is then transferred to the water coolant in the ternary loop by a rather complex configuration of water passage route including an evaporator, steam separator, super-heater, turbine, condenser, as well as air ventilation paths and many bypass route for the steam by the manipulation of many valves. The MONJU plant had stopped operation since December 5, 1995 due to a sodium leak accident until its restart in May 6, 2010. However, soon after restart it has been out of service for two years due to troubles with the fuel transfer machine after reactor shutdown for refueling.

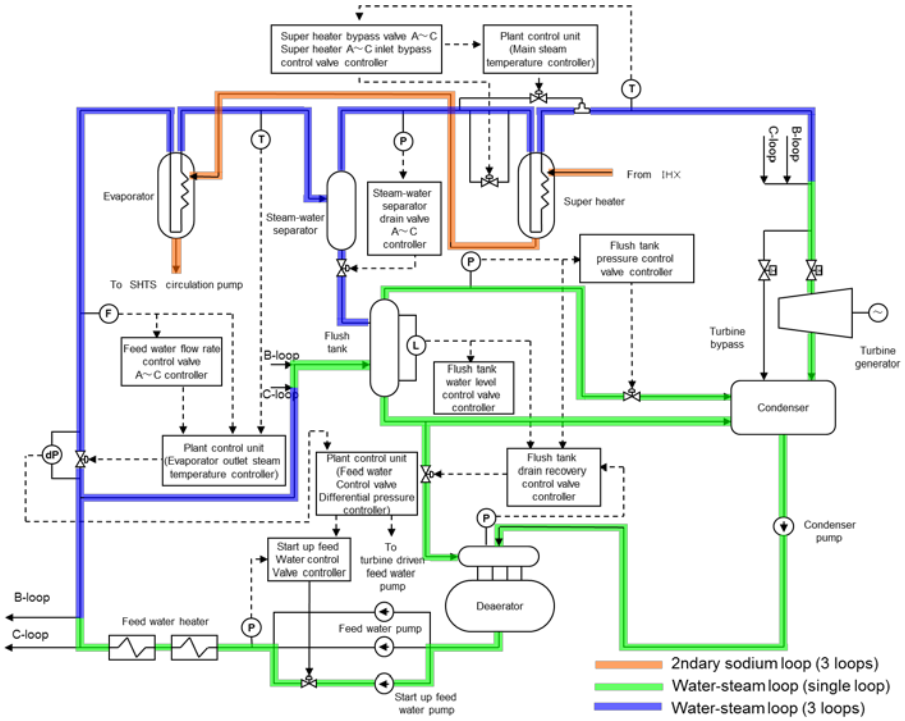

Figure 2: Main flow paths and control systems for MONJU

2.1 Control systems of the MONJU FBR

The main flow paths and the control system of the MONJU FBR (Fig. 2) are more complex than for a light water reactor due to the many loops, components, pipes and valves, etc. and many feedback control systems. Details of the control system of the MONJU plant are described by Takahashi and Tamayama [5]. Objectives of the major control systems are shown in Table 1.

Table 1: Summary of major control systems in MONJU

Control System	*Control targets*	*Objective*
Power demand master	Plant power level signal	Set plant power level signal within power change restriction
Reactor power control System	Fine control rod movement	Create FCRD control signal to meet power demand within reactor outlet temperature limit
		Drive FCRD
Primary main coolant flow control system	Primary sodium flow rate	Set flow rate to meet power demand
Secondary main coolant flow control system	Secondary sodium flow rate	Set flow rate to meet power demand
Feed water flow Control system	-EV outlet steam temperature setting -DP between feed water adjust valve	Maintain degree of super heat of EV outlet steam temperature
Main steam temperature Control system	SH outlet steam temperature	Maintain preset value of main steam temperature
Main Steam Pressure Control System	Main steam pressure	Maintain main steam pressure

2.2 Overall Operation modes

The MONJU plant is operated in two overall modes A and B covering plant operation control from start-up until full power.

A. Operation control from reactor shutdown until generator is synchronized with the electric grid (40 % of full power)
B. Operation control from 45% reactor power (40 % of full power) until 100 % power

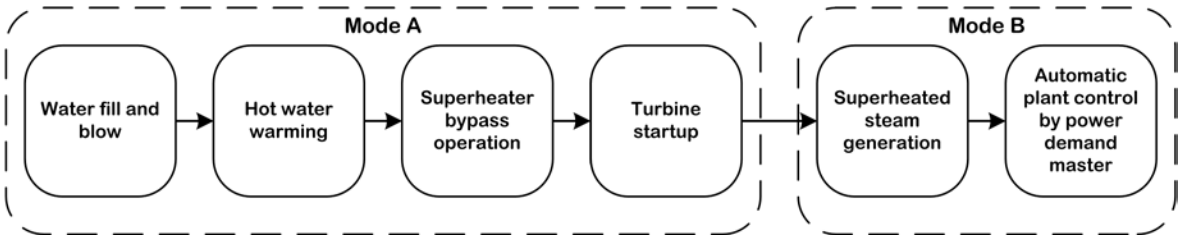

Figure 3: Modes of the MONJU Plant startup

The two overall operating modes A and B are decomposed into 6 sub-modes as shown in Fig. 3. The plant start-up includes a stepwise transition between these sub modes as indicated by the directed arrows. The sub modes will be explained below.

2.2.1 Operating Mode A

Mode A covers the transitions in operations from reactor shut down until the generator is synchronized with the electric grid at 40 % of full power. Table 2 depicts the changes in water and stream flow paths during the transitions in mode A. At the beginning there is no water or steam in the steam generator and turbine.

1. Start-up main pump of primary sodium loop, main pump of secondary sodium loop, condenser pump of feed water loop and start-up feed water pump. Their flow rate values are equivalent to those of 40% full power.
2. Then start nuclear heating by control rod extraction.
3. The plant power will be increased gradually to 40 % of full power state by the operation control of water/steam loop

The operation of the water/steam loop is different from the sodium loops by the following reasons:

- Phase change of single liquid water, two phase, and saturated steam.
- Unlike the piping in the sodium loops, there are no pre-heating equipment for the water/steam piping system
- Since no wet steam is allowed to enter the super heater, super heater operation should be started after super heated steam can be generated in the evaporator

The three main stages of start-up control in mode A are as follows;

1. From water blow, warming up until feed water passage into evaporator to start evaporator feed water flow rate control and outlet steam pressure control of steam/water separator
2. Start super heater bypass operation to proceed with turbine start up until super heated steam generation by evaporator to be led to the super heater.
3. From establishing generator power connection to grid until automatic plant control by power demand master

Table 2: Water and steam flow paths in Mode A

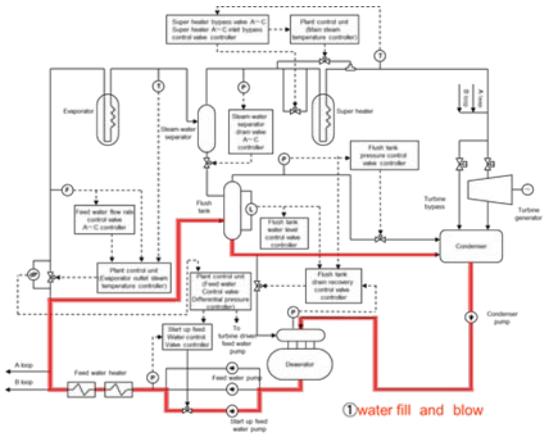 Flow paths for <u>water fill and blow</u>	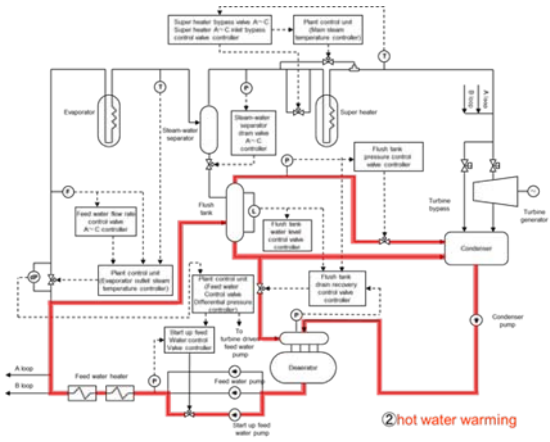 Flow paths for <u>hot water warming</u>: Warming up by auxiliary boiler and feed water heaters until feed water passage into evaporator.
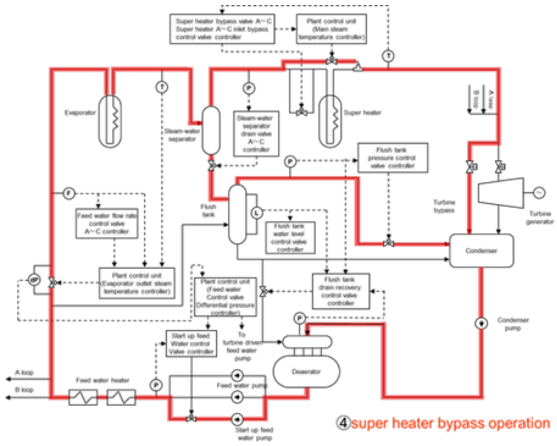 Flow paths for <u>super heater bypass operation</u>: Super heater bypass operation until superheated steam generation by evaporator can be led to the super heater.	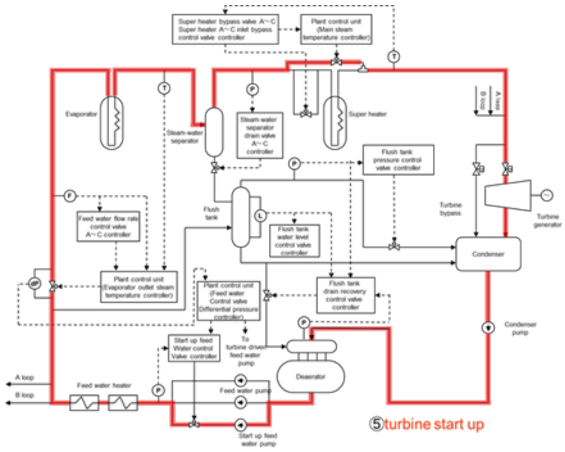 Flow paths <u>for turbine start-up</u>: Start up of turbine using superheated steam from evaporator.

2.2.2 Mode B

Mode B covers the transitions in operations from 45% reactor power (40 % of full power) until 100 % of full power. Table 3 depicts the changes in water and stream flow paths during the transitions in mode B. The operations in mode B can be explained as follows:

1. When reactor power reaches 45% , the electric power output becomes 40%,
2. From this stage the plant control moves to cascade control mode where individual sub control systems will be controlled by the demand signals issued by power demand master.

Table 3: Water and steam flow paths in Mode B

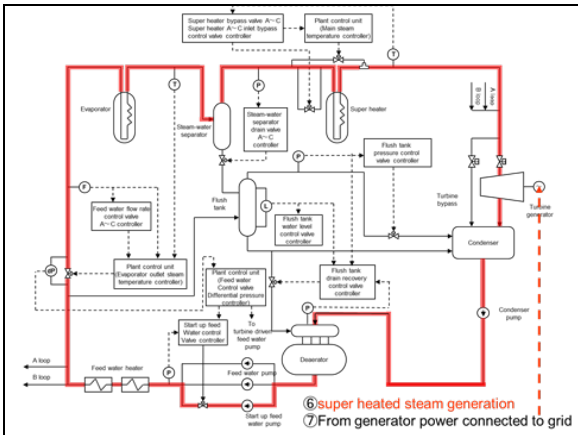	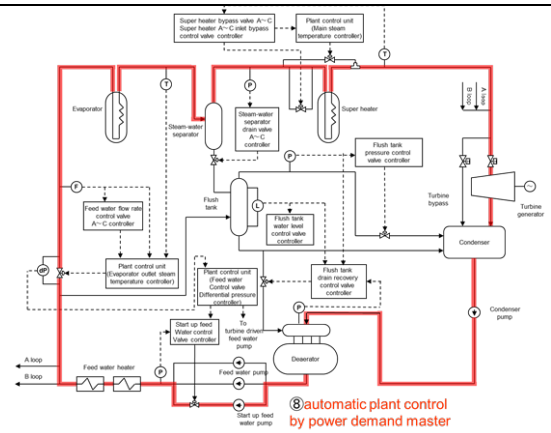
Flow paths for <u>superheated steam generation</u>: Steam from the evaporator is superheated further until reactor power reaches 45% (the electric power output 40%)	Plant control by power demand master: In this stage the plant control is changed to cascade control mode where individual sub control systems are coordinated by the demand signals issued by power demand master.

The operation modes for MONJU have not been defined by basic scientific principles but made by trial and error by computer simulation of the plant behavior to comply with control requirements. Validation should be made by operational tests. In the following we will show that Multilevel Flow Modeling can be used to provide formalized representations of the MONJU operation modes based on fundamental principles. A formalized representation of operation modes can be used for the design of systems for supervisory control and risk monitoring. The ability to represent operation modes in separate MFM models is important for the development of MFM based risk monitoring and diagnosis functions which can cover several operation modes [3, 6].

3 MULTILEVEL FLOW MODELING

MFM belongs to a branch of AI research called qualitative reasoning. The purpose of this research is to represent and reason about qualitative knowledge of physical systems. The MFM modeling language realizes these aims within the general domain of industrial processes and their automation systems. A particular challenge addressed by MFM is to offer modeling and reasoning techniques that can handle the complexity of large scale dynamic processes like e.g. the MONJU plant.

MFM represent goals and functions of process plants as interacting flows of material, energy and information. Concepts of means-end and whole-part decomposition and aggregation play a foundational role in MFM. These concepts enable humans to cope with complexity because they facilitate reasoning on different levels of abstraction. The power of means-end and part-whole concepts in dealing with complexity has roots in natural language. But natural language is not efficient for representing and reasoning about means-end and part-whole abstractions of complex physical artifacts. MFM development draws on insights from the semantic structure of natural language but is designed as an artificial diagrammatic language which can serve modeling needs of complex engineering domains. MFM concepts and their graphic representations are shown in

Fig. 3. A detailed introduction to MFM and comprehensive descriptions of modeling examples are presented elsewhere [1, 2]. An MFM model of the MONJU FBR reactor considered here is explained in detail in Lind et. al.[7].

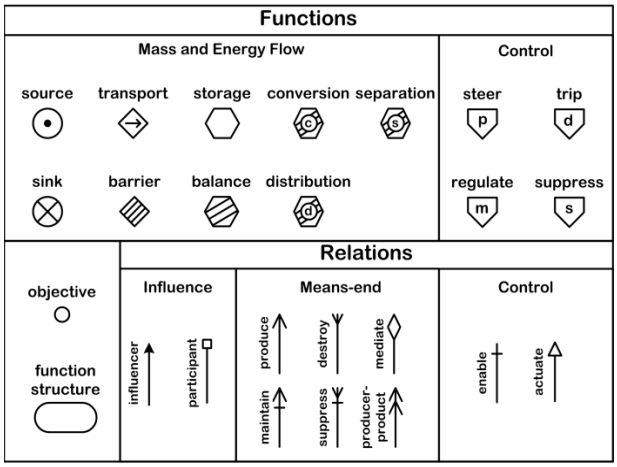

Figure 3: MFM Concepts and symbols

The MFM concepts (Fig. 3) can be used to build models representing plant goals and functions. Recent extensions of MFM define additional concepts to represent relations between function and structure [8]. A relation between function and structure is actually composed of two relations and a role. A role is associated with a function and provides an abstract representation of a structure by its contribution to a function. For example the transport function performed by a pump is associated with an agent role which represents the contribution of the pump to transport function. The transport function would also include an object role representing the contribution of the fluid transported. A relation between function and structure accordingly involves a role and an association relation and a realization relation. The role concept is important for definition of some of the mode types in MFM but will be ignored in the modeling of the MONJU operation modes presented later.

3.1 Modes in Multilevel Flow Modeling

The concept of mode is used in a variety of ways within engineering. We speak for example about control modes and modes of operation. The operating modes of the MONJU reactor described above define different stages of the startup which either have different objectives or different physical plant configurations or different control strategies. However, distinctions between different modes types are not made. Distinctions are important for the formalization of control actions involved in mode transitions. The concept of mode is also used in human factors to define a special category of human error where an operator is not aware of the current “mode” of automation. This mode problem has been the cause of serious accidents because the operator made decisions and interacted with the automation without knowing that the automation was in a different state than expected. In order to avoid such error it is mandatory to design the human machine interface so that that the operational state or mode of the automation system is transparent. Specification of modes is also important for the engineer designing the control logic and algorithms.

However, the semantics of the mode concept is accordingly somewhat vague and also overlapping with other words like state and phase. In the following we will provide a definition of the mode concept and a distinction between mode types derived from Multilevel Flow Modeling which contributes to a clarification.

3.1.1 Some Definitions

The Merriam-Webster dictionary defines a mode as “a particular way of something”. This very abstract definition allows a variety of interpretations. Here we will define a mode as the ways a purpose (the something) is reached i.e. to different modes of action. More precisely, a mode is the means or the manner (the ways) by which a purpose is reached.

It follows from this definition that modes of a system can be specified in relation to a means-end modeling framework. We can therefore expect that the application of MFM which makes refined distinctions between different types of means and ends would contribute to a considerable clarification of the concept of mode. This is what is proposed below.

3.2 MFM mode types

The concept of mode refers accordingly to the end-means relation. Modes for a system are therefore distinguished by being the relations between a system purpose and the different alternative means, manner or ways by which it is reached. Since multiple means could be involved in reaching a purpose we will define a mode as a set of relations connecting an end with some means.

Multilevel Flow Modeling provides an extensive set of concepts for representing end-means relations in complex systems (see Fig. 3). The concept of purpose is not an explicit concept of MFM but rather seen as super-ordinate and including concepts of goal, objective, function and role which all have connotations relating to purposes. MFM includes the end-means relations shown in Fig. 3 and the relations between functions, role and structure. Each end-means relation has an interpretation in terms of mode as shown in Table 3. This leads to the modes types in Table 4.

Table 3: Mode interpretations of end-means relations

End-means relation	***Interpretation in terms of mode***
goal←objective	meeting an objective is a particular way to reach a goal (the purpose)
objective←function	performing a function is a particular way to achieve an objective (the purpose)
function←role	performing a role is a particular way of contributing to a function (the purpose)
role←structure	providing a structure is a particular way to realize a role (the purpose)

Each of the mode interpretations in Table 3 leads to two complementary mode types as shown in Table 4. One type assumes that the end is given and specifies the alternative means (end to means). The other type assumes a given set of means and specifies the end which they achieve (means to end). Modes can also be defined in relation to the control relations shown in Fig. 3 but will not be discussed here.

MFM models are by definition multilevel representations and the mode types defined above would in most practical cases produce hierarchical mode structures i.e. one mode may include a combinations of sub-modes of various types. As an example, an objective mode could include several function modes and each function in those modes may again include several role modes etc.

Table 4: End-means relations in MFM and corresponding modes types

End-means relation	***Purpose***	***Mode type***
goal←objective	To reach the	Objective-goal mode (end to means)

	goal	A mode is here defined as the set of objectives which should be met to reach a given goal. Different sets of objectives could be defined each defining a mode.
		Goal-objective mode (means to end) A mode is here defined by a goal which can be reached by a set of given objectives. There could be several alternative goal-objective modes because a set of objectives could serve several alternative goals.
objective←function (produce, maintain, destroy, suppress)	To reach the objective	Function-objective mode (end-to means) A mode is here defined as a set of system functions used to realize a given objective. A mode would then be described the objective and a flow or control structure and there could be different alternative structures for the same objective each characterizing a particular process or control mode for the system.
		Objective-function mode (means to end) A mode is here defined by an objective which is served by a set of given functions. There could be several objective-function modes because different alternative objectives may be served by the same set of functions.
function←role (associate)	To contribute to a function	Role-Function mode (end to means) A mode is here defined by a set of roles which can be associated with a given function. Different alternative role sets could be possible for the same function. Each of these sets and the function would define a role-function mode.
		Function-Role mode (means to end) A mode is here defined by a set of functions which can be associated with a given role. There could be several function-role modes because different alternative set of functions may be associated with the same role.
Role←structure (realize)	To realize a role	Structure-Role mode (end to means) A mode is here defined as a set of physical components which realize a given role. Different components for the same role are possible. Each set of components and the role would define a mode. This mode concept is useful for distinguishing between different modes of pumping e.g. forced versus natural circulation.
		Role-Structure mode (means to end) A mode is here defined by a set of roles which is realized by a given component.

3.3.1 Mode transitions

The MFM mode types defined above can be used to characterize transitions during plant start-up or shut down. A transition could be between modes of same type e.g. between two function–objective modes when there is a transition between alternative function sets for the

same objective. Often however, a transition is more complex and will involve changes in e.g. the structural configuration as well as the goal-function relations. For example a change in plant objectives may require changes in the functions required i.e. a selection between different alternative function-objective modes for the new objective and for each of the function in that mode a selection between different structure-function modes. The mode transitions of the MONJU start-up described above involve such complex combinations.

4 MODELLING OF MONJU OPERATION MODES

In the following we will show that MFM can be used to represent two selected operating modes of the MONJU FBR plant. We will not cover all the operating modes as this would be outside the scope of the present paper. The two selected modes will be represented by MFM models. One of the modes is "the superheated generation mode (B)" for which an MFM model already has been presented in detail elsewhere [7]. The model for this mode is shown in Fig. 5 and will briefly be explained below. The other mode is "hot water warming (A)" which will be explained in more detail below.

The two modes selected are distinguished in two ways because they have different flow path configurations i.e. different structure and they have different goal-function relations. The MFM models of the two modes selected makes explicit the rather complex changes in the overall system states between operating modes. The goal, function and their end-means relations represented in MFM enables explicit definitions of the feasible (or possible) operating modes not as specifications of a set of quantitative states but as conceptual structures.

4.1 MFM model of superheated generation mode

A detailed description of the MFM model for superheated generation mode is presented by Lind et. al.[7]. The reader can there find a comprehensive explanation of the model. The representations of goals and functions of the PHTS, SHTS and the ECS subsystems are indicated in figure 5. The model show the pumping functions (efs1, efs2, efs3) and the functions of the water steam cycle (mfs1 and efs4) and their interconnections by means-end relations. The functional levels are also related by control functions (cst1, cst2, cst3, cst4, cst5, cst6, cst7 and cst8). Note that the overall coordination functions in MONJU performed by the power demand master, the reactor power program, the reactor outlet sodium temperature program, the PHTS flow program, the STHTS flow program and the feed water flow program are not included in the MFM model Fig. 5. The transition from superheated generation mode to the "plant control by power demand master" would require extensions of the control functions in the MFM model.

4.2 MFM Model of hot water warming mode

An MFM model of the hot water warming mode is shown in Fig. 6. In order to explain the model it is instructive to make a comparison with the model of the superheated generation mode shown in Fig. 5. First of all it can be seen that the control structures cst1, cst2, cst3, cst5, cst6, cst7 and cst8 are not in the hot water warming mode. Likewise, energy flow structures efs1, efs2 and parts of the functions in Fig. 5 are absent in Fig. 6 because these functions are not relevant for the hot water warming mode since these are functions of the primary and secondary heat transfer systems. The PHTS and the SHTS heat transfer systems are not used in the hot water warming mode where the feed water is heated by an auxiliary boiler when it passes through the feed water heaters. The functions of the auxiliary boiler and the heaters are represented in Fig. 6 by sou31 and tra32.

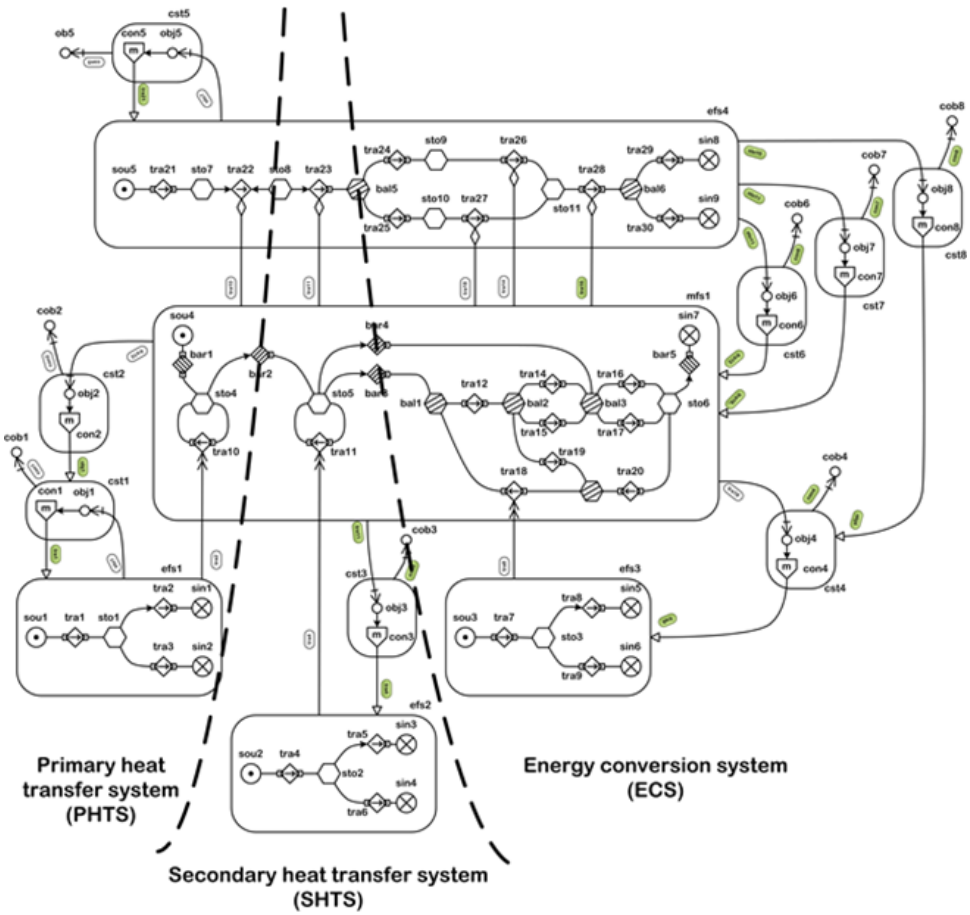

Figure 5: MFM for superheated generation mode (sub-mode of mode B)

Note also that some of the functions in structure mfs1 in Fig. 5 are missing in Fig. 6 because of the different flow paths. In the superheated generation mode energy is transferred by steam from the evaporator to the turbine. In Fig. 6 the corresponding energy transports are absent because no steam is transferred from the evaporator to the turbine in the hot water warming mode. It is seen that the MFM models makes it possible to distinguish quite clearly the essential features of the two operating modes.

5 CONCLUSIONS

The paper gives a short introduction to MFM, defines MFM mode types and describe how they relate to operation modes defined in control engineering. It is shown that the essential features of two selected operation modes for the Japanese fast breeder reactor plant MONJU can be clearly distinguished by their respective MFM models. The paper is the first discussing how MFM can be used for modeling operation modes. Further research will consider the visualization of mode types in MFM. The results presented are important for further development of MFM applications in automation design and for risk monitoring and diagnosis.

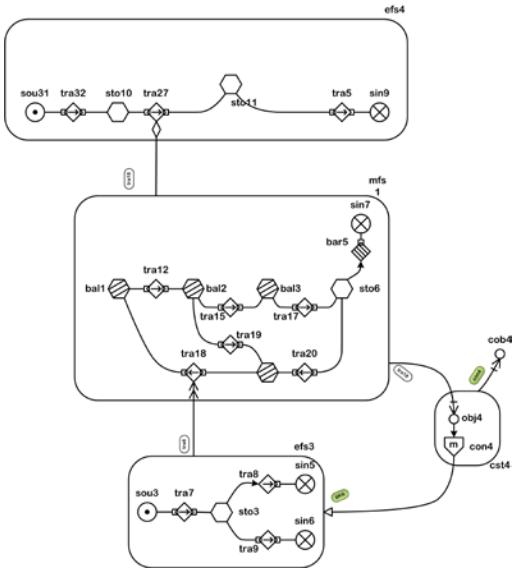

Figure 6: MFM of the hot water warming mode (sub-mode of mode A).

6 ACKNOWLEDGMENTS

This study has been supported by the Chinese 111 project on Nuclear Power Safety and Simulation (b08047).

7 REFERENCES

1. M. Lind, *An Introduction to Multilevel Flow Modeling*. International Journal of Nuclear Safety and Simulation. 2011, Vol 2(1):22-32.
2. M. Lind. *Control functions in MFM*. International Journal of Nuclear Safety and Simulation. 2011, Vol 2, p 132-139.
3. M. Lind. *Reasoning about causes and consequences in multilevel flow models*. Proc. European Safety and Reliability Conference (ESREL) 2011 Annual Conference, 2011. September 18-22, Troyes, France.
4. K. Heussen and M. Lind. *Representing Causality and Reasoning about controllability of Multi-level Flow Systems*. Proc. IEEE International Conference on Systems, Man and Cybernetics. 2010, October 10.13, Istanbul Turkey.
5. H. Takahashi and K. Tamayama. Practice of Operation and Control of Fast Reactor, Chapter 5, Part I Practice of Nuclear Power Plant Control, In: Reactor Dynamic Control and Plant Control, Ed: by Yoshiaki Oka and Katsuo Suzuki, Ohmsha, Tokyo, Japan, 2008: 165-187 (In Japanese).
6. H. Yoshikawa, M. Yang, Z. Zhijian, H. Hashim, M. Lind, K. Tamayama and K. Okusa. *Design concept of human interface system for risk monitoring for proactive trouble prevention*. Proceedings of ICI2011. 2011, August, Daejon Korea.
7. M. Lind, H. Yoshikawa, S. B. Jørgensen, M. Yang, K. Tamayama and K. Okusa. Multilevel Flow Modeling of Monju Nuclear Power Plant. International Journal of Nuclear Safety and Simulation. 2011, Vol 2(3):275-285.
8. M. Lind. *Knowledge Representation for Integrated Plant Operation and Maintenance*. Proceedings of Seventh American Nuclear Society International Topical Meeting on Nuclear Plant Instrumentation, Control and Human Machine Interface Technologies, 2010. November 7-11, Las Vegas USA.