Downloaded from orbit.dtu.dk on: Apr 25, 2024

DTU Library

RTLabOS Dissemination Activities

RTLabOS D4.2

Kosek, Anna Magdalena; Heussen, Kai

Publication date:
2014

Document Version
Publisher's PDF, also known as Version of record

Link back to DTU Orbit

Citation (APA):
Kosek, A. M., & Heussen, K. (2014). *RTLabOS Dissemination Activities: RTLabOS D4.2*. Technical University of Denmark, Department of Electrical Engineering.

General rights
Copyright and moral rights for the publications made accessible in the public portal are retained by the authors and/or other copyright owners and it is a condition of accessing publications that users recognise and abide by the legal requirements associated with these rights.

- Users may download and print one copy of any publication from the public portal for the purpose of private study or research.
- You may not further distribute the material or use it for any profit-making activity or commercial gain
- You may freely distribute the URL identifying the publication in the public portal

If you believe that this document breaches copyright please contact us providing details, and we will remove access to the work immediately and investigate your claim.

RTLabOS Dissemination Activities

RTLabOS D4.2

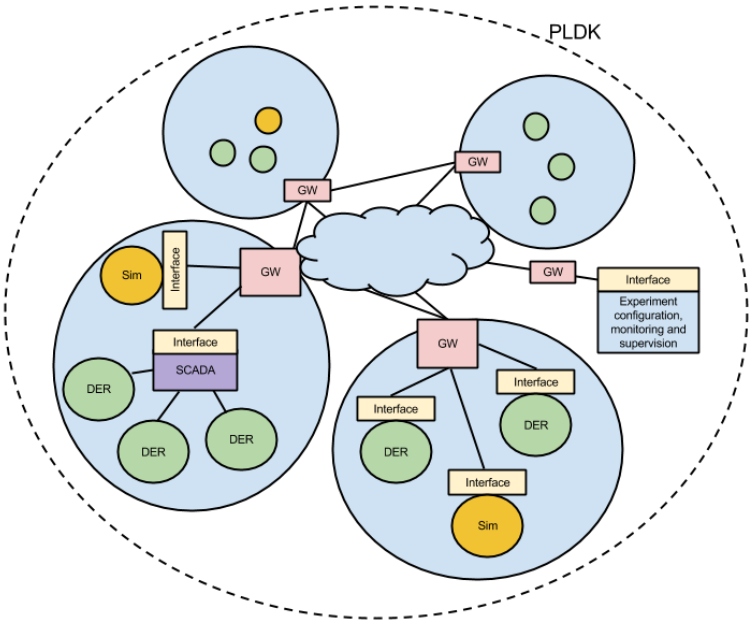

Anna Magdalena Kosek and Kai Heussen

November 2014

RTLabOS Dissemination Activities

Report RTLabOS Phase I: D4.2

November 2014

By Anna Magdalena Kosek and Kai Heussen
Copyright: Reproduction of this publication in whole or in part must include the customary bibliographic citation, including author attribution, report title, etc.
Cover illustration: Anna Magdalena Kosek
Published by: Ledelse og Administration, Anker Engelunds Vej 1, Bygning 101 A, 2800 Kgs. Lyngby
Request report from: www.dtu.dk

Content

1. Introduction 4

2. Workshop summaries 4
2.1 WS 1: Integration Experiences & Kick-off 4
2.2 WS 2: Mini-Conference and Strategy Workshop 9
2.3 WS 3: RTLabOS Dissemination 15

3. Conference publications 17
3.1 PSCC2014 17
3.2 IWIES2014 18
3.3 IECON2014 18

References 19

Appendix A Workshop 2 peer-reviewed Abstracts 20
1. Integrated Control and Design Platform for Electric Power Systems by Arshad Saleem and Davood Babazadeh 21
2. Rapid Control Development Supported by a Loose Coupling Architecture for Heterogeneous Components by Mario Faschang 22
3. SESA-Lab: System-Wide Smart Grid Simulations for Generic Automation Architectures by M. Büscher, S. Scherfke, C. Steinbrink, S. Rohjans and S. Lehnhoff 24
4. Experiences with Power System RT-HIL Control System Implementation and SCADA Integration by M. S. Almas and L. Vanfretti 26
5. A Standard-based Control Approach for Distributed Energy Resources by Filip Andrén, Roland Bründlinger, and Thomas Strasser 31

Appendix B Workshop 2 Recordings 33
1. SCADA systems & Operator Support 33
2. Development, testing and validation using real-time co-simulation 33
3. Prototyping and Development using Co-simulation 34
4. Controller Design & Deployment using 'model-based design' 34
5. Iterative Prototyping and Field Deployment using Interface-oriented integration 35

1. Introduction

One of the key pillars of RTLabOS has been the involvement of local stakeholders and international exchange of experience with other leaders in the development of smart grid labs. Initially, the domain of software for smart grid labs has been huge and incomprehensible, but naturally following from this exchange has been a collaborative process of agenda setting: the exchange of experience and ideas which lead to identification and prioritization of key topics, which have then been addressed in other RTLabOS outcomes, such as Surveys, Feasibility Studies and Use Cases.

This document provides a summary of RTLabOS public dissemination: the workshop activities, attendance and outcomes in Section 2, and work presented to domain experts at international conferences in Section 3.

2. Workshop summaries

The following pages report on the workshops:

1. *Designing the Next Generation of Smart Grid Laboratories: Integration Experiences*
   Invited speakers and discussions establishing the state of the art.
2. *Software Ecosystems for Power System Integration Labs*
   Submission-based invitation of presentations and facilitated workshop.
3. *Smart Grid Labs: Software Infrastructure - Experience & Results from the RTLabOS project*
   Results Dissemination, incl. online broadcast.

2.1 WS 1: Integration Experiences & Kick-off

Title:	Designing the Next Generation of Smart Grid Laboratories: Integration Experiences
Type:	One day workshop, invitation only with sponsored participation
Date:	10 June 2013
Location:	Center for Electric Power and Energy, Lyngby Campus, Bldg. 329 Technical University of Denmark, Department of Electrical Engineering

Workshop description: The RTLabOS ‘Phase I’ project aims to investigate software architecture in ICT-supported power system and smart grid laboratories. In this first workshop the focus will be on sharing experiences and exploring the state-of-the-art and development opportunities. In particular, we are looking for experts with experience in:

- Software architecture for interconnecting lab facilities
- Software development and integration of lab components
- Use cases for complex lab setups involving software and hardware, including, e.g., industrial SCADA systems
- Complex experiments, mixing different data sources and keeping track of setup and measurement data
- Integration of simulation tools & technologies such as real-time simulation, hardware in the loop (HIL), software in the loop (SITL), and cross-domain and co-simulation.

2.1.1 Contributions & Participation

The workshop consisted of four sessions with eleven invited speakers, and discussion inspired by subject posters.

Session 1: Real-time Simulation to SCADA systems for Design, Operation and Testing

- *From Co-Simulation to Deployment with Spirae's BlueFin platform* (Holger Kley, Spirae) In this presentation, we discuss the central features of the BlueFin platform and explore one key feature of Spirae's BlueFin platform in some depth: the ability to transition from a deployment against simulation to a deployment against physical assets with relative ease.
- *Methodologies for Power Protection Relay Testing and Performance: Evaluation of Protection Functions for IEC 61850-8-1 and -9-2* (M. Shoaib Almas and Luigi Vanfretti, Smart Transmission Systems Lab (SmarTS Lab), KTH Royal Institute of Technology, Stockholm, Sweden)
- *A Software Development Toolkit for Real-Time Synchrophasor Data Mediation and PMU Application Development* (Luigi Vanfretti, R&D Division, Strategy and Public Affairs, Statnett SF, Oslo, Norway; Maxime Baudette, Smart Transmission Systems Lab (SmarTS Lab), KTH Royal Institute of Technology, Stockholm, Sweden)

Session 2: State of the Art Labs & Platforms

- *AIT SmartEST Lab - Smart Energy Systems and Technology Laboratory* (Thomas Strasser, AIT) This presentation gives an overview of the SmartEST laboratory and its possibilities.
- *The InteGrid test and development laboratory* (Holger Kley, Spirae) The InteGrid lab is jointly owned and operated by Spirae and Colorado State University. In this presentation, we introduce the lab assets and infrastructure, summarize key use cases, and discuss strengths and shortcomings of the lab.
- *PowerLabDK – A Platform for Research, Innovation and Education* (Jacob Østergaard , DTU) PowerLabDK is a collation of Danish research facilities for electric power and energy. This talk presents the lab features and outlines the current activities associated with it and develops a perspective on challenges for lab integration and future focus areas.

Session 3: Lab Integration experiences and challenges

- *Experiences with DERri JaNDER in AIT Smart Grid Labs and Challenges and experiences using open source software for lab automation* (Thomas Strasser, AIT) This presentation provides an overview using open source tools (i.e., for SCADA, distributed control, Industrial Ethernet) for laboratory automation. Moreover, challenges, experiences and open points will be discussed.
- *SYSLAB – as part of PLDK: Integration challenges and opportunities* (Anna Kosek, DTU) This talk highlights experiences in designing, building, using and extending SYSLAB and raises challenges of integrating it with PowerLabDK.

Session 4: Focus on simulation, software technologies and architectures

- *Requirements and concepts for self-organized cluster of energy units* (Astrid Nieße, OFFIS) Self-organization within power grids comes with new requirements for (real-time) Smart Grid simulation, especially when moving from mere energy market view to system stability issues. In the talk, research questions and first results from current research projects will be presented to give hints to requirements for a RT Smart Grid lab.
- *Concept, architecture and application of the Smart Grid simulation framework "mosaik"* (Sebastian Rohjans, OFFIS) With the core concepts of (a) strong separation of physical entities and their respective control, (b) convenient scenario specification and (c) parallelization of simulation execution, mosaik holds some key characteristics needed for benchmarking of control concepts in the distribution grid. In the talk, the main idea

and the architectural concepts are presented along with examples of mosaik usage within research projects.

- *Experiences with deploying Multi-agents solutions to low-cost hardware platform* (Nicholas Honeth, Industrial Control Systems, KTH) This presentation addresses our experiences with using the JACK multi-agent platform deployed on a group of Raspberry Pi platforms to enable a truly distributed multi-agent platform with basic communication and discovery mechanisms. The presentation also covers plans for further development of the platform.

Workshop participants:

- Peter Palensky (AIT)
- Thomas Strasser (AIT)
- Henrik Bindner (DTU)
- Shi You (DTU)
- Kai Heussen (DTU)
- Anna Kosek (DTU)
- Daniel Kullmann (DTU)
- Jacob Østergaard (DTU)
- Nicholas Honeth (KTH)
- Luigi Vanfretti (KTH)
- Astrid Nieße (OFFIS)
- Sebastian Rohjans (OFFIS)
- Martin Büscher (OFFIS)
- Holger Kley (Spirae)
- Peter Keller-Larsen (Spirae)

2.1.2 Discussion

The discussion followed along the agenda and was initiated by questions posted by the host. Results recording was organized by focus posters prepared by the organizers as frames to record discussion notes.

P1: Lab activities

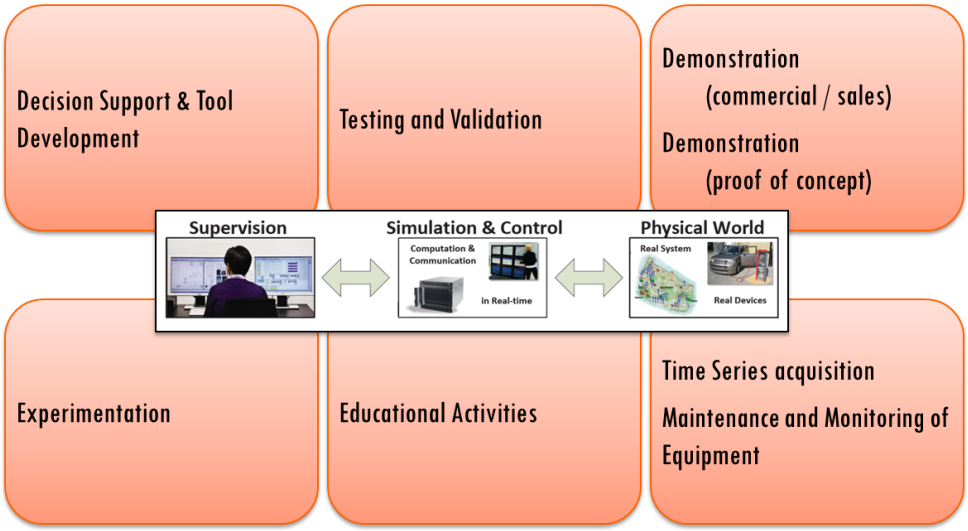

The poster is divided into 8 regions each representing one lab activity: commercial demonstration, proof of concept demonstration, experimentation, testing and validation, maintenance and monitoring of equipment, time series acquisition, decision support and tool development, educational activities.

Questions:

- Can some of the activities be concurrent?
- Can activities be scheduled?
- Can activities be divided into business and research?

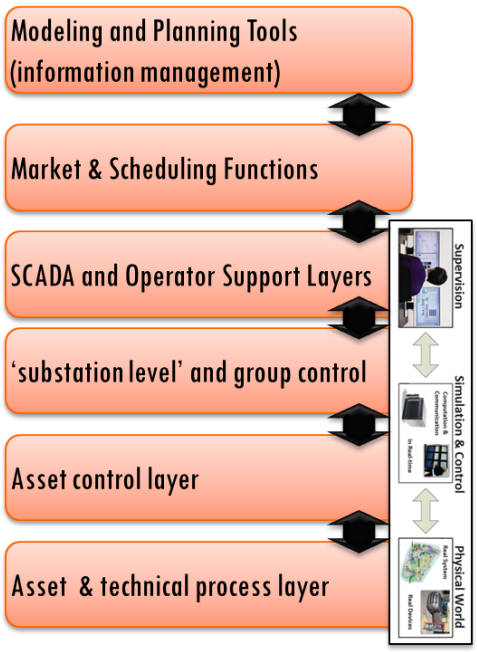

P2: Interoperability and communication

The poster area is divided into layers representing interoperability aspects of automation systems. The layers are: Information management, (e.g. for scheduling / planning / simulation), Markets, Operation (SCADA and Operator support), Substation control level, component and asset control, asset protocols.

Additional questions:

- Where would protocols, custom interfaces and standards from your laboratory fit in the Automation Architecture layers?
- What is the scope of your laboratory in the presented layers?
- Where would future standards and trends that you consider fit in the layered architecture?
- What are the areas/layers that you are considering for future improvements to your lab?

P3: Dealing with complexity and change in the lab environment

The poster area represents a transition between lab processes: from loosely structured to highly formalized. The poster allows participants to place different lab processes on post-ads in areas based on their formalism. Participants are asked to consider how to represent complexity of the lab process. Considered questions:

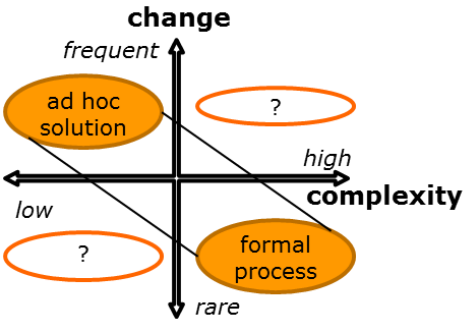

- How standardized are your processes (technical/research)?
- How structured are your processes: loosely structured and ad hoc to formal/standardized process?
- Where are most of your processes now?
- Do you consider model re-use in your process?
- How do you deal with controller compatibility?
- Do you represent and store your data consistently? Do you use data harmonization tools?
- What process for experiment setup and maintenance do you use?
- What processes do you use for contracts and business processes (incl. 'price list')
- Do you use formalized processed for integration tasks (for example ability to include new and outside assets)
- What processes do you use for access control and security?

P4: Complexity scale of experiments

The poster represents two dimensions: scale in number of components and cross-layer and co-simulation with (Power-) HIL

Question:

- Do you practice or consider: off-line co-simulation, real-time co-simulation, hardware emulators?

P5: Criteria for Software
This poster recorded notes on software aspects regarding: diverse vs. single solutions and proprietary vs. 'open source' approaches.
Questions:

- How do you deal with Lab Integrations e.g. of new systems and components?
- Do you consider or have experience with cross-site integration?

P6: Features and Drivers of a future Research lab
This poster provides space on new ideas about lab infrastructure and software.
Questions:

- If you were to develop/purchase/design your software lab again, what would you change?
- What would you add and remove from your laboratory software?
- What would the 'V.2' lab look like? what would you do differently?

2.1.3 Conclusion

This workshop opened the agenda setting activities for the project from the perspective of lab use: the presented research, education and commercial activities, and several technology aspects.

A clear outcome of the workshop was identification of wide gaps between

a) types of 'smart grid labs' in general: there is a large variety of lab uses and lab types in smart grid and distributed energy resources research area adopting different processes to aid different lab activities;
b) the requirements for teaching, commercial use, and research differ significantly;
    a. teaching has a high turnover and requires simplified and well-designed setups
    b. commercial use requires standardized processes and testing methods
    c. research use often employs researchers in the lab and is part of a research project; as smart grid research area is very wide, this activity has high demand for software flexibility enabling running and testing many different experiments in the same lab.
c) there is no single 'state of the art' or even performance indicator for smart grid labs

The first deliverable after the workshop was thus re-defined from "State of the Art" to a "Domain Study" [D1.1], classifying the activities and criteria by which smart grid labs operate. It was further concluded that a small survey should be performed based on the domain study and a small circle of labs, which is reported in [D1.2].

There is a significant 'opportunity cost' (the time to invested to be able to use the setup) in training new staff on complex lab and software setups. This cost is larger, the higher the turnover of lab users is. In particular with teaching, the time of training students to use a lab (even a specific setup) is an essential constraint. This time constraint is typically achieved by dedicated teaching environments (as the KTH low-cost environment reported for example in Session 4), or within the lab, creating a 'student safe' zone with software simplifications and focused improvements and limited functionality; finally, teaching in the lab is only feasible with staff dedicated to supporting students during their lab time and well formulated teaching scope and setup.

Another insight emerging from the discussion was that a key quality metric that a smart grid lab software could be judged by, is the pathway from conception to deployment of controllers. The ease of deployment of controllers has significance to many lab activities, including demonstration, testing, experimentation and teaching.

2.2 WS 2: Mini-Conference and Strategy Workshop

Workshop 2 was organized as an open session with a call for abstracts. The topic was "Software Ecosystems for Power System Integration Labs", and it was held at DTU Risø Campus, Roskilde, Denmark, in context of the PowerLabDK SYSLAB facilities on April 4th, 2014. The invitation was oriented toward practitioners and researchers who work with complex experiments at leading power system integration labs, aiming to share experience and best practices. Focus was placed on an open atmosphere and time for discussions.

The workshop theme was based on a few topics that crystallized from the RTLabOS work from survey, use cases and first feasibility studies:

The Call for Abstracts identified three main topics:

1. Use of common information models and data repositories in the lab context.
2. Integrated control design and validation platforms: handling control algorithms and software between development, simulation, lab testing and field deployment.
3. Lab configuration management and experiment metadata: Creation, storage, retrieval and application of data related to detailed system configuration and external conditions.

Based on received abstracts the workshop was structured into two main sessions, the first focusing on control design and validation (topic 2. above), and the second on software directly supporting lab operations (topics 1. & 3. above), with each session including workshop discussion elements.

2.2.1 Contributions & Participation

The workshop program is outlined in Table 1.

Table 1 WS 2 program outline

Time	Topic
9:00	Reception, Welcome breakfast
9:30	Workshop Introduction Kick-off to Session I with questions & notes for group discussion
9:50	**Session I: The lab as an integrated control design and validation platform** *Kick-off:* Two main applications are considered: 1) the process from design to deployment of controllers, and 2) the testing of control and operator support software (such as SCADA systems). The outcome should be an understanding of the challenges addressed, a classification of resulting requirements, and understanding how the different approaches address these requirements. *Talk-1:* "Experiences with Power System RT-HIL Control System Implementation and SCADA Integration" by Maxime Baudette, KTH *Talk-2:* "Rapid Control Development Supported by a Loose Coupling Architecture for Heterogeneous Components" by Mario Faschang, TU Wien *Talk-3:* "A Standard-based Control Approach for Distributed Energy Resources" by Thomas Strasser, AIT

11:00	**Session I: Breakout discussions**
11:30	**Session I: Plenary Discussion**
12:00	Lunch
13:00	**Session II: Lab software support infrastructure** *Kickoff:* Considerations on software support infrastructures for labs, focusing on common information models and lab configuration management allowing flexible and effective lab operation. *Talk-4:* "Integrated Control and Design Platform for Electric Power Systems" by Arshad Saleem, KTH *Talk-5:* "SESA-Lab: System-Wide Smart Grid Simulations for Generic Automation Architectures" by Martin Büscher, Stefan Scherfke, OFFIS *Talk-6:* "Flexhouse-2: Infrastructure for flexible, user-friendly and fault-tolerant deployment of experimental controllers" by Oliver Gehrke, DTU
14:30	**Session II: Breakout discussions**
15:00	Cake and coffee
15:30	**Session II: Plenary Discussion**
16:30	Workshop Closing

As Talk-6 had to be cancelled due to illness, another participant Morten Lind reported on advances in SOSPO project, and description of flexible software used in for operator visualization. Abstracts regarding the talks are provided in Appendix A.

DTU internal participation was strong and international participants included both speakers and pure participants.

Table 2 WS2 Participants

Person	Institution	Role
Thomas Strasser	AIT	Speaker
Anders Thavlov	DTU	Participant
Anna Kosek	DTU	Organizer
Daniel Esteban Morales Bondy	DTU	Participant
Junjie Hu	DTU	Participant
Kai Heussen	DTU	Organizer
Mattia Marinelli	DTU	Participant
Morten Lind	DTU	Participant
Qi Wang	DTU	Participant
Shi You	DTU	Participant
Thomas Meier Sørensen	DTU	Participant
Yi Zong	DTU	Participant
Arshad Saleem	KTH	Speaker
Maxime Baudette	KTH	Speaker
Cornelius Steinbrink	OFFIS	Participant
Martin Büscher	OFFIS	Speaker
Peter Keller-Larsen	Spirae	Participant
Paul Crolla	Strathclyde	Participant
Mario Faschang	TU Wien	Speaker
Alexander Prostejovsky	TU Wien	Participant
Antonino Riccobono	RWTH Aachen University	Participant

2.2.2 Discussion Notes

As outlined in the workshop program, the workshop discussions were structured into several sessions, combining “breakout sessions” with plenum discussion. During the sessions, notes were taken in a structured format by different colors of post-it notes as well as structured templates. An example of such a poster is provided in Figure 1.While the readability of the posters is limited, due to the structured format the contents will be reported in a table format here.

Session 1: The lab as an integrated control design and validation platform – workshop
The workshop format of session 1 was based on the “world café” concept[1]. This format enables focused discussions in small groups around several topical scopes, while facilitating the exchange of perspectives and recording discussion outcomes.

Each table had a theme, a poster and three-colored post-it notes; for the “recording”, a conceptual frame of different phases of control design and validation was provided outlined as separate columns on a poster (see Figure 1):

1. Concept Design
2. Development
3. Lab Deployment
4. Field deployment

The 5 themed tables were inspired by the kick-off talks and participant interests:

1. SCADA systems & Operator Support (Talk-1)
2. Development, testing and validation using real-time co-simulation (Talk-1)
3. Prototyping and Development using Co-simulation (Talk-5)
4. Controller Design & Deployment using 'model-based design' (Talk-3)
5. Iterative Prototyping and Field Deployment using Interface-oriented integration (Talk-2)

The discussions were facilitated by 3 questions, each associated with a post-it color

- green: **What application steps are needed in this approach?**
- blue: **What issues are critical with respect to these steps?**
- pink: **What challenges & opportunities should be addressed?**

[1] See e.g. http://www.theworldcafe.com/principles.html

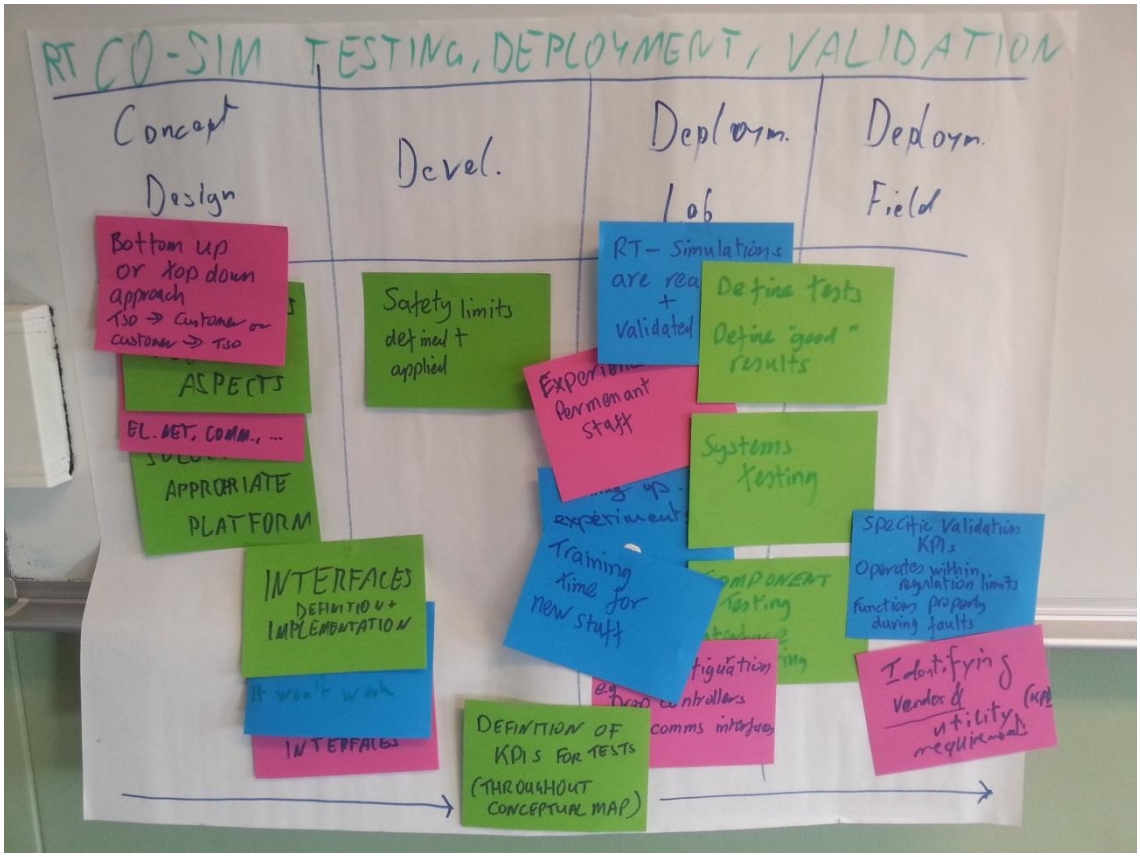

Figure 1 Poster: Real-Time Co-Simulation

The outcome of this discussion is noted in the tables attached in Appendix B.

2.2.3 Session 1 – Plenum Discussion

In the plenum discussion each poster was presented by participants. Afterwards, some key challenges and opportunities were identified:

Challenges:

- Stepping between open source and commercial SCADA-related developments
- Diversity of interfaces (across simulation and real-world) & ”gluing needs”
- Availability of validated real-time simulation models
- Training needs for lab-work, especially in case of RT-(HIL/Co-)-simulation (technical complexity)
- Re-engineering effort when moving between phases
- Formal design/development process may limit possibility of solutions
- Handling of diverse time scales in validation (“stiffness” of simulation and cross-time scale)
- Validation of ”control architecture”

Opportunities:

- Scenario generation driven by validation requirements
- Automatic configuration to replace manual steps (especially in the ‘lab/field’)
- Functional modelling as integration framework between support systems and control design
- Formal notations & progressive use of adopted commercial standards
- Common development environments
- Identify & harmonize ”Gateway Questions” / decision points to delimit design phases

2.2.4 Session 2: Lab software support infrastructure

Session 2 focused on software support infrastructures for labs, including on common information models and lab configuration management allowing flexible and effective lab operation. The kickoff presentation highlighted several technology aspects:

- *Talk-4:* ”Integrated Control and Design Platform for Electric Power Systems” by Arshad Saleem, KTH
- *Talk-5:* ”SESA-Lab: System-Wide Smart Grid Simulations for Generic Automation Architectures” by Martin Büscher, Stefan Scherfke, OFFIS
- *Talk-6:* ”Flexhouse-2: Infrastructure for flexible, user-friendly and fault-tolerant deployment of experimental controllers” by Oliver Gehrke, DTU *(cancelled due to illness) Talk-6:* was replaced by a stand-in lecture on the “SOSPO project and the use of ProcSEE visualization platform for prototyping power system operator support” by Morten Lind, DTU

For the following workshop discussion, topics from the outcomes from Session 1 (prioritized challenges & opportunities) were picked up independently and analyzed in small groups with respect to 3 cards

- green: S*elected opportunity or challenge*
- blue: *Which specific approaches may be taken to address the challenge considered?*
- pink: *How does the suggested approach contribute to improvement or value creation with regard the original issue?*

Green: Opportunity/challenge	**Blue:** Approach / Aspect	**Pink:** Value / Improvement
Functional Modelling as integration framework between operator support & control design	Specification of different levels/domains for functional modelling (e.g. extension of SGAM) Integration of function levels & languages (ontology unification)	Speed-up development Foster interoperability Facilitate intelligent decision-making *… facilitate “Design Patterns”*
Automatic Configuration to replace manual steps (Lab/Field)	Plug & Play (to some extent) Tools & interfaces Standardization	‚Useful in generic context‘
Validating a control architecture	Functional Architecture for • control system • operator support (&EMS) • mapping security requirements Communication Architecture • Topology • Protocols • QoS Processing/computation capacities • Algorithm parallelization & distribution • Embedded or external Reference Models (e.g. for comparability,) • Transmission, distribution • Components • Scope?	Structured validation requirements Coherent results → impact ← → mapping of use cases

	"Validated" models • Quality specification • Validity scope "Boundary conditions" • Events • Interfaces / channels • thresholds	
Diversity of interfaces & gluing need	Focus on limited set of interfaces, clustered by domain-specific requirements, and coordinate focus: • Commonly used Interfaces for labs & simulation (e.g. OPC-DA, IEC 61850 over) • Generic 'high potential' interfaces (e.g. OPC-UA, OpenADR) • Ontology driven Integration frameworks & standards for co-simulation	Difficult to harmonize →harmonized standard (domain dependent!) Focus resources, potential for sharing (open-source) libraries

2.2.5 Conclusion

The workshop concept for activating participants' contributions and recording results proved quite effective. The method allowed complete result recordings which are found above and in Appendix B (p.33).

Some key observations have been:

- Focus on control software development & deployment very strong for participants
- Simulation (support) has a key role, also for lab-oriented development

There are many shared integration issues, including:

- Semantics of data and models
- Clear formulation of development & testing requirements
  - Unclear requirements for smart grid testing
  - No industry standards
- Data integration & connectivity
- Versioning

Finally, there is no silver bullet, and different approaches have been reported to solve integration approaches. The main lines of best practices are either a) "Highly formalized model-based approach" (such as AIT's IEC 61499 approach) or, alternatively the b) "loose-coupling approach" (represented e.g. by SMB). However, every lab decides differently on where to practice formal integration and where to apply loose coupling. However, a common trend is a strong focus on further tool-integration & coupling using both a) and b).

2.3 WS 3: RTLabOS Dissemination

Title: Smart Grid Labs: Software Infrastructure. Experience & Results from the RTLabOS project
Type: Half day workshop consisting of presentations and discussion. The workshop was streamed and recorded.
Date: 21 August 2014
Location: Koch Auditorium, Risø Campus, Technical University of Denmark, Frederiksborgvej 399, 4000 Roskilde, Denmark
Online streaming:
Recordings available online: www.youtube.com // direct link
Channel: Center for Electric Power and Energy

Workshop description: Smart grid laboratory facilities are facing a dual challenge as the complexity of the testing environment and the associated software requirements are growing together with the complexity of the system under investigation.
The project RTLabOS: Phase I explored the evolving requirements of software infrastructure for smart grid labs. Best practice and gaps in the relevant state-of the art have been identified through workshops, survey [D1.2] and analysis. By means of user survey [D2.2], exploratory feasibility studies [D3] and structured use case documentation [D2.1], the current practice, requirements and feasibility of next generation functionality of laboratory software infrastructure have been identified.
The project participants from Spirae and DTU will present their main findings and highlight experiences from the feasibility studies [D3]. In a following discussion, all participants are invited to share their experience and their views on the project results.

2.3.1 Contributions & Participation

The agenda of the workshop was as follows:

Time	Item	Related Materials
13:00 – 13:05	Opening (Henrik Bindner, DTU)	
13:05 – 13:20	Overview of RTLabOS Project and Key Ideas (Kai Heussen, DTU)	[D1.1], [D2.1], [D3]
13:20 – 13:40	Feasibility Studies on Co-simulation and Deploying Control Software in SYSLAB (Anna Kosek, DTU)	[D2.1]: LBP1,8; SUC1a/b,8 [D3]: FS2,3,5-7
13:50 – 14:50	Feasibility Studies on Demonstrating Spirae's BlueFin in PowerLabDK (Holger Kley, SPIRAE)	[D2.1]: LBP2 [D3]: FS1
14:50 – 14:55	Using off-site controllers to for SYSLAB-Internal Demonstrations (Anders Thavlov, DTU)	[D2.1]: LBP3, SUC3 [D3]:FS 9
14:05 – 14:25	RTLabOS Surveys: International Smart Grid Laboratories and DTU Local User profiles (Junjie Hu & Kai Heussen, DTU)	[D1.2] [D2.2]
14:25 – 14:30	Insights from International Workshops (Anna Kosek & Kai Heussen, DTU)	[D4.1]

14:30 – 14:50	Reflections & Highlights from the RTLabOS project (Kai Heussen, DTU)	[D4.1]
14:50 – 15:00	*What does the future hold?* open floor for discussions (Henrik Bindner, DTU)	
15:00 – 16:00	Networking	

Workshop participants:

- Anna Kosek
- Kai Heussen
- Anders Thavlov
- Henrik Bindner
- Yi Zong
- Bo Søborg Petersen
- Junjie Hu
- Mogens Fyhn (Spirae)
- Giuseppe Tommaso Costanzo
- Anders Bro Pedersen
- Katarina Knezovic
- Mattia Marinelli
- Sergejus Martinenas

2.3.2 Discussion Notes

The initial discussion was started from posing two questions: How to transfer supervisory controllers between different labs? Is there any programming environment the can aid this transfer and it is available in the considered timescale (above 1 second feedback control)? The deployment of software controllers in the laboratory mainly rely of choice of interfaces. In the RTLabOS project we have investigated different ways of interfacing the lab. In the case of FS5 a controller was adapted to the standard interface used in the lab, in FS6 and FS7 the laboratory software was extended in order to support standardized (OPC UA) and custom interfaces. It was pointed out that models of the controller, entire architecture and the requirements should be present in order to validate a single solution. If these models and approaches exist, it is possible to validate a single solution in several labs.

The formulation of a problem in higher level models and description is not a common practice in the Power system. A new research in smart grid lab experimentation and deployment is investigating model-based development as a design paradigm. Especially power system services would have to be modeled, so their behavior can be verified and performance evaluated. The formal description of a smart grid solution can be required for a contract with DSO, TSO or BRP. It can be the ground of the service delivery evaluation and used to evaluate the influence of the service operation on system wide faults and blackouts.

IEC61850 was mentioned as a possible interface between a supervisory controller and the laboratory, but it was not part of feasibility studies. While IEC61850 based interfaces have previously been implemented in SYSLAB, this project aimed to explore new, service-oriented interfaces to power system laboratory, which allow a more flexible description of DERs.

Another discussion topic was decreasing the threshold of implementing a controller in a smart grid laboratory, specifically in SYSLAB. The mentioned example involved a distributed control of power system assets. The PhD student leading the experiment in SYSLAB had many problems with the actual implementation in the lab. One of the larger problems was that the simulation of the proposed was implemented in MATLAB and in order to transfer it to the laboratory with distributed software, the software needed to be redesigned. In this case processes and actors from the proposed architecture needed to be parallelized and the software needed to be translated to another programming language (Python). As the MATLAB implementation used global vectors and matrixes to exchange data between actors, communication and date exchange protocols needed to be designed and implemented to facilitate the data exchange between actors running on different computing nodes. In this case the design of the controller architecture had not been aimed at real implementation. Concluding, the development and deployment of smart grid systems can be facilitated by addressing ICT considerations earlier and systematically in the design phase.

2.3.3 Conclusion

This final workshop brought especially PowerLabDK internal users together and the discussions helped promoting the resulting reports. Already clear from the discussions at this workshop is that especially the Use Cases and Feasibility Studies will help training new lab users to pay attention to the complex steps in the lab deployment process. Meanwhile, the utility of an IEC 61850 interface for commercial testing has been stated clearly. While the SYSLAB software offers flexibility for many kinds of experiments, commercial testing is not a primary goal here. For other PowerLabDK parts, this need may be viewed differently and other implementation pathways may be considered.

3. Conference publications

The RTLabOS project findings have been disseminated in the international community researching in ICT in Energy systems. The feasibility studies form RTLabOS project resulted in several conference publications. This section presents these papers.

3.1 PSCC2014

Title: Evaluation of smart grid control strategies in co-simulation - integration of IPSYS and mosaic.

Authors: Anna Magdalena Kosek (DTU), Ontje Lunsdorf (OFFIS), Stefan Scherfke (OFFIS), Oliver Gehrke (DTU), Sebastian Rohjans (OFFIS).

Conference: 18th Power Systems Computation Conference (PSCC2014).

Publication date: August 2014.

Abstract: This paper presents two different aspects considering a co-simulation of smart grid scenarios. First considers representing the control strategy in a separate discrete event simulation developed in a multi-agent platform. This study investigates the design and implementation of such a simulator. Special attention is given to timing issues presenting time variant and time invariant

models. The second aspect presented in this paper is the co-simulation composition, investigating how to integrate a control simulation with other simulators in a co-simulation ecosystem. In this study the attention is given to the co-simulation scheduling, proposing two integration approaches: overall control and separate domain. Results from a proof-of concept implementation are included.

3.2 IWIES2014

Title: Fair division of generation profile and fuel consumption in smart micro-grids.
Authors: Anna Magdalena Kosek and Kai Heussen.
Conference: IEEE International Workshop on Intelligent Energy Systems (IWIES2014).
Publication date: October 2014.
Abstract: Islands and rural areas can decrease their cost of energy by exploiting renewable energy as compared to diesel only generation. Operation of such isolated micro-grids requires allocation of units for grid stability. Depending on the control strategy employed, the fluctuating renewable production leads to more stressed loading conditions of diesel generators. We propose a control strategy employing fair division of generator allocation using a compensation procedure based on social choice methods. A co-simulation set up with separate power system and control strategy simulators is used to provide a proof-of-concept case study of an isolated micro-grid with two wind turbines and three diesel generators. In comparison with a simple master slave allocation, the proposed coordination scheme improves the distribution of fuel allocation by 27,5%, reduces under-load time by 43,5% and decreases the standard deviation of the under-load distribution between individual diesels by 80,7%.

3.3 IECON2014

Title: Model-driven development of smart grid services using SoaML
Authors: Anna Magdalena Kosek, Oliver Gehrke.
Conference: 40th Annual Conference of IEEE Industrial Electronics Society (IECON2014).
Publication date: October 2014.
Abstract: This paper presents a model-driven software development process which can be applied to the design of smart grid services. The Service Oriented Architecture Modelling Language (SoaML) is used to describe the architecture as well as the roles and interactions between service participants. The individual modelling steps and an example design of a SoaML model for a voltage control service are presented and explained. Finally, the paper discusses a proof-of-concept implementation of the modeled service in a smart grid testing laboratory.

References

[D1.1] Anna Magdalena Kosek, Kai Heussen “D1.1 - The Requirements Domain for Laboratory Software Infrastructure”, Department of Electrical Engineering”, DTU, Kongens Lyngby, November 2013.

[D1.2] Kai Heussen and Oliver Gehrke “D1.2 - State of the Art Smart Grid Laboratories - A Survey about Software Use”, Department of Electrical Engineering, DTU, Kongens Lyngby, November 2014.

[D2.1] K. Heussen, A. Thavlov and A. M. Kosek, "D2.1 - Use Cases for Laboratory Software Infrastructure - Outline of Smart Grid Lab Software Requirements", Department of Electrical Engineering, DTU, Kongens Lyngby, November 2014.

[D2.2] J. Hu and K. Heussen ”D2.2 - Survey and Characterization of User Profiles and User Requirements”, Department of Electrical Engineering, DTU, Kongens Lyngby, August 2014

[D3] Kai Heussen, Anders Thavlov, Anna Magdalena Kosek, ”D3 - RTLabOS Feasibility Studies" Department of Electrical Engineering”, DTU, Kongens Lyngby, November 2014.

Appendix A Workshop 2 peer-reviewed Abstracts

Accepted abstracts:

1. Integrated Control and Design Platform for Electric Power Systems by Arshad Saleem and Davood Babazadeh
2. Rapid Control Development Supported by a Loose Coupling Architecture for Heterogeneous Components by Mario Faschang
3. SESA-Lab: System-Wide Smart Grid Simulations for Generic Automation Architectures by M. Büscher, S. Scherfke, C. Steinbrink, S. Rohjans and S. Lehnhoff
4. Experiences with Power System RT-HIL Control System Implementation and SCADA Integration by M. S. Almas and L. Vanfretti
5. A Standard-based Control Approach for Distributed Energy Resources by Filip Andrén, Roland Bründlinger, and Thomas Strasser

Integrated Control and Design Platform for Electric Power Systems

Arshad Saleem and Davood Babazadeh
arshads,davoodb@kth.se
School of Electrical Engineering
KTH Royal Institute of Technology

In transmission and distribution networks, the adoption of generation that uses the renewable resources and storage systems, together with electricity market mechanisms and the expected use of the electric vehicles, lead to complex interactions among different system components. Power system operation is therefore expected to utilize advanced information and communication technology (ICT) to ensure the required reliability level and performances. This need has stimulated the concept of Smart Grid - a broad term used to include the application of two-way secure communication links as well as computer based monitoring, management and protection systems to electrical power grids. In this context, there is a significant interest on the modeling of the interaction between communication networks and power systems by means of development of an offline or pseudo-real test bed. This approach, which is called co-simulation in the literature, can represent the characteristics of both ICT components and the power system operation.

The presentation will include work on a co-simulation platform for wide area monitoring and control system analysis and development (WAMCAD). The WAMCAD platform makes it possible to assess the impact of supporting ICT systems on PMU-based applications and system. This is achieved by combining and implementing components that mimic equivalent components in the real system. The platform described in this work is based on real time simulations that also allow integration of real–world applications within the simulation. It is hoped that the WAMCAD platform can offer realistic insight into the interdependency of power system and the corresponding ICT system models. The performance of the developed platform is assessed by running different scenarios. The results explicitly intend to quantify the effect of communication parameters on the network metrics of data delay.

The second part of presentation will address implementation a new IEC standard IEC 61175 for rapid design, visualization and prototyping in LAB environments. IEC 61175 provides rules for the composition of designations and names for the identification of signals and signal connections. It sets rules and requirements for the designation of signals and to makes recommendations on useful presentations of these. Furthermore it is described in this standard how to handle special information in a system and/or in between systems as “additional information” if needed. A project at KTH is developing reference distribution grid network models. The network model shall be used for verification of earlier developed monitoring (/and control) methods at the department. The verification setup involves interfacing of the network models in OPAL-RT with a prototype SCADA system via OPC standard. The work will evaluate use of IEC 61175 for consistent signal naming in the network model and mapping to the OPC server and to SCADA system. The semantics of consistent signal naming will be utilized to implement advanced visualization, rapid prototyping and semantic reasoning for different monitoring and control application.

Rapid Control Development Supported by a Loose Coupling Architecture for Heterogeneous Components

Mario Faschang

Energy&IT Research Group
Institute of Computer Technology
Vienna University of Technology

faschang@ict.tuwien.ac.at

Abstract

The evolution of classical electric power grids towards smart grids creates a manifold spectrum of new and challenging research tasks. Due to the introduction of ICT and embedded sensor and actuator systems, the future power grid becomes a complex system of distributed systems. Beside the manifold opportunities that arise from the extension of power grid infrastructure (e.g., effective integration of distributed renewable energy sources; power quality maintenance, increase of power line utilisation and several new services like advanced monitoring and metering), several tasks have to be accomplished.

One of these complex tasks—that are mostly new to the energy domain—is the rapid development of control algorithms and systems for low voltage distribution grids. The goal of this task is to efficiently develop control systems for low voltage grids in the laboratories and the seamless deployment to the field. For this task several subtasks have been identified that arise from the characteristics of the problem and which are described subsequently.

Drafting of control concept prototypes A first draft of a control concept is created in an arbitrary environment that provides functionality for quick and easy prototyping and first evaluation. At this step only the intended behaviour of the control concept is modelled while neglecting specific details of the employed algorithm as well as the test environment.

Control concept performance evaluation and selection Out of a set of drafted control concepts, a subset of one or more control concepts is chosen based on the results of a preliminary performance evaluation.

Control concept implementation Assuming that some kind of proof-of-concept or mathematical modelling has been done in the previous step, it is reasonable to begin with the code base for the actual control concept implementation on the intended platform.

Control concept with power grid simulation For a more accurate assessment and further improvement of the control concept it has to be interlinked to approved and established power grid simulators. This allows for controller software in the loop evaluation with a detailed and more realistic simulation of the physical power grid.

Control concept with co-simulation To consider also communication behaviour and environmental influence on the power grid and the control concept, coupling of further simulators has to be done. This enables a holistic modelling of the power grid system under control but also increases simulation complexity due to the coupling of continuous and discrete event simulations.

Control concept with C-HIL emulation Once the control concept's functional integrity is approved it can be transferred to controller hardware. By connecting the controller hardware to the co-simulation environment, the control concept's behaviour can be evaluated under the constraints of the target hardware in C-HIL emulation.

Control concept deployment and operation in the field Once the control concept is deployed to controller hardware and has successfully been tested by C-HIL emulation in the lab, the next step is the active operation in the field. Using various interfaces, the controller's performance can be monitored during its operation in either open or closed loop mode.

Control concept refactoring Sophisticated logging and persistence tools have to be used for comprehensive validation and monitoring of live operation. Feedback from open-loop field tests and corresponding data can be used to refactor and improve control algorithms.

All these subtasks that support the rapid development of control systems are unified in a consistent concept by the author, which has been published in [1].

Many of the mentioned subtasks of the control development process use either commercial or proprietary tools (e.g., power grid, communication or environmental simulators; synchronization, simulation control and persistence units; user interface; etc.). These heterogeneous toolset needs to be interlinked and coupled either with the controller software or the controller hardware. To allow for the interconnections of all the heterogeneous components a socket-based message exchanging middleware—namely the Simulation Message Bus (SMB)—has been developed and presented in [2]. The architecture has been influenced by related projects like OFFIS mosaik, FMI, GridLAB-D and HLA.

The main task for this middleware is the connection of the various simulation software units and the control concept to model message exchange similar to field operation. Therefore, besides the modular and XML-configurable structure, a practical routing mechanism on the basis of message parameters is a key feature. To enable coupling of independent simulators, a synchronization and simulation control unit has been implemented. This unit maintains configuration parameters for all simulators, coordinates simulation or emulation of an arbitrary number of scenarios that can be automatically run in a row, and supervises co-simulation with variable stepsize.

To allow for fast and seamless field deployment of control algorithms, the data structure and data distribution of the SMB has been designed similar to components in actual field scenarios. Thus, designed control algorithms can directly be operated on field hardware without re-implementation, which is very beneficial concerning development time and error prevention. In this case the SMB performs data distribution between the control algorithms and the power grid sensors and actors which are accessible via an IEC 60850-5-104 stack implementation connected to the SMB. Due to the socket-based structure of the SMB, co-simulation can be distributed among several (virtual) machines to exploit maximum available computational power. Furthermore, the control concepts that are already deployed to controller hardware can be interlinked to the co-simulation via the SMB—thus, enabling controller system evaluation by C-HIL. For developer convenience, a user interface has been created for the SMB, which is connected via RESTful web services and thus can be accessed from any TCP/IP connected machine. This interface offers visualisation, remote control and data export capabilities, both for the development and the grid operation phase of control concepts.

Summarizing it can be said that, with the SMB, a very flexible and versatile middleware has been designed. It supports all the steps of the rapid control development for networked smart grids that were previously introduced. These steps have been merged to a holistic control development process that uses the SMB as its core element.

Keywords

Active low voltage grids, Control development, Co-simulation, Controller hardware in the loop

References

[1] Mario Faschang, Friederich Kupzog, Ralf Mosshammer, and Alfred Einfalt. Rapid Control Prototyping Platform for Networked Smart Grid Systems. In *IECON 2013-39th Annual Conference on IEEE Industrial Electronics Society*. IEEE, 2013.

[2] Ralf Mosshammer, Friederich Kupzog, Mario Faschang, and Matthias Stifter. Loose Coupling Architecture for Co-Simulation of Heterogeneous Components - Supporting Controller Prototyping for Smart Grid Applications. In *IECON 2013-39th Annual Conference on IEEE Industrial Electronics Society*. IEEE, 2013.

SESA-Lab: System-Wide Smart Grid Simulations for Generic Automation Architectures

M. Büscher, S. Scherfke, C. Steinbrink, S. Rohjans and S. Lehnhoff
OFFIS – Institute for Information Technology, Escherweg 2, 26121 Oldenburg, Germany

Motivation and Introduction

Due to today's changes in energy systems the demand for Information and Communication Technologies (ICT) is necessarily increasing. These ICT-systems provide with support in different areas, e.g., they allow an active monitoring of complex systems and can be operationally integrated in existing control systems, so that they can be used for strategic grid extension planning, management of volatile feed-in, grid-related effects such as impacts on the voltage level, outage management, and dimensioning capacitive limits of grid equipment. In general, based on ICT-systems management of prospective complex energy systems can be realized [1].

The existing infrastructures lead to heterogeneous starting situations for ICT system implementation because of enormous extent and strongly differing maturity and age. Thus a socio-economic-technological overall system containing ~~of~~ highly heterogeneous subsystems and components has to be analyzed.

In such interconnected systems causal effect-relationships cannot be identified by implication. Interdependencies between high numbers of active components can rather be analyzed a priori. With it the performance and adequacy of chosen technologies is only revealed during their later operation. For this reason, software-based simulation tools become indispensable for systematic analysis and complexity reduction.

Although, a variety of established tools for analysis of power systems already exists, it is in the medium term very unlikely that one of these tools alone will provide all functionalities and models that are required to simulate future Smart Grids in all its facets. This is mainly due to the high number of Smart Grid use cases, actors, and technologies to be integrated that is not known from other industries so far. Accordingly, a mixture of various different and established tools will be required. These, again, have to be composed in use cases specifically to complex and system-wide scenarios. Therefore, tools such as simulation platforms and –suites are required that are additionally capable of integrating software- and hardware models and components.

The Simulation Framework mosaik

The mosaik framework [2] allows to compose existing models to complex scenarios in a common context, in order to simulate Smart Grids system-wide and to evaluate control strategies. Therefore, a time discrete approach has been chosen that is suitable for analysis in the stationary frequency domain. The mosaik concept mainly addresses the following four goals: syntactic & semantic interoperability of the composed models, semantic-based validation of the orchestrated scenarios, rule-based scenario modeling, and agent-based control strategy integration. Therefore, the mosaik framework provides a number of design artifacts (APIs, meta-models, and algorithms) rather than a methodology. The overarching idea is the separation of physical topology and informational topology as well as their interconnection through a well-defined interface. The physical topology involves the power grid itself and the different resources that have a physical (usually electrical) connection to the grid. It also involves other models that have a non-electrical physical connection to the resources, such as climatic models (e.g., sun irradiation models). The informational topology comprises all other aspects of the Smart Grid, such as MAS-based control, power market- or communication infrastructure simulations (see Figure 1).

Finally it has to be pointed out, that mosaik does not aim to provide a modeling mechanism or language for describing the behavior of models and that the definition of control algorithms is not part of the mosaik concept as well. These are external units that are to be tested with mosaik but not developed with it.

Integrated Concept of the SESA-Lab

During the next step, the concept of the „Smart Energy Simulation and Automation Lab" (SESA) aims at an integration of the mosaik software with appropriate hardware components (see Figure 2). The core hardware component is an OPAL RT-system that enables dynamic real-time simulations. Thus, it realizes the interface to stationary simulations executed with mosaik. Furthermore, various Programmable Controllers (PLCs) are installed in order to specifically emulate particular components in real-time. Control concepts like for example Multi Agent Systems (MAS) can be evaluated in iteratively (?) optimized based on this solution.

In general, the integrated concept allows for analyzing large-scale scenarios taking into consideration both, stationary and dynamic simulations in real-time. The focus is on research questions addressing agent-based provision of ancillary services, agent-based adaptive protection systems, frequency-domain control (>1 s) meets time-domain phenomena (<1

s), co-simulation of real-time and non-real-time components/systems, co-simulation of time-domain/frequency-domain „signals“, simulation of „complete“ process-/communication-chain in Smart Grids, etc.

Summary

This contribution provides an integrated and integrative lab concept for system-wide simulation of complex scenarios for heterogeneous energy systems. The particularly added value of the concept is the combination of software components (mosaik) with appropriate hardware components (OPAL RT, PLC, etc.) that allows for simulating generic automation architectures. Thus, besides rather technical component models from the areas Smart Grid, Smart Cities, or Hybrid Energy Grids also economic market models and sociological behavior models as well as environment models can be composed to complex scenarios. The feasibility of the lab concept will be shown based on a representative show case.

Literature

[1] Lehnhoff, S.; Mayer, C.; Rohjans, S.: “Simulation als Planungswerkzeug für zukünftige Energiesysteme – Herausforderungen und Chancen,” et – Energiewirtschaftliche Tagesfragen, 12/2013.

[2] Schütte, S.; Scherfke, S.; Tröschel T.: “Mosaik: A framework for modular simulation of active components in Smart Grids”. In 1st International Workshop on Smart Grid Modeling and Simulation (SGMS), 2011.

Abbildung **1**: Architecture of the mosaik-Framework

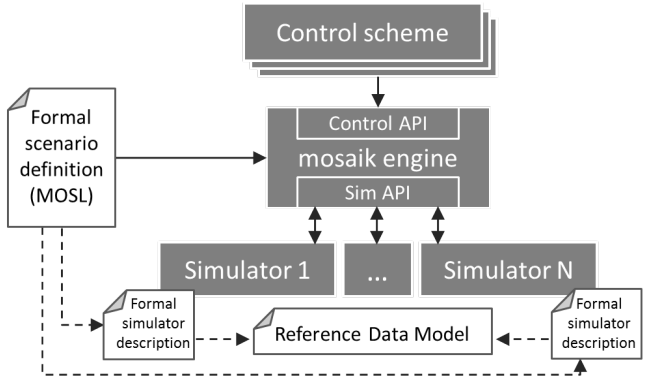

Abbildung **2:** Integrated concept of the SESA-Lab

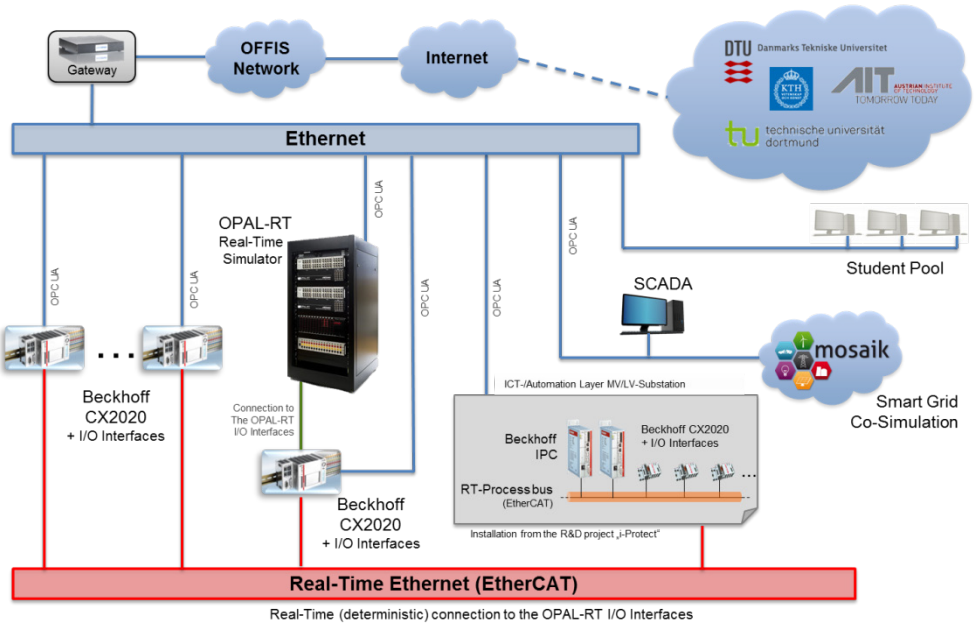

Experiences with Power System RT-HIL Control System Implementation and SCADA Integration

M. S. Almas and L. Vanfretti
SmarTS-Lab, Division of Electric Power Systems, KTH Royal Institute of Technology
Stockholm, SE10044 Sweden

***Abstract*-This article summarizes the list of activities carried out in Smart Transmission System Laboratory (SmarTS-Lab) within the domain of Real-Time Laboratory Infrastructure (RTLabOS). We present our experiences with two different approaches for control system implementation, one using commercial devices and other using customizable devices. The first approach consists of real-time hardware-In-the-loop (RT-HIL) execution of Unitrol 1020 Excitation System from ABB. The performance of Excitation Control System is validated for both Automatic Voltage Regulator (Auto) and Field Current Regulator (Manual) modes. In addition the power system stabilization (PSS) capability of Unitrol 1020 is exploited by using it as RT-HIL to provide power oscillation damping in a 2-area 4-machine Klein-Rogers-Kundur's power system. In the second approach, Compact Reconfigurable I/O (cRIO) controllers from National Instrument are programmed in Labview as a phasor based power oscillation damping controller. This NI-cRIO takes the voltage and current phasor measurements from PMUs (which are executing as RT-HIL with Opal-RT) and outputs a power oscillation damping signal which is added in the controls of SVC (simulated in real-time) to provide power oscillation damping. Finally we investigate how to perform an end-to-end integration of synchronized phasor measurements into the conventional SCADA system. To this end, the Open Source SCADA is setup in the SmarTS-Lab using PMUs/protection relays from ABB and SEL. The integration of PMU measurements in the SCADA system is evaluated and the limitations are discussed.**

I. Introduction

During last Workshop of RTLabOS, KTH SmarTS Lab presented a toolkit developed in Labview that unwraps the synchrophasor stream from individual PMUs or PDCs and provide access to real-time raw data of phasor/analog/digital quantities as being streamed out by PMUs/PDCs in Labview environment [1]. The overall architecture of SmarTS Lab RT-HIL platform was presented along with main emphasis on applications related to power protection relay testing and performance evaluation of protection functions for IEC 61850-8-1 and -9-2 were discussed. SmarTS-Lab also presented the developed wide area monitoring application which can execute on any smart phone or tablet. These smart applications use synchrophasor measurements from PMUs/PDCs to provide a graphical visualization of the status of the power system. For RTLabOS Workshop 2014, KTH SmarTS-Lab will be presenting three major activities which include (1) RT-HIL execution of Unitrol 1020 Excitation Control System with Opal-RT real-time simulator, (2) Implementation of Power System Stabilizer (PSS) and Power Oscillation Damping (POD) algorithms in FPGA of National Instrument based compact reconfigurable I/O systems (cRIOs) for damping low frequency inter-area electromechanical oscillations, (3) Setting up of an open source SCADA in SmarTS-Lab using PMUs/relays from SEL/ABB and integrating PMU measurements in conventional SCADA for early-warning services.

The article is organized as follows: Section II presents RT-HIL simulation results for ABB's Unitrol 1020 Excitation Control System (ECS). Section III discusses development and validation of custom real-time controllers to provide inter-area oscillation damping. The performance of open source SCADA integration of PMU data and applications with the SCADA system is presented in Section IV. Finally in Section V, conclusions are drawn and future work is summarized.

II. RT-HIL Execution of ABB's Unitrol 1020 Excitation Control System

Unitrol 1020 is an automatic voltage regulator (AVR) to provide excitation of indirectly excited synchronous machines and rotors [2]. The primary purpose of the device is to maintain generator's terminal voltage while taking into account all the operational limits associated to the generator [3-5]. The regulator can also be switched over to function as field current regulator (Manual Mode), reactive power or power factor regulator. A typical generator receives mechanical power input from a turbine and its field excitation is provided by an excitation control system. Terminal voltage of the generator is fed to the excitation system which compares this value to the set-point (reference voltage) and computes required field current for bringing the terminal voltage equal to the reference value.

Figure 1 shows the test setup for RT-HIL simulation of Unitrol 1020 ECS. A single machine power system with controllable load is simulated in real-time using Opal-RT real-time simulator. The terminal voltage and stator current of the simulated generator is fed to the Unitrol 1020 ECS through analog outputs of the RTS. As RTS can only provide voltages upto ±10 V and currents upto ±20 mA [6], these low-level signals are amplified using linear amplifiers [7] to scale voltage upto 100V and currents to 1 Ampere at rated condition. The field current of the simulated generator is supplied to Unitrol 1020 using low-level (±10 Volts) signals. For this purpose one of the analog inputs of Unitrol 1020 is configured for receiving external excitation current. The complete connection diagram is shown in Figure 1. Unitrol 1020 compares the terminal voltage of the generator with the reference voltage and provides field voltage to the generator while taking into account that the excitation current of the generator doesn't hit its limits. PID controller of automatic voltage regulator in Unitrol 1020 can be tuned by using CMT 1000 software.

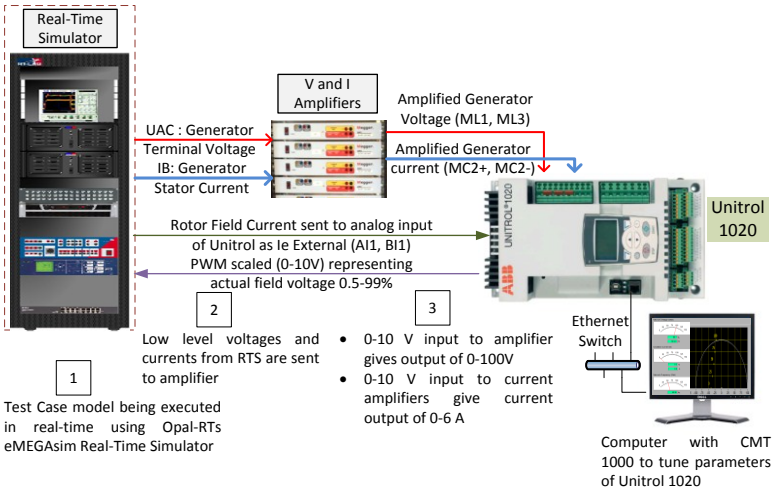

Fig. 1. Connection Diagram for interfacing Opal-RT with Unitrol 1020

In order to evaluate the performance of ECS, the load was increased incrementally. Figure 2 shows the generator characteristics when subjected to disturbances (increase in load). The Excitation is provided by Unitrol 1020 in Automatic Voltage Regulation (Auto) Mode. It can be analyzed that the generator terminal voltage (bottom right plot) is at 1 pu. The field voltage input provided by Unitrol 1020 (top left plot) increases with the increase in load to keep terminal voltage of generator strictly to 1 pu. Similarly the tests were carried out for field current regulator (Manual Mode) in which case, the Unitrol ECS keeps a constant field voltage output to simulated generator, even when the generator terminal voltage decreases due to increase in load. Power System Stabilization (PSS) capabilities of Unitrol 1020 were explored by simulating a 2-area, 4-machine Klein-Rogers-Kundur's power system [10] in RTS with Unitrol ECS as HIL. In this scenario, Unitrol ECS successfully damped an inter-area oscillation of 0.64 Hz. These results will be presented during the workshop.

TABLE 1
DISTURBANCES INCORPORATED IN THE TEST CASE SYSTEM
(AUTOMATIC VOLTAGE REGULATION MODE)

Event	Instance (sec)	Disturbance	Change in Load
1	t = 0	Simulation starts (no load)	0
2	t = 47.1	ABB Excitation System takes over	0
3	t = 108.9	Load increase 10 MW and 10 MVAR	+10MW, +10MVAR
4	t = 171.3	Load increase to 20MW & 10 MVAR	+10MW
5	t = 222.0	Load increase to 30 MW & 10 MVAR	+10MW
6	t = 272.4	Load increase to 35 MW & 10 MVAR	+5MW
7	t = 319.5	Load increase to 35 MW & 15 MVAR	+5MVAR
8	t = 407.1	Load increase to 37 MW & 15 MVAR	+2MW
9	t = 482.1	Load cut off (no load condition)	-37MW, -15MVAR

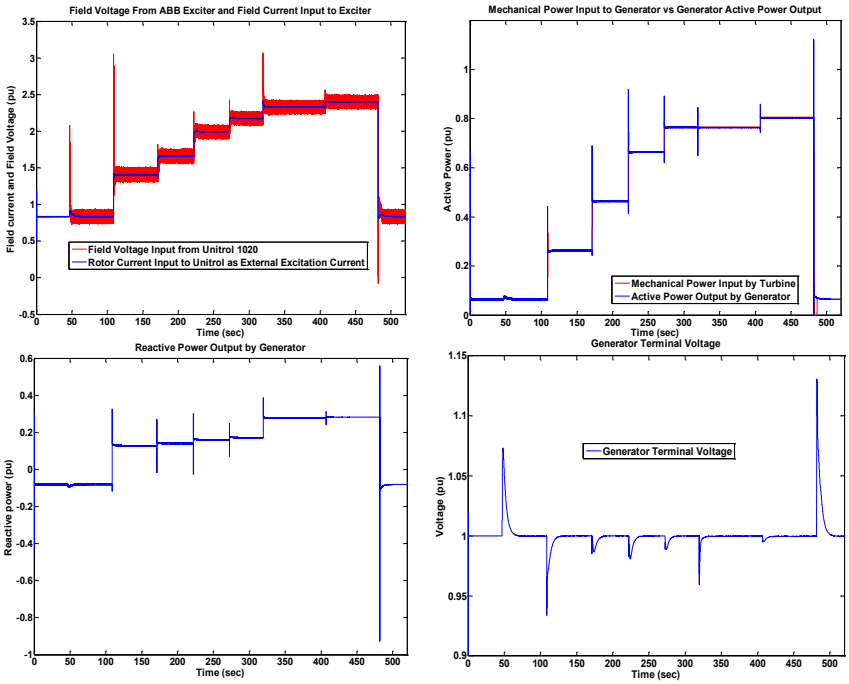

Fig. 2. Single line diagram of test case model developed in MATLAB/Simulink for RT-HIL execution of Unitrol 1020.

III. Development of Custom Power System Damping Controllers

In a second approach for power system control techniques for damping inter-area oscillations, two different types of PSS (delta-speed, delta-accelerating power) [8] and phasor based power oscillation damping (POD) [9] algorithms were deployed in National Instrument based Compact Reconfigurable I/O controllers (cRIOs).

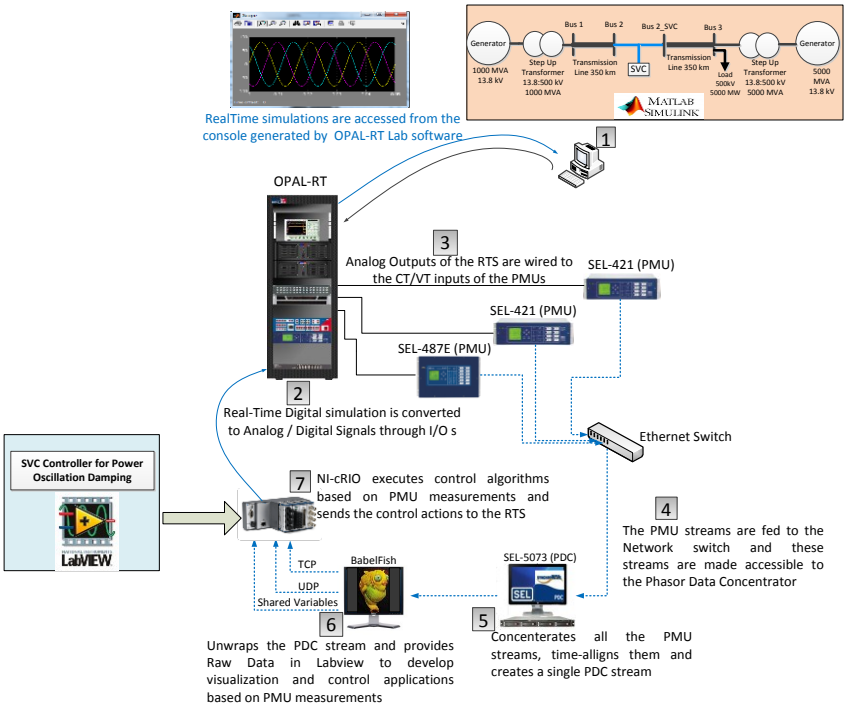

Fig. 3. RT-HIL implementation of PSS and POD controller deployed in NI-cRIO.

In order to evaluate their performance, a Klein-Rogers-Kundur's power system [10] was executed in real-time using Opal-RT real-time simulator. The voltages and currents at the midpoint of the test case model were sent to PMUs to generate synchrophasor measurements. These synchrophasor measurements were received in synchrophasor toolkit [1] (discussed in Section I) to access raw phasor data. Finally this data was imported in cRIOs to execute PSS and POD algorithms to generate damping signals. These damping signals were fed back to excitation system of generators (in case of PSS), and to the controllers of Static VAR Compensators (in case of POD) to provide inter-area oscillation damping in the test case model being simulated in real-time. Figure 3 shows the overall RT-HIL procedure for validating the performance of custom power system controller.

Figure 4 shows the response of test case model when a 5% magnitude step is applied at the reference voltage of Generator 1 at t=20 sec in presence of Phasor POD (as RT-HIL deployed in NI-cRIO) and SVC (installed at midpoint of the test case model executing in Opal-RT). Rotor angle deviation (left), power transfer from Area 1 to Area 2 together with SVC susceptance and reactive power injections (middle) and rotor speed of all the generators (right) are shown. Inter-area oscillation of 0.64 Hz is adequately damped. The comparison of NI-cRIO based oscillation damping controller (hardware) with Simulink based controllers (software model) will be presented in the RTLabOS workshop.

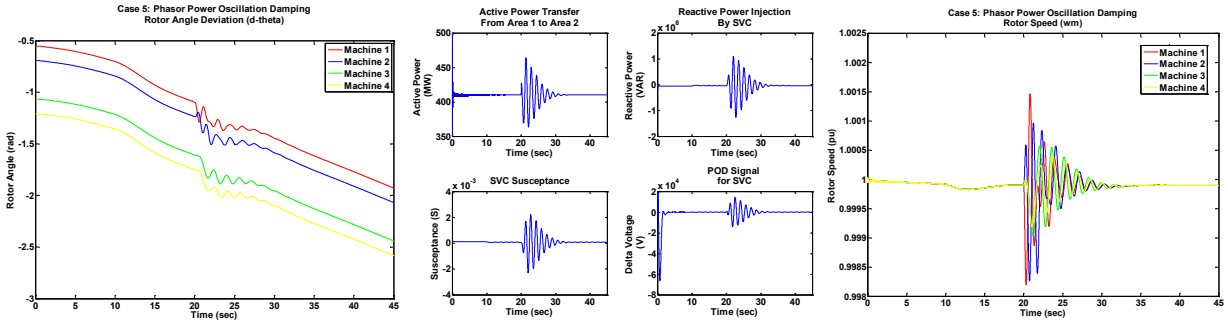

Fig. 4. RT-HIL implementation of PSS and POD controller deployed in NI-cRIO.

III. Open Source SCADA Setup in SmarTS-Lab

Open Source SCADA (SCADA BR) [10] is recently installed in KTH SmarTS Lab. Iis a web-browser based SCADA that enables the user to access monitoring, control and automation equipment over multiple protocols. For implementation, protection relays from SEL [11] and ABB are configured as DNP3 outstations to act as slaves and SCADA BR which is installed in one of the workstations in the laboratory acts as master. The evaluation of SCADA BR has been performed by executing a power system model in a real-time simulator and coupling its analog outputs with the protection relays. This enabled us to analyze the issues of integrating PMU measurements in the SCADA system. The limitations of the SCADA systems to fully utilize PMU data will be discussed during the workshop. Figure 5 show the early warning advantage of integrating PMU measurements in the open source SCADA. It is worth noticing that PMU measurements (blue plot) shows the trace of increasing current and raises the alarm (fundamental current has exceeded). Current magnitude could not be traced in SCADA measurements due to their less resolution (refresh rate).

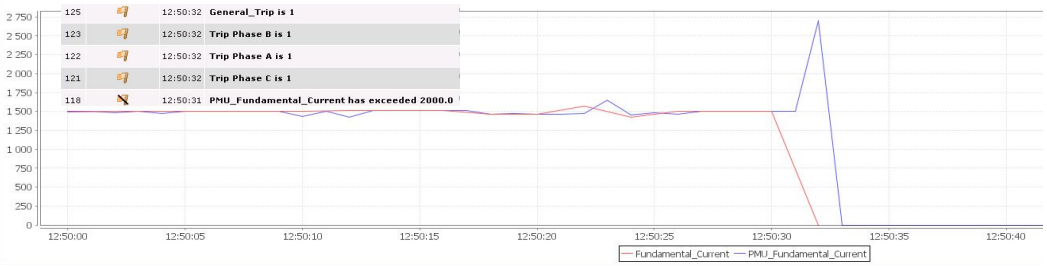

Fig.5: SCADA monitoring of fundamental current measurement received from DNP3 and PMU (IEEE C37.118) protocols

ACKNOWLEDGMENT

The generosity of Nordic Energy Research for providing technical and financial support through STRONg^{2}rid project is deeply acknowledged. The generosity of Schweitzer Engineering Laboratories, Pullman, WA, USA; ABB Substation Automation Products, Västerås, Sweden; Megger / Programma, Täby, Sweden; Opal-RT , Montreal; and National Instruments, Oslo and Stockholm; for their donation of different hardware and technical support is deeply acknowledged.

REFERENCES

[1] L. Vanfretti, V. H. Aarstrand, M. S. Almas, V. S. Perić and J. O. Gjerde , "A Software Development Toolkit for Real-Time Synchrophasor Applications", IEEE Powertech 2013, Grenoble, France, June 2013
[2] ABB-Unitrol 1020 Automatic Voltage Regulator, available online: http://tinyurl.com/Unitrol
[3] IEEE Committee Report, "Computer representation of excitation systems, " IEEE Trans. on Power Apparatus and Systems, vol. PAS-87, pp. 1460-1464, Jun. 1968.
[4] IEEE Committee Report, "Excitation system models for power system stability studies, " IEEE Trans. on Power Apparatus and Systems, vol. PAS-100, pp. 494-509, Feb. 1981.
[5] M. Klein, J. Rogers, S. Moorty and P. Kundur: "Analytical investigation of factors influencing PSS performance," IEEE Transactions on Energy Conversion, Vol. 7 , No 3, September 1992, pp.382-390
[6] Opal-RT, " eMEGAsim PowerGrid Real-Time Digital Hardware in the Loop Simulator", Available online: http://www.opal-rt.com/.
[7] " Current and Voltage Amplifiers by Megger," available on-line: http://www.megger.com/cae/story/Index.php?ID=527.
[8] R. Grondin, "Modeling and closed-loop validation of a new PSS concept, the multi-band PSS", IEEE Power Engineering Society General Meeting, 13-17 July, 2003, Toronto, Canada
[9] L. Angquist and C. Gama, " Damping algorithm based on phasor estimation", IEEE Power Engineering Society Winter Meeting, 2001, Vol. 3, pp. 1160-1165
[10] P. Kundur, Power System Stability and Control, McGraw-Hill, 1994, Example 12.6, p. 813
[11] "Open Source- Web Based SCADA-SCADA BR", documentation available online: http://www.scadabr.com.br/
[12] SEL, "Protection Relays by Schweitzer Engineering Laboratories," available on-line: http://www.selinc.com/protection/.

Extended Abstract

A Standard-based Control Approach for Distributed Energy Resources

Filip Andrén, Roland Bründlinger, and Thomas Strasser, *Senior Member, IEEE*
AIT Austrian Institute of Technology, Energy Department, Vienna, Austria
{filip.andren, roland.bruendlinger, thomas.strasser}@ait.ac.at

***Index Terms*—Automation, distributed control, distributed power generation, distributed energy resource, IEC standards, open source software, power system management, Smart Grids.**

I. Introduction and Motivation

The massive deployment of Distributed Energy Resources (DER)—e.g. Photovoltaic (PV) systems, wind turbines, biomass, small hydro power plants—in recent years has led to a fundamental paradigm change in terms of operation and planning of the electric power system [1], [2]. Today, electricity generation from PV and other renewable sources has become visible also on the transmission system levels, creating an additional challenge for the management of the electricity system, mostly due to the large numbers of systems, the variable power output and uncoordinated response to changing conditions of the power grid [3].

With levels of PV reaching or already exceeding the hosting capacity of the grids in a number of regions and countries (e.g., Germany, Italy), the need for effective integration into the system is even more becoming critical for further deployment of such distributed generators [4]. Smart Grids are one of the most promising solutions to use the existing grid infrastructure in a more efficient way, thus allowing higher penetration levels of PV and DER [1]. To capture the possible benefits of intelligent grids for DER, it will be necessary to develop new operation and control strategies to effectively manage and control the large numbers of dispersed generation systems and utilize the "smart" capabilities which could be provided by inverter based DER such as PV [5]. Communication standards, protocols and common services play a key role to implement this smart and coordinated system approach [6].

One of the most promising solutions for standardized information exchange between distributed DER and the system operator is based on the IEC 61850 [7] interoperability approach. Originally developed for substation automation, IEC 61850 has been enlarged to cover also power utility equipment and DER functions [8].

The main aim of this work is to introduce an approach for the implementation of networked DER device controller functions using the IEC 61850 [7] interoperability standard for power utility automation and the distributed control standard IEC 61499 [9] in order to achieve an open, interoperable and scalable solution. With this distributed control approach advanced DER functionalities are becoming accessible in a standardized way and making them ready for the integration into a future Smart Grid. A special focus of this work will be also on the open source-based realization of the proposed IEC 61850/IEC 61499 distributed control approach as well as testing it in PV-inverter systems. Moreover, the validation of such approaches in the laboratory environment plays an important role which is also covered by this work.

This extended abstract provides a brief overview of the proposed open source-based distributed control approach. It is planned to present the following contributions in more detail during the RTLabOS II Workshop:

- Detailed description of the standard-based distributed control approach using IEC 61850 and IEC 61499 for DER components applied in future Smart Grids,
- Architecture and implementation details of the open source-based control solution,
- Presentation of the realized usage of the control approach for the remote control of a PV-inverter systems, and
- Performed tests in the AIT SmartEST laboratory.

The rest of this extended abstracts covers a brief discussion of proposed approach and achieved results. Moreover, also conclusions are provided.

II. Proposed Approach

As stated by the IEC Smart Grid Strategic Group (SG3) [10] Intelligent Electronic Devices (IED) are one of the major preconditions for the realization of Smart Grids. In this context the IEC 61850 approach plays a major role for the standardized information and data exchange but it defines only interfaces to control and protection functions and high-level communication protocols. The implementation of such functions and services is not really covered by this important Smart Grid standard.

The above mentioned IEC 61850/IEC 61499 integration has already been proven as a way of maintaining a consistent information model throughout the design for Smart Grids applications [9]. Using this approach for collaborating DER controllers an appropriate distributed control concept for DER devices is needed which is introduced by this work. The IEC 61850 Logical Device (LD) and Logical Node (LN) specifications are implemented using the IEC 61499 device and function block model. The encapsulation of these control algorithms and communication services into IEC 61499 elements results in a modular and reusable implementation

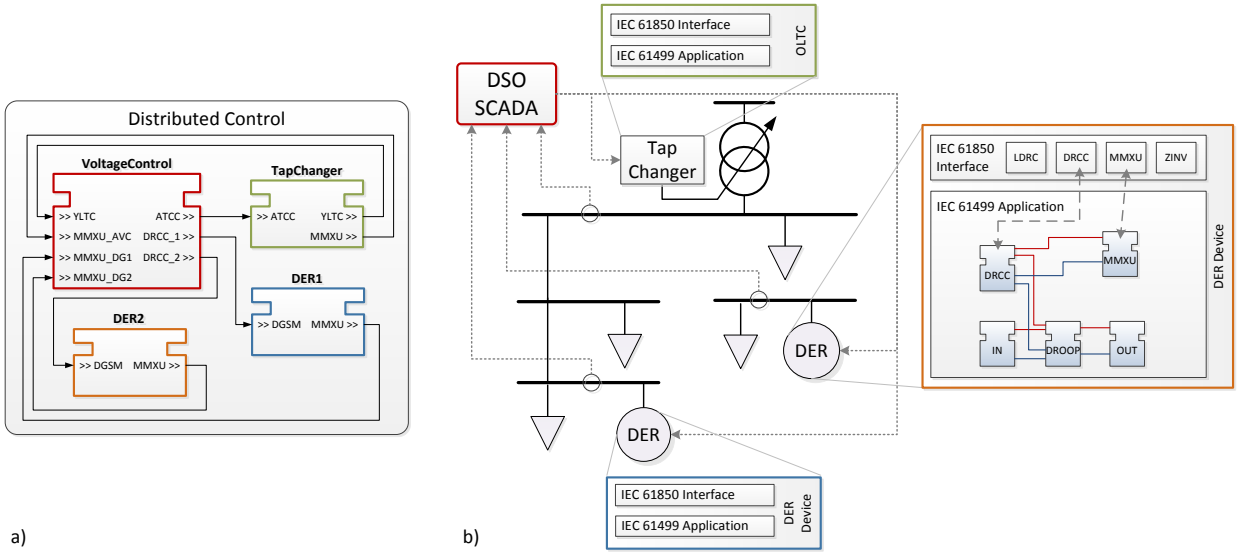

Fig. 1. IEC 61850/IEC 61499 standard-based distributed control approach for DER: a) platform independent modeling of the control application, b) distributed execution of the application on DER.

for realizing standard-compliant distributed control concepts in power and energy systems.

Fig. 1 provides an overview of the proposed concept. In the left hand side of this figure the platform independent modeling of the control application (e.g., coordinated voltage control) with IEC 61499 function blocks is represented. In a further step the control application has to be assigned to different DER devices and components in the power system as represented in Fig. 1b. For the communication between the components the IEC 61850 specification is being used.

An important part of the above introduced approach is the availability of an IEC 61499 function block library for the implementation of IEC 61850 services into the DER devices. Usually such services are executed on embedded hardware—as part of the DER devices—with limited capabilities (restricted computation power, low amount of memory, etc.). A crucial point was the lightweight implementation of the control functions on the resource limited hardware. Moreover, the IEC 61850 communication services have also been encapsulated into special IEC 61499 communication blocks. Together with a set of additional function blocks accessing DER device I/Os, a powerful and standard-compliant DER control library was derived.

III. Results and Conclusions

The above presented approach has been prototypically implemented using the IEC 61499 open source project 4DIAC. For the IEC 61850 communication and interoperability services a freely available stack implementation has been integrated into 4DIAC forming a standard-compliant distributed control platform for Smart Grid devices. In order to validate this distributed control approach it has been applied for the control of different PV-inverter systems (i.e., 20 kVA domestic size and 680 kVA large-scale) in the AIT SmartEST laboratory with the advanced IEC 61850-90-7 compliant functionality.

With the proposed open source-based control approach it is possible to equip DER devices and make them ready for IEC 61850 compliant control in future Smart Grids. Moreover, this approach can also be used as kind of a gateway to upgrade existing DER devices with remote control features but proprietary communication interfaces. This allows the system operator to manage a large number of DER devices in a unified way and capture the potential benefits of inverter based DER at reasonable costs.

References

[1] H. Farhangi, "The path of the smart grid," *IEEE Power and Energy Magazine*, vol. 8, no. 1, pp. 18–28, 2010.

[2] "Technology Roadmap Smart Grids," International Energy Agency (IEA), Tech. Rep., 2011. [Online]. Available: http://www.iea.org

[3] A. Woyte, V. Van Thong, R. Belmans, and J. Nijs, "Voltage fluctuations on distribution level introduced by photovoltaic systems," *Energy Conversion, IEEE Transactions on*, vol. 21, no. 1, pp. 202–209, 2006.

[4] J. Lopes, N. Hatziargyriou, J. Mutale, P. Djapic, and N. Jenkins, "Integrating distributed generation into electric power systems: A review of drivers, challenges and opportunities," *Electric Power Systems Research*, vol. 77, no. 9, pp. 1189–1203, 2007.

[5] "Distributed Energy Management (DER): Advanced Power System Management Functions and Information Exchanges for Inverter-based DER Devices, Modelled in IEC 61850-90-7," International Electrotechnical Commission (IEC), Tech. Rep., 2012. [Online]. Available: http://www.iec.ch

[6] V. Gungor, D. Sahin, T. Kocak, S. Ergut, C. Buccella, C. Cecati, and G. Hancke, "A survey on smart grid potential applications and communication requirements," *Industrial Informatics, IEEE Transactions on*, vol. 9, no. 1, pp. 28–42, Feb. 2013.

[7] "Standard language protocols for photovoltaics and storage grid integration," Electric Power Research Institute (EPRI), Tech. Rep., 2010. [Online]. Available: http://www.epri.com

[8] "Communication networks and systems for power utility automation - Part 7-420: Basic communication structure - Distributed energy resources logical nodes," International Electrotechnical Commission (IEC), Tech. Rep., 2009. [Online]. Available: http://www.iec.ch

[9] L. Zhu, D. Shi, and X. Duan, "Standard function blocks for flexible IED in IEC 61850-based substation automation," *IEEE Transactions on Power Delivery*, vol. 26, no. 2, pp. 1101–1110, 2011.

[10] SMB Smart Grid Strategic Group (SG3), "IEC Smart Grid standardization roadmap," International Electrotechnical Commission (IEC), Geneva, Switzerland, Tech. Rep. Ed. 1.0, 2010. [Online]. Available: http://www.iec.ch

Appendix B Workshop 2 Recordings

1. SCADA systems & Operator Support

Stage \ Card	**Green**: Step	**Blue:** Issue/target	**Pink:** Opportunity/challenge
1. Concept	Integration of SCADA Level functions with Low-level control;	How to make innovations in SCADA systems? How to evaluate SCADA concepts? Identify related Research challenges	• Platforms for SCADA concept development & evaluation; • Methods for alignment of SCADA /OS and control concepts: Functional Models • Existing DTU experience & local network • Automatic configuration • Collaboration with SCADA & operator support experts from other fields
2. Development	Testing of methods in open-loop & closed- loop setting	Identification of relevant & feasible setups	
3. Lab deployment	SCADA & support concept evaluation with test users	Configuration effort Relevant test users	
4. Field deployment	Deployment in actual operational ; or Testing with 'real' Operators	Translation from Open Source / research implementation to industrial SCADA platform?	

2. Development, testing and validation using real-time co-simulation

Stage \ Card	**Green**: Step	**Blue:** Issue/target	**Pink:** Opportunity/challenge
1. Concept	Requirements/KPI* & technical aspects Selecting appropriate platform	Requirements formulation, either [TSO -> Customer] vs. [Customer -> TSO]	Choose bottom-up or top-down approach What is test objective? E.g. electric network or communications, etc
2. Development	Interfaces Definition & implementation Safety limits defined & applied	Without clarified interfaces it can't work.	Definition of Application- and Simulation-Interfaces
3. Lab Deployment	Define tests & results criteria Interface testing Systems testing Component testing	RT-Simulations realistic & validated Experiment setup Staff training Validation KPI	Experienced (permanent) staff For controller deployment: automatic config. of lab comm. interfaces
4. Field deployment	Moving onward from RTDS to field	"readiness level" after previous stage? Test: operates within regulation limits;	Map out final Vendor & Utility requirements (KPI / test targets)

		proper fault behavior	

(*) KPI: Key Performance Indicator; i.e. a quantified target requirement.

3. Prototyping and Development using Co-simulation

Stage \ Card	**Green**: Step	**Blue:** Issue/target	**Pink:** Opportunity/challenge
1. Concept	Define/Identify: • appropriate tools • information Flows (diagram) • Interfaces • Scope limitation & approximations	Requirements quality. Time-saver or quality increment? Sim-tool versions incompatibility Integration of further innovations w.r.t. simulation tools.	Structured requirements (targets) formulation to facilitate mapping to simulations
2. Development	Incremental development Definition of testing scenarios	Setup and „glueing“ (interfaces/interactions) Scalability Reusability	Potential time-saver: keep code, but also overhead Requirements to facilitate development focus
3. Lab Deployment	(this is the target stage)	(consistency / transfer of interfaces btw. Co-sim & lab)	(interfaces for Lab+Co-simulation integration)
4. Field deploym.	-	-	-

4. Controller Design & Deployment using 'model-based design'

With reference to e.g. IEC 61499 (function blocks), Functional modelling (MFM), etc.

Stage \ Card	**Green**: Step	**Blue:** Issue/target	**Pink:** Opportunity/challenge
1. Concept	Model-based specification of requirements Abstract definition of control solution	(1) Time consuming formal specification (2) Control cost more time than monitoring	Potential for end-to-end platform (e.g. commercial solution)
2. Development	Development in Modeling environment	Save time based on model specification	Time saving by code generation‘
3. Lab Deployment	Standards-based implementation Facilitated configuration of interfaces	Lab may (not yet) support the “right” standard	Universities/ research to define a specification framework
4. Field deployment	Implementation on commercial solutions & platforms	Practitioners not believing in ‘theoretical’ / ‘unproven‘ methods	More reliable due to first principles; Efficient deployment framework Perceived risk from practitioners?

5. Iterative Prototyping and Field Deployment using Interface-oriented integration

(with reference to Simulation Message Bus – SMB)

Stage \ Card	**Green**: Step	**Blue:** Issue/target	**Pink:** Opportunity/challenge
1. Concept	Control Strategy Spec. Algorithm development Modularity spec. "Abstract": • Validation • Interface definition	Specification level, limited use of RT simulation	
2. Development	Implementation for target system: Separate testing of communications Data model	Data representation & connector semantics Co-simulation timing	Maybe compatible with model-based approaches "Accelerated Real-time"
3. Lab Deployment	Adapt/translate proprietary interfaces to unified (SMB) interface	Diverse lab interfaces Need system expert	Unified interface Workflow definition Best practice & design patterns Process Automation feasible
4. Field deployment	Interoperability w/ Field communications Scaling Mutual influence	Compatibility of SMB with field devices Scalability? Adaptation?	Field experts familiar with SMB Adaptors of SMB with relevant