Downloaded from orbit.dtu.dk on: Apr 25, 2024

DTU Library

FE based performance estimation of PMBLDC motor based drives

Fasil, Muhammed; Mijatovic, Nenad; Holbøll, Joachim; Jensen, Bogi Bech

Publication date:
2015

Document Version
Peer reviewed version

Link back to DTU Orbit

Citation (APA):
Fasil, M. (Author), Mijatovic, N. (Author), Holbøll, J. (Author), & Jensen, B. B. (Author). (2015). FE based performance estimation of PMBLDC motor based drives. Sound/Visual production (digital)

General rights
Copyright and moral rights for the publications made accessible in the public portal are retained by the authors and/or other copyright owners and it is a condition of accessing publications that users recognise and abide by the legal requirements associated with these rights.

- Users may download and print one copy of any publication from the public portal for the purpose of private study or research.
- You may not further distribute the material or use it for any profit-making activity or commercial gain
- You may freely distribute the URL identifying the publication in the public portal

If you believe that this document breaches copyright please contact us providing details, and we will remove access to the work immediately and investigate your claim.

FE based performance estimation of PMBLDC motor based drives

Muhammed Fasil[a], Nenad Mijatovic[a], Joachim Holbøll[a], and Bogi Bech Jensen[b]

[a]*Department of Electrical Engineering, Technical University of Denmark, Kgs. Lyngby, 2800, Denmark. Tel: (+45) 45 25 35 00;*

[b]*Department of Science and Technology, University of the Faroe Islands, Torshavn, FO-100, Faroe Islands. Tel: +298 292560*

Presented by

Muhammed Fasil

Ph.D. Student

DTU Electrical Engineering

Department of Electrical Engineering

Background

Permanent magnet drive topology		Simulation method		Simulation time
Controller	Radial flux motor	Circuit simulation software PSpice	2D-Finite element software 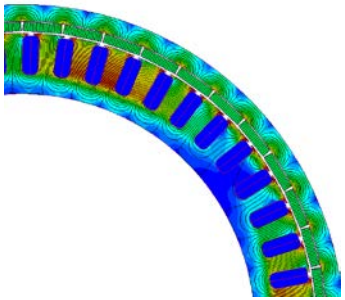	Hours
Controller	Axial flux motor 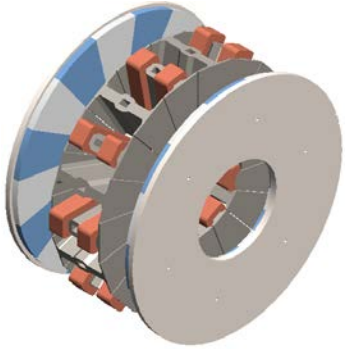	Circuit simulation software PSpice	3D-Finite element software 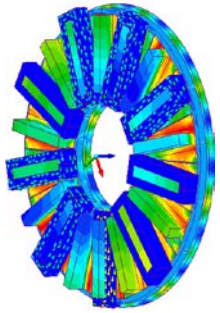	Days

Outline

- Axial flux permanent magnet brushless DC (PMBLDC) motor for an electric two-wheeler
- Proposed approach for the performance simulation of PMBLDC motor drives
- Electromagnetic finite element (FE) model of PMBLDC motor
- System modelling of PMBLDC motor drives in circuit simulation software
- Results of ISO 13064 drive cycle simulation of electric two-wheeler
- Conclusion

Axial flux motor for electric two-wheeler

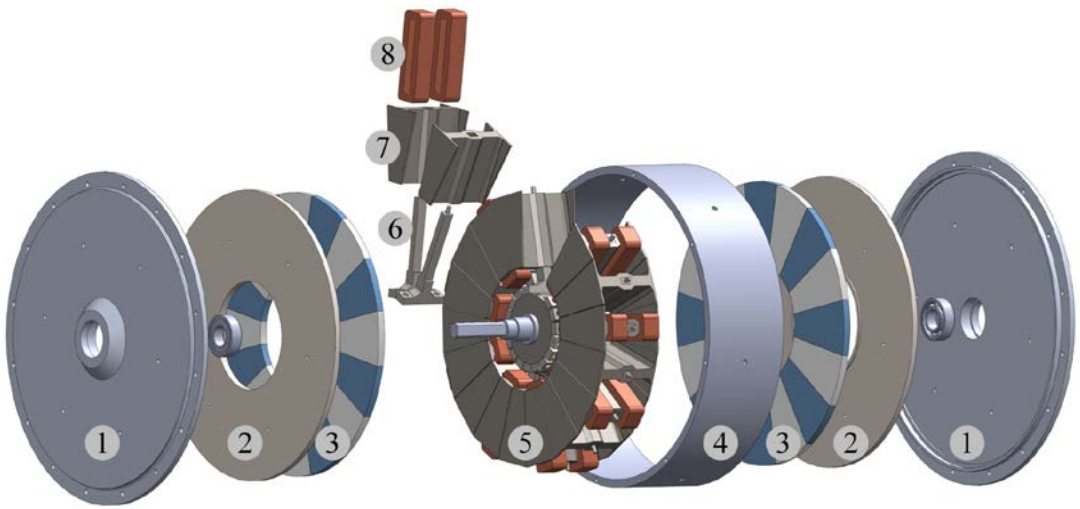

1. end cover, 2. rotor yoke, 3. magnet, 4. casing, 5. stator, 6. tooth holder, 7. stator tooth, and 8. coils

The specification and geometrical dimensions of ferrite magnet sat PMBLDC motor

Parameter	Value
The rated voltage	48 V
The rated power output	700 W
The rated torque	20 N m
Outer diameter of the motor	275 mm
Diameter ratio	0.45
Axial length of the motor	65.5 mm
Number of poles	16
Number of slots	18
Gross slot fill factor	0.5
Thickness of magnet poles	7.5 mm
Length of air gap	0.4 mm
Number of turns per coil	30
Diameter of a coil turn	2.68 mm

3D Flux path in axial flux machine

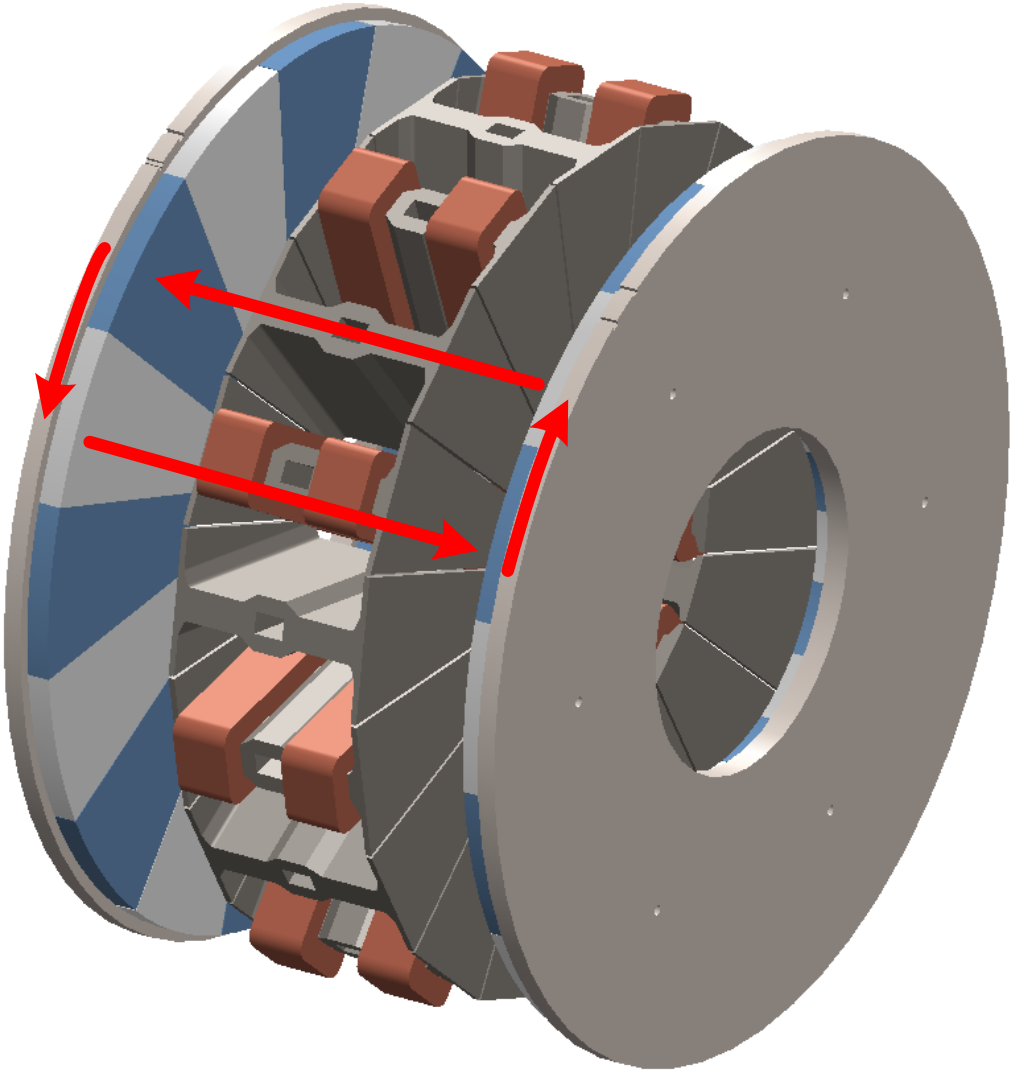

Proposed approach for the performance simulation of PMBLDC motor drives

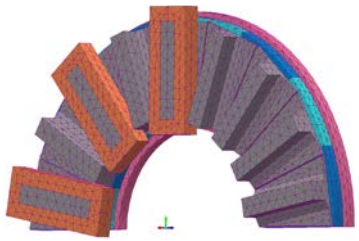

3D static FE model

Flux linkage vs. rotor position

Inductance

Cogging torque vs. rotor position

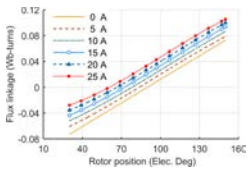

3D data table

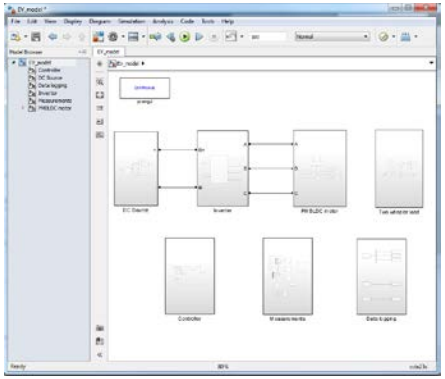

Circuit simulation softwares

Results from FE software

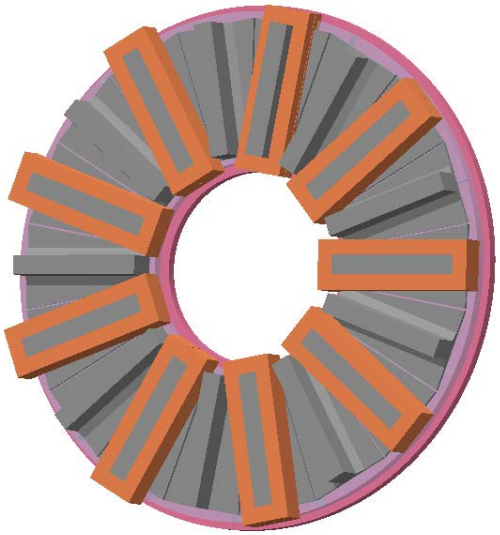

FE model utilizing geometrical symmetry

Meshed FE model

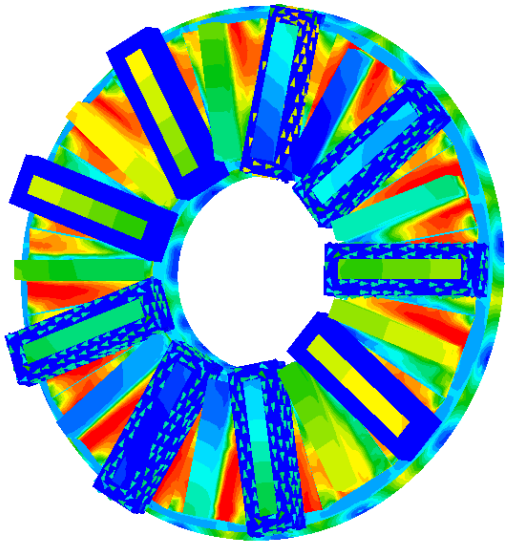

Static field solutions

Results from FE software

Flux linkage vs. rotor position for different phase current

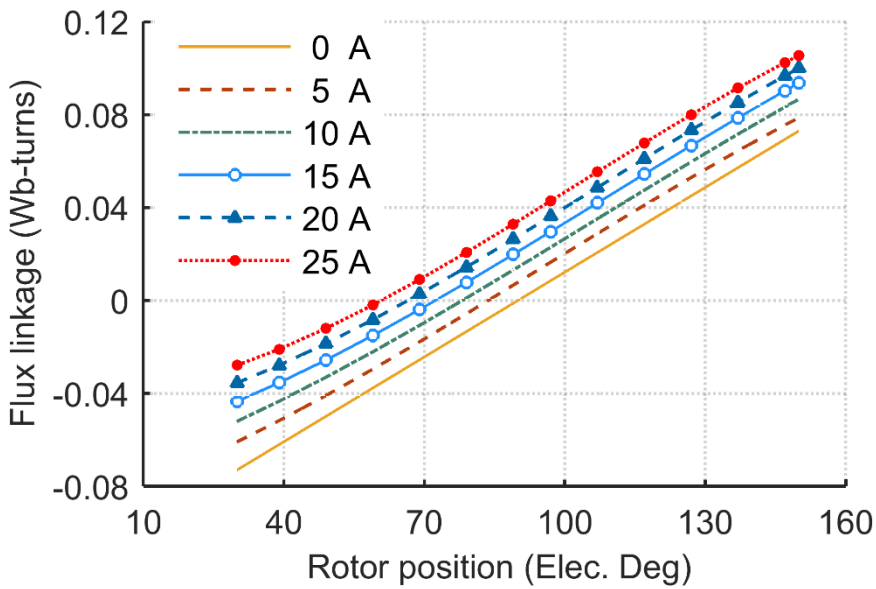

Phase inductance for different phase current

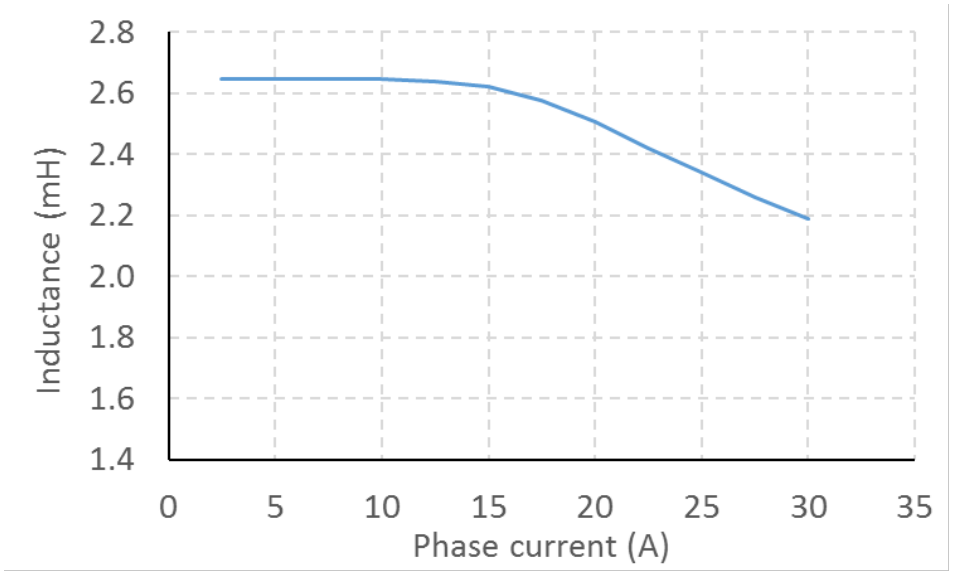

Mathematical model of PMBLDC motor drive in circuit simulation software

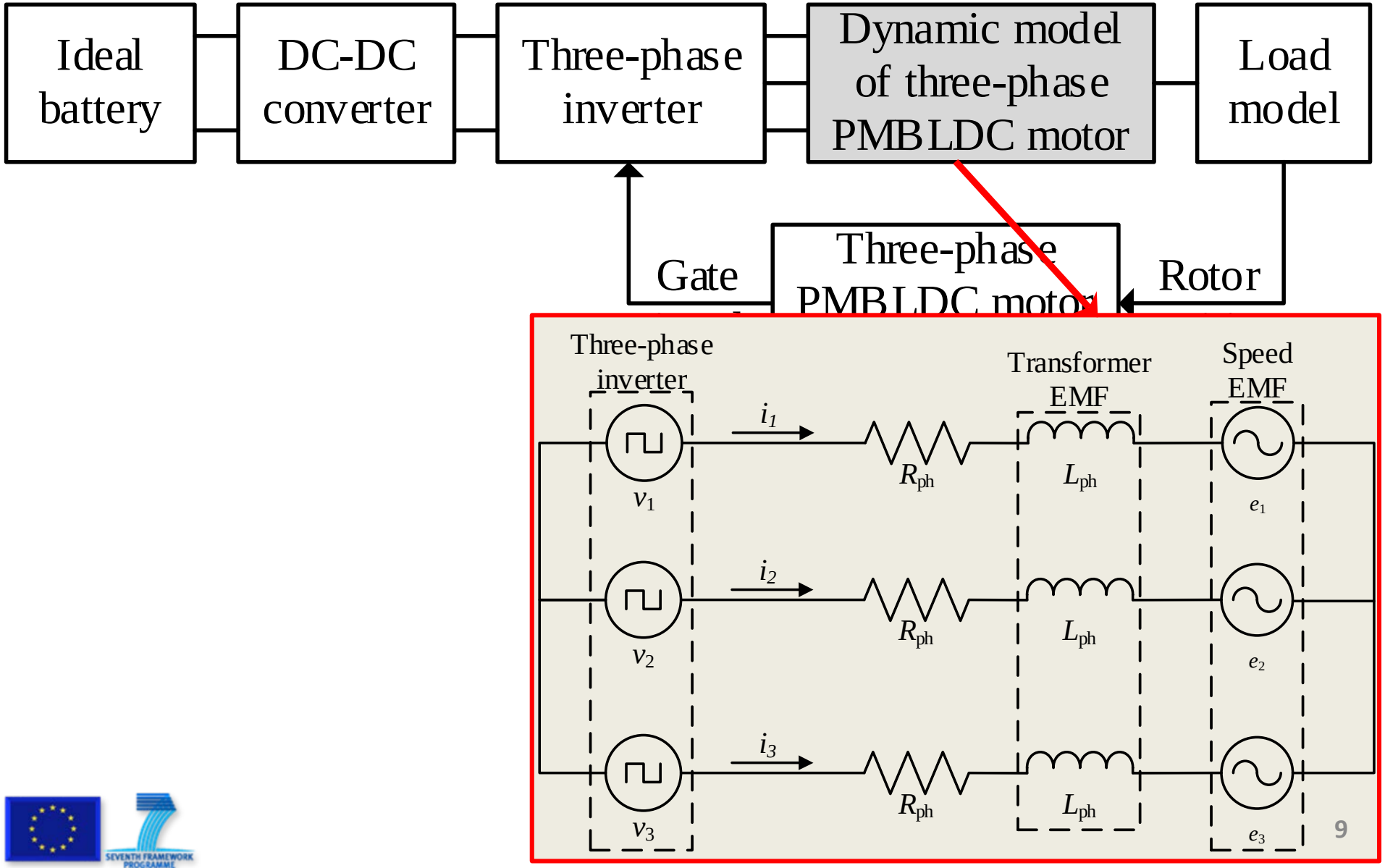

System model of electric two-wheeler in circuit simulation software

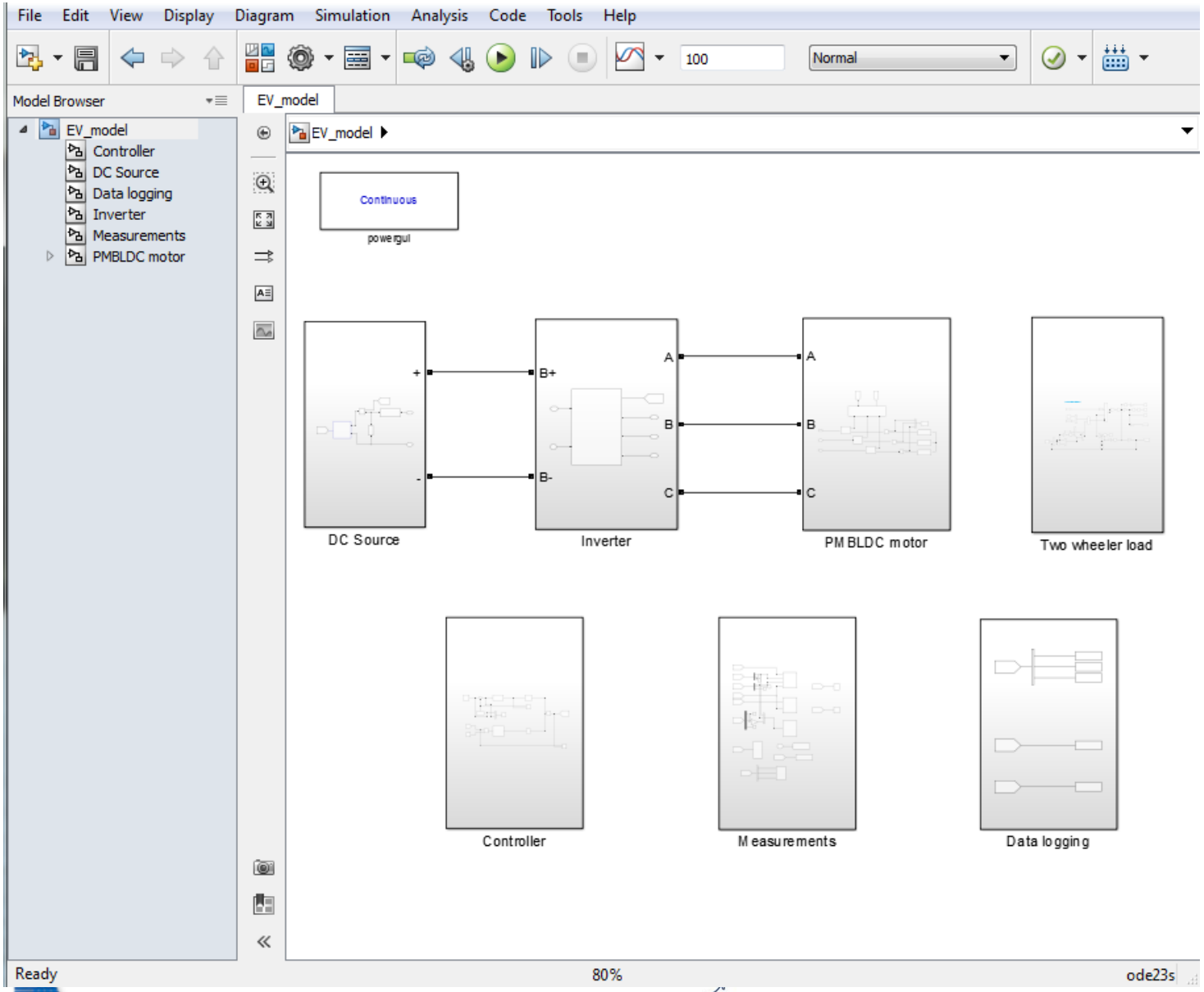

Results of ISO 13064 drive cycle simulation

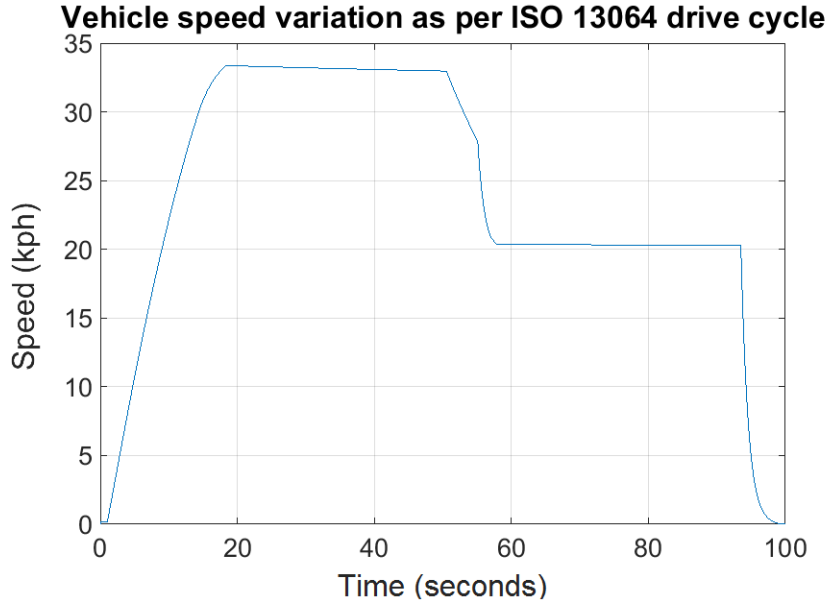

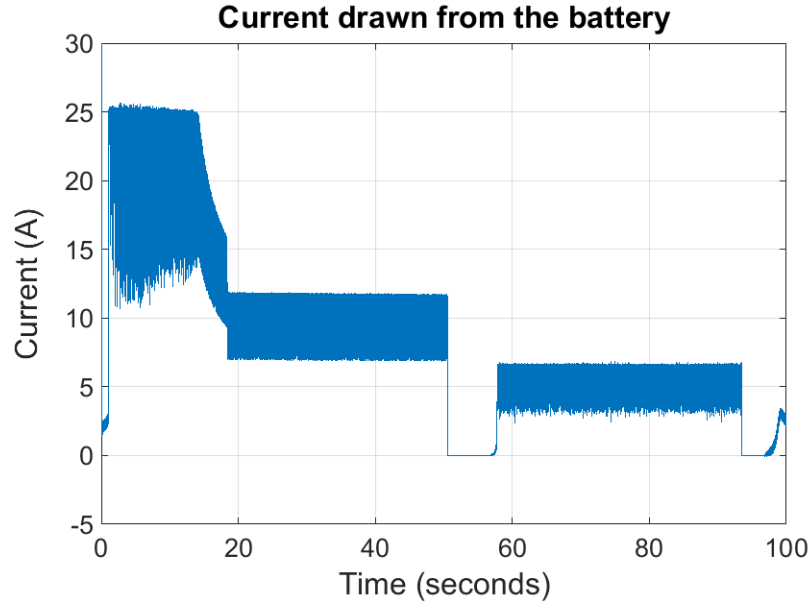

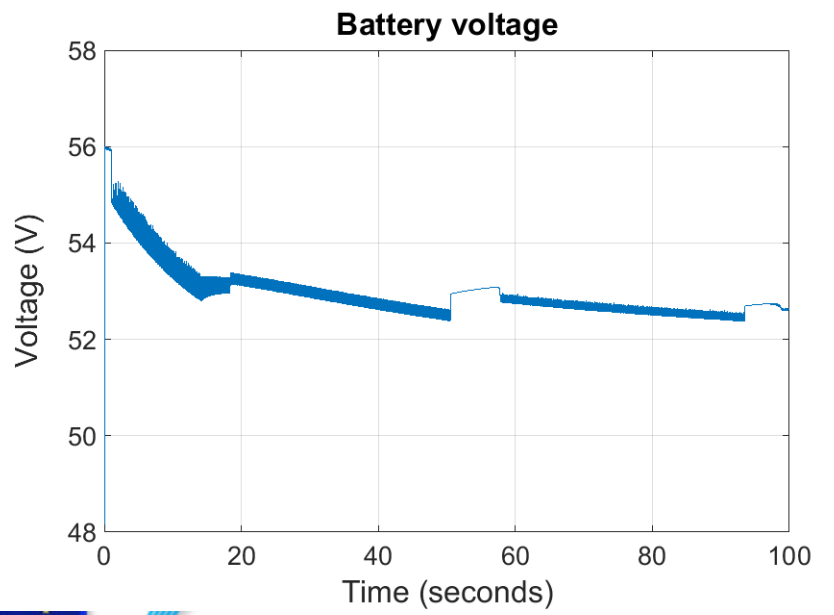

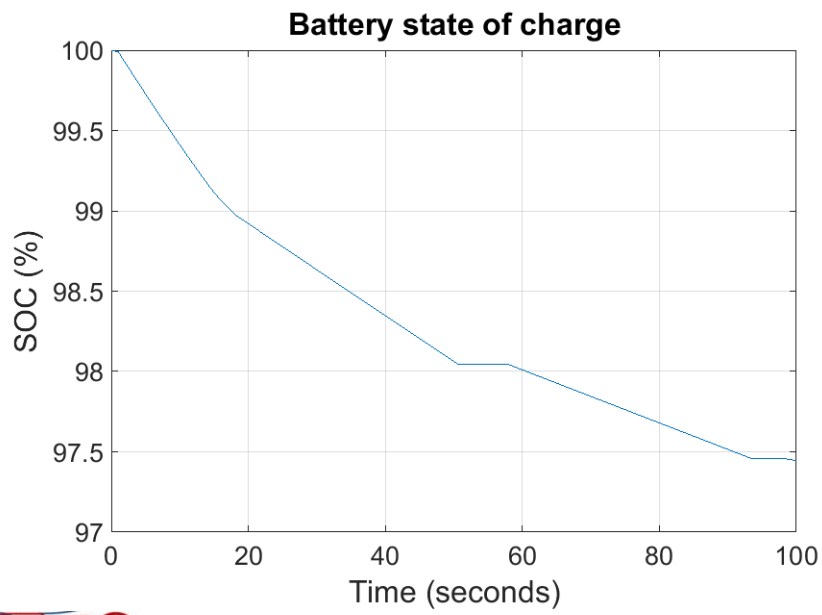

Conclusion

- An accurate dynamic model of PMBLDC motor is developed based on the results from the electromagnetic finite element simulation
- Dynamic model helps to carry out accurate system studies of 3D machine topologies
- The proposed model is used to simulate the system performance of an electric two-wheeler when driven as per ISO 13064 drive cycle
- Experimental validation of the model will be done in coming months

Contact

Nenad Mijatovic
Postdoc
DTU Electrical Engineering
Phone +45 45 25 35 07
nm@elektro.dtu.dk

Muhammed Fasil
PhD student
DTU Electrical Engineering
Phone +45-45-25-36-51
mfasil@elektro.dtu.dk

Consortium

The research is partly funded by the European Community's Seventh Framework Programme under grant agreement no. 310516

www.nanopyme-project.eu