Methods and Strategies for Overvoltage Prevention in Low Voltage Distribution Systems with PV

Hashemi Toghroljerdi, Seyedmostafa; Østergaard, Jacob

Published in:
I E T Renewable Power Generation

Link to article, DOI:
10.1049/iet-rpg.2016.0277

Publication date:
2016

Document Version
Peer reviewed version

Methods and Strategies for Overvoltage Prevention in Low Voltage Distribution Systems with PV

Seyedmostafa Hashemi [1*], Jacob Østergaard [2]

[1&2] Center for Electric Power and Energy (CEE), Technical University of Denmark (DTU), Kgs. Lyngby, Denmark.
[*]shtog@elektro.dtu.dk

Abstract: The rapid development of photovoltaic (PV) systems in electrical grids brings new challenges in the control and operation of power systems. A considerable share of already installed PV units are small-scale units, usually connected to low voltage (LV) distribution systems that were not designed to handle a high share of PV power. This paper provides an in-depth review of methods and strategies proposed to prevent overvoltage in LV grids with PV, and discusses the effectiveness, advantages, and disadvantages of them in detail. Based on the mathematical framework presented in the paper, the overvoltage caused by high PV penetration is described, solutions to facilitate higher PV penetration are classified, and their effectiveness, advantages, and disadvantages are illustrated. The investigated solutions include the grid reinforcement, electrical energy storage application, reactive power absorption by PV inverters, application of active medium voltage to low voltage (MV/LV) transformers, active power curtailment, and demand response (DR). Coordination between voltage control units by localized, distributed, and centralized voltage control methods is compared using the voltage sensitivity analysis. Based on the analysis, a combination of overvoltage prevention methods and coordination between voltage control units can provide an efficient and reliable solution to increase the PV hosting capacity of LV grids.

1. Introduction

The adoption of Photovoltaic (PV) in electrical energy systems is increasing and current trends suggest that the installation of PV will increase during the coming years. At the end of 2000, the cumulative capacity of the PV units installed worldwide was around 1 GW, and by the end of 2010, this capacity had increased to around 40 GW. In 2011 and 2012, more than 30 GW of PV units were installed annually, and the cumulative PV capacity reached 100 GW at the end of 2012. More than 38 GW of PV units were installed annually in 2013 and 2014, and this capacity was more than 50 GW in 2015. By the end of 2015 the worldwide cumulative capacity had reached 229.3 GW. The global annual installations and the global PV cumulative installed capacity from 2001 to 2015, as well as the minimum and the maximum values forecasted for PV installation from 2016 to 2020 are shown in Fig.1 [1–5].

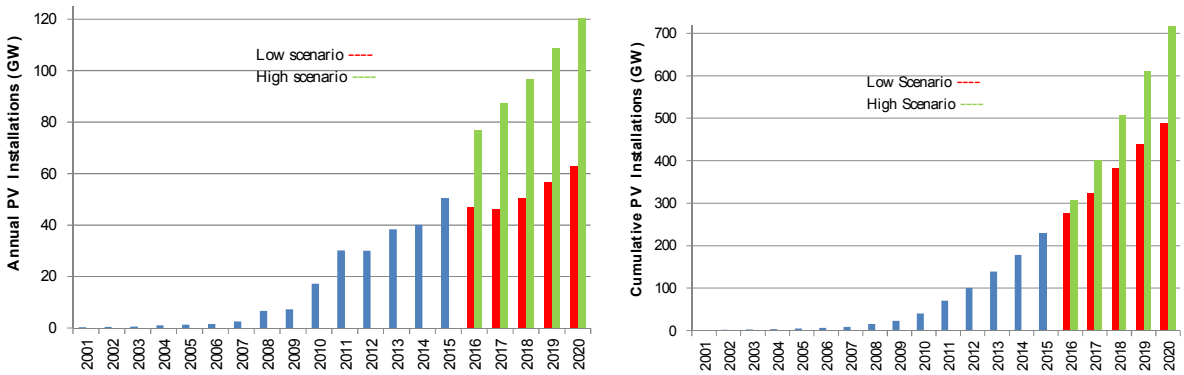

(a) *(b)*

Fig. 1. *The global PV installations from 2001 to 2015, and the minimum and the maximum values forecasted for PV installation from 2016 to 2020, according to [1–5].*
a Annual
b Cumulative

PV systems can also be split into distributed systems and centralized systems. Distributed systems are usually installed to provide power to nearby customers whether or not their owners, while centralized PV systems act similarly to the power stations and are usually connected to higher voltage than the voltage level of LV grids [2, 3]. The majority of already installed PVs are small-scale units, which are usually connected to LV distribution systems [3–5] and have a capacity of less than 10 kW [2]. According to the European Photovoltaic Industry Association (EPIA), rooftop PV systems were the most prevalent in 2012, with around 12 GW in net power generation capacities added into the 27 European countries' electricity grid, while utility-scale PV systems, generating around 4.7 GW, took fourth place after onshore wind and gas power plants [3]. In 2012, in countries such as the Netherlands, Belgium, the United Kingdom, and the Czech Republic more than 50 percent of new PV installations were residential PVs. This percentage for Denmark was around 100% in 2012 where around 378 MW residential PVs were installed [4]. Around 20 GW rooftop PV units were installed annually in 2013, 2014, and 2015. Although the PV market is a policy-driven market, the trends suggest that decentralized PV installation will increase during the coming years. The annual historical rooftop and utility-scale PV installations from 2012 to 2015, as well as the minimum and the maximum forecast values for future PV installations from 2016 to 2020, are shown in Fig. 2 [3–5].

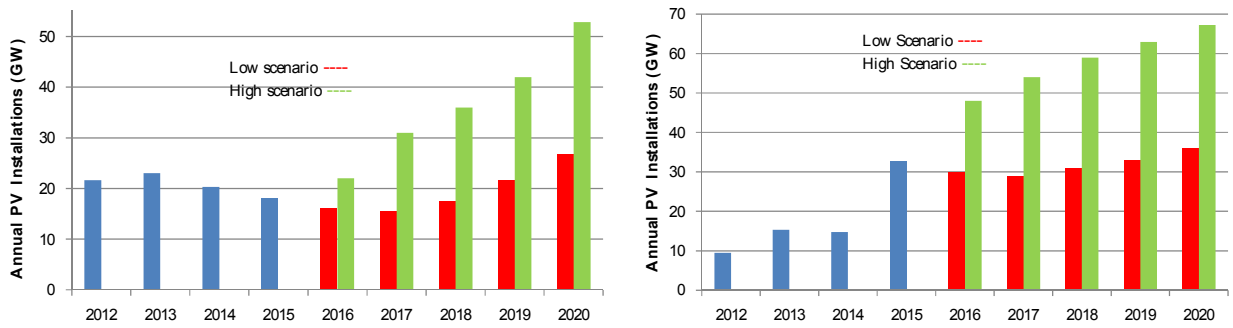

(a) *(b)*

Fig. 2. *The global annual historical rooftop and utility-scale PV installations, and the minimum and the maximum forecast values for future PV installations, according to [3–5].*
a Rooftop PV installations
b Utility-scale PV installations

Despite the economic and environmental advantages associated with these PVs, their potential impact on LV grids has yet to be thoroughly investigated, particularly as the locations of these units cannot be controlled by distribution system operators (DSOs) and their output power is stochastic and non-dispatchable. In addition, PV installation is usually non-uniform across distribution systems [6]. Low residential PV penetration can be considered as an ancillary service to improve the grid voltage quality and to decrease the power loss. However, a higher PV penetration may cause difficulties in the control and operation of LV grids. Among the challenges associated with high PV penetration are: overloading of the grid components, such as LV transformers and cables [7, 8]; active and reactive power flow fluctuations [9–13]; the network protection malfunction [14]; and voltage unbalance [15–19]. However, overvoltage is the main challenge in many LV grids with PV, and is one of the main limiting factors in increasing PV penetration in LV grids. Overvoltage caused by PV systems happens when the power flow path is reversed from customers to the LV transformers. In residential feeders, in which the load consumption is relatively small during high PV generation periods, the potential for overvoltage is greater, and a lower share of PV systems may cause reverse power flow and an unacceptable voltage rise in the grid. Although various methods including the application of active MV/LV transformers [20–26], active power curtailment [27–32], reactive power absorption by PV inverters [20, 33–46], Demand Response (DR) [47–51], and the application of electrical energy storage systems (EESSs) [16, 50, 52–71] are proposed to overcome this challenge in recent years, there is a lack of research paper providing a detailed review of the methods and solutions proposed to facilitate higher PV penetration in LV grids, considering a comprehensive analysis of advantages and disadvantages of them.

The objective of this paper is to provide a detailed and in-depth review of methods proposed to prevent overvoltage in LV grids with PV, and to discuss the effectiveness, advantages, and disadvantages of these methods. To evaluate the voltage rise in LV grids with PV, a simple two-bus system is modeled in section II and the voltage rise caused by PV and the potential solutions for overvoltage prevention are discussed using a mathematical framework. In section III, the proposed overvoltage prevention methods, namely, reinforcement of the current grids, application of active MV/LV transformers, active power curtailment, reactive power absorption by PV inverters, DR, application of EESSs, and EV application are discussed. Selecting the most effective voltage control methods are also discussed in this section. In section IV, using the voltage sensitivity analysis, the effects of local PV generation on an entire LV grid are studied, and the advantages and disadvantages of using localized, distributed and centralized coordinated control methods are examined using a simplified three-bus system. Finally the conclusion is provided in section V.

2. Voltage rise caused by PV systems and potential solutions

To have a better understanding of different methods for overvoltage prevention in LV grids, a simplified two-bus system is presented and the methods for mitigating the overvoltage are discussed here. Consider a PV system connected to an LV grid as shown in Fig. 3. $\underline{Z}_{th}$ and $\underline{U}_{th}$ are the thevenin impedance and the thevenin voltage, respectively, $\underline{I}_{PV}$ is the PV feed-in current, $\underline{U}_{PCC}$ is the voltage at the PV point of connection, and $\underline{I}_L$ is the load consumption. The net feed-in current can be calculated by:

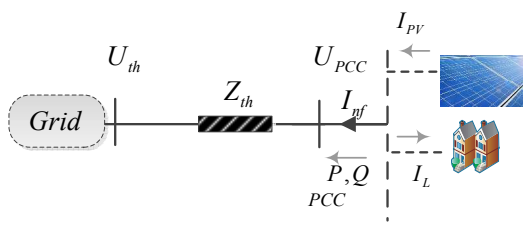

Fig. 3. *Thevenin equivalent of a typical PV system connected to an LV grid*

$$\underline{I}_{nf} = \underline{I}_{PV} - \underline{I}_L = \left(\frac{\underline{S}_{nf}}{\underline{U}_{PCC}}\right)^* \tag{1}$$

where $\underline{S}_{nf}$ is the net apparent power injected into the grid. By neglecting the power loss across the thevenin impedance, the $\underline{I}_{nf}$ can be rewritten as:

$$\underline{I}_{nf} = \left(\frac{P - jQ}{U_{th}}\right) \tag{2}$$

The voltage at PCC can be calculated as:

$$\underline{U}_{PCC} = U_{th} + \underline{Z}_{th} \times \underline{I}_{nf} \tag{3}$$

Suppose that $\underline{Z}_{th} = R_{th} + jX_{th}$. Thus:

$$\underline{U}_{PCC} = \left(U_{th} + \frac{P \times R_{th} + Q \times X_{th}}{U_{th}} + j\frac{P \times X_{th} - Q \times R_{th}}{U_{th}} \right) = U_{\mathrm{Re}} + jU_{\mathrm{Im}} \tag{4}$$

where U_{Re} and U_{Im} are the real and imaginary parts of the $\underline{U}_{PCC}$, respectively. The magnitude of $\underline{U}_{PCC}$ can be calculated as in the following:

$$U_{PCC} = \sqrt{U_{\mathrm{Re}}^2 + U_{\mathrm{Im}}^2} \tag{5}$$

For most connection points in distribution systems, the $U_{\mathrm{Re}}^2 >> U_{\mathrm{Im}}^2$ [20]; therefore, the approximate voltage magnitude at PCC can be simplified as follows:

$$U_{PCC} \approx U_{th} + \frac{P \times R_{th} + Q \times X_{th}}{U_{th}} \tag{6}$$

The voltage increase at PCC can be calculated as:

$$(\Delta U \times U_{th}) \approx (P \times R_{th} + Q \times X_{th}) \tag{7}$$

According to the standards applied to LV grids, the voltage at the connection point has to be limited to a specific amount. Suppose that the maximum voltage increase is limited to $\Delta U_{\max}$; therefore, the maximum active power that can be injected into the grid without overvoltage is as follows:

$$P_{\max} = \left(\frac{\Delta U_{\max} \times U_{th} - Q \times X_{th}}{R_{th}} \right) \tag{8}$$

If the active power increases to more than $P_{\max}$ defined in (8), the PCC voltage exceeds the allowed boundary. According to (8), three main factors determine the $P_{\max}$: $\Delta U_{\max} \times U_{th}$, $Q \times X_{th}$ and R_{th}. To decrease the R_{th}, the lines have to be replaced by stronger lines or new lines have to be constructed to reinforce the grid. The reactive power absorption by PV inverters can also increase the $P_{\max}$. In addition to these methods, if the power generated by PV inverter is consumed locally and is not injected to the grid, the permissible PV installation can increase.

As analysed later in this paper, the majority of the proposed methods for overvoltage prevention focus on decreasing the voltage rise along LV feeders. According to (6), the PCC voltage also depends on the voltage on the LV side of MV/LV transformer. In many LV distribution grids, the voltage variations on the MV side cannot be mitigated, as the tap positions of MV/LV transformers are fixed. Considering these voltage variations in MV distribution systems, $\Delta U_{\max}$ is usually limited to less than 5% to ensure acceptable voltage at the PCC. To illustrate further, a typical design consideration for distribution systems in Germany is depicted in Fig. 4 [26, 72]. As can be seen, to have an acceptable voltage quality at the

customer points of connection, the maximum voltage increase in LV grids is limited to 3%, which can potentially limit the maximum PV installation in the grid. Using active MV/LV transformers, a higher voltage increase along the feeder is acceptable. Therefore, the ΔU_{max} can be increased considerably, which results in more possible PV installations.

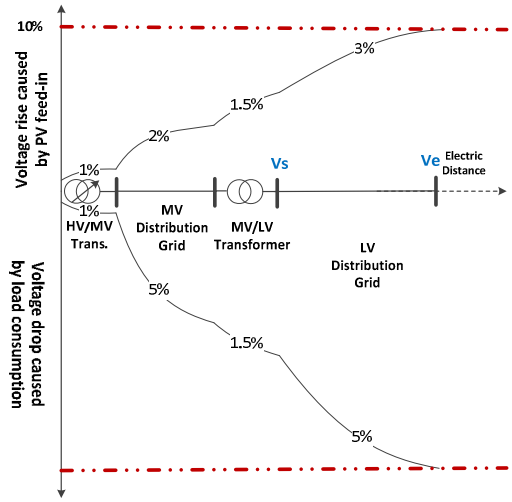

Fig. 4. *A typical design consideration for distribution systems.*

3. Overvoltage prevention methods applied to LV grids

As discussed before, according to the standards applied to LV grids the maximum voltage at the connection point has to be limited to a specific amount. Limiting the PV installation in LV grids is one of the methods that may be used by DSOs to prevent overvoltage in the grid. In this approach, using the grid data such as impedances of lines, grid configuration and number of customers, the maximum possible PV installation in the grid without overvoltage occurrence is estimated. It is also possible to determine a maximum PV installation per customer. In [50], a method is proposed based on the voltage sensitivity analysis to determine the maximum active power that each customer can inject into the grid without overvoltage occurrence. The Monte Carlo analysis can be used to consider the probabilistic nature of PV location and size in maximum PV penetration determination [73]. Although simplified methods can be used to estimate the maximum voltage across LV feeders, the grid data is still required [74].

One of the main problems associated with limiting the PV installation is that the maximum possible PV installation differs considerably for each grid and extending the calculated values of one grid or the average of some LV grids to all grids is not a reliable solution. Therefore, each grid has to be studied individually and the relevant data, such as the grid structure and types of conductors, have to be

established. In many LV grids, these data are not readily accessible. In addition, even in an individual grid and according to the location of PV systems, different maximum PV penetrations may be achieved [75].

Limiting the PV installation in the grid is not an optimal solution because PV generation is variable during the day and the maximum daily PV generation is not fixed during the year. The measured maximum PV generation for a PV panel located at the Technical University of Denmark is shown in Fig. 5. As can be seen, the nominal peak generation of a PV unit only happens during a limited number of days during the year. Therefore, considering this maximum value and determining the PV penetration based on it may considerably limit the possible PV installation in the grid. As a result, overvoltage prevention methods need to be applied to LV grids to increase the PV hosting capacity.

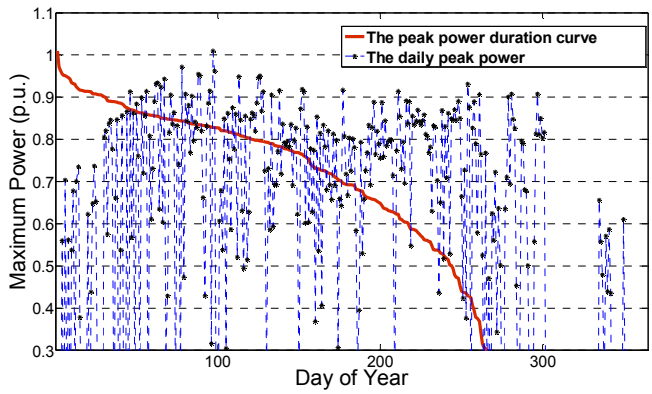

Fig. 5. *The daily peak power and the peak power duration curves.*

Different methods are proposed to increase the permissible active power feed-in in the grid, and they are classified in Fig. 6. Some of these methods are provided by customers, and some of them need to be applied by DSOs. These methods are explained in the following.

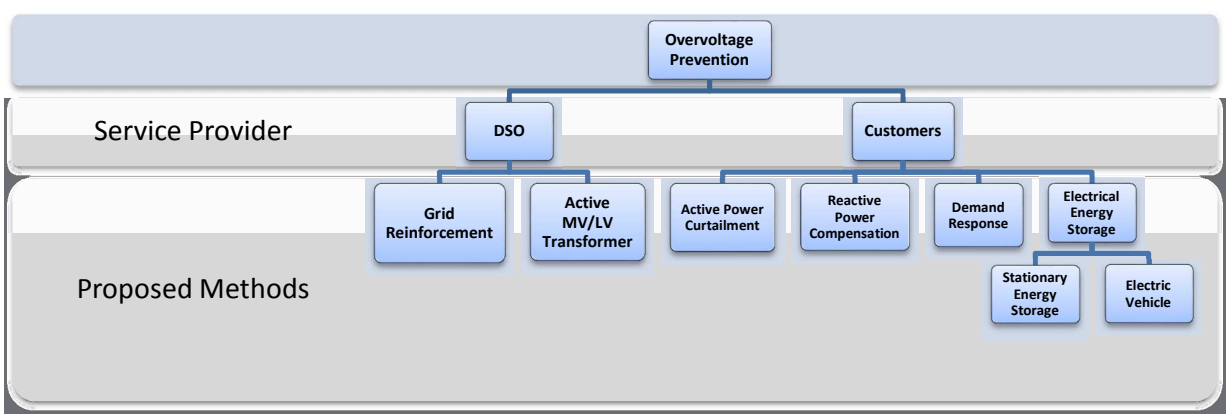

Fig. 6. *Classification of the proposed overvoltage prevention methods that can be applied to LV grids.*

3.1 Grid reinforcement

Grid reinforcement is the conventional solution to overcome the challenges associated with increasing the residential load consumption. This increase may cause an unacceptable voltage drop across the distribution feeder during high load consumption periods. Grid reinforcement is suggested as a solution to improve the voltage profiles of customers in the condition of high electric vehicle (EV) penetration. In a similar way, grid reinforcement seems one of the most effective methods for solving the overvoltage issue in high PV generation conditions [76]. Based on (8), decreasing resistances of the lines in an LV grid, either by replacing the previous lines with new lines with higher cross section or adding new lines in parallel with the previous lines, can effectively decrease the voltage rise in the PV points of connections. Although decreasing the feeder impedance by replacing the MV/LV transformers is also possible, this is not as efficient as reinforcement of the lines. In some radial LV grids, changing the structure to ring grids can improve the PV hosting capacity of those grids. However, the effects on the protection system and power flow directions should be thoroughly investigated. A comparison between the PV integration in a weak grid and the reinforced grid is shown in Fig. 7, according to the real measurements. As can be seen, in the reinforced grid the voltage fluctuation caused by PV system is small, while active power generated by PV is curtailed in the weak grid during high PV generation period.

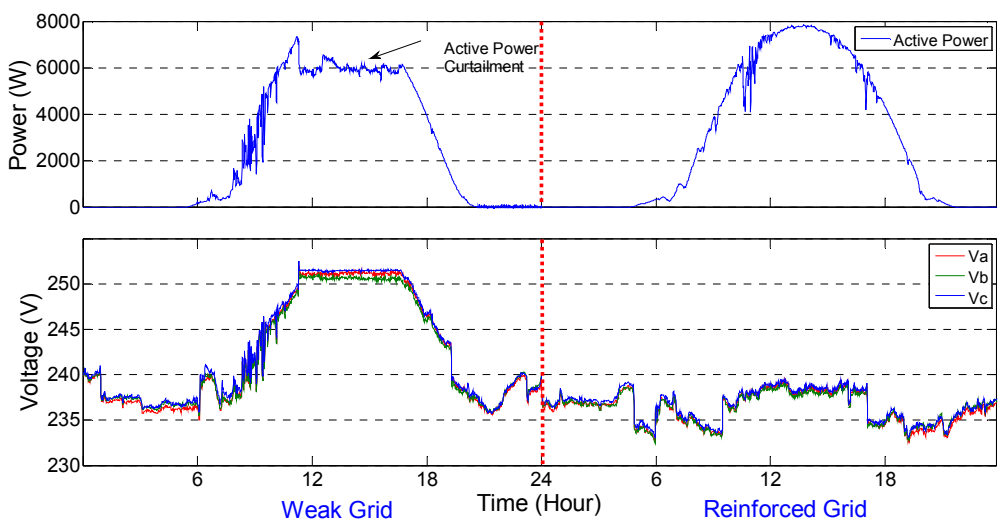

Fig. 7. *A comparison between the PV integration in a weak grid and the reinforced grid.*

The main drawback of grid reinforcement is the high cost associated with this method. This cost differs according to the grid structure, short circuit capacity of the grid, length of feeders, and types of

conductors used in the grid. Therefore, the associated cost is difficult to estimate in a whole grid. In addition, although the overvoltage occurs more often with increasing PV penetration, in many cases the overvoltage happens during only a few hours of the day. As the capacity factor of PV panels, which is the ratio of yearly energy generated by PV to its theoretical output if operated at its kWp power over a year [50] is small, grid reinforcement cannot be considered as a cost-efficient solution to mitigate the overvoltage caused by PV systems. To clarify, the yearly power duration curve (YPDC) of a PV panel located at the Technical University of Denmark is shown in Fig. 5. The YPDC is extracted by arranging the 10-minute average PV output power in descending order during a year. As can be seen, the PV generates power higher than 50% in less than 10% of a year.

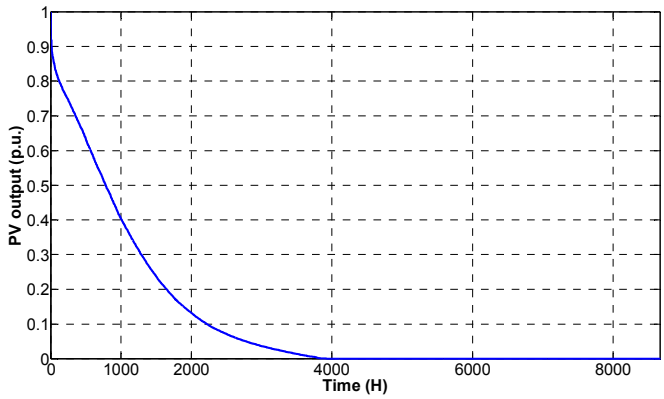

Fig. 8. *The yearly power duration curve of a PV system based on real data.*

3.2 The application of active transformers

Application of active transformers is another effective solution that seems more attractive than conductors' reinforcement in some grids. These active transformers can be transformers with on-load tap-changers (OLTCs) or solid-state and full power-electronic-based transformers. Technically it has a high potential for increasing the PV hosting capacity of LV grids [23], although the utilization of active MV/LV transformers in LV grids with high PV penetration is still rare. However, the number of these transformers tends to increase to facilitate the high PV integration in LV grids [24]. By using active MV/LV transformers, the voltages of MV and LV grids are decoupled; therefore, the voltage variations are limited to the tap-changer deadband.

Although the application of active transformer is an effective solution for overvoltage prevention, the efficient control of OLTC during high PV generation periods is essential for both increasing the lifespan of the tap-changer and efficient voltage control in the grid. The methods proposed for OLTC control for overvoltage prevention in high PV penetration conditions are mainly based on getting feedback

from all or selected buses in the grid using communication infrastructures [20–22]. These communication-based methods require initial investment and operational costs for the information and communication technology (ICT) infrastructures, which can increase the overall cost considerably and decrease the economic efficiency of applying transformers with OLTC [20]. Applying the autonomous fixed voltage set point method eliminates the ICT infrastructures [77]. However, it may decrease the technical advantages of applying these transformers. The time-based control of active transformers that are controlled by the fixed set point method may increase the efficiency without the need of grid monitoring [25]. Coordination of OLTC controllers with other voltage control units in distribution systems is necessary [26]. For instance, to decrease both the stress on the tap-changer and the power losses along the distribution system, coordination of energy storage units, step voltage regulators and OLTC is recommended [21]. It should be noted that application of mechanical tap-changers may increase the failure rate in LV grids, and using power electronic based tap-changer transformers is an alternative [78].

Regardless of the cost associated with the application of active transformers, the control of OLTC in transformers that supply more than one feeder has to be considered. This is especially important if the PVs are not uniformly distributed in different feeders of an LV grid, and if the feeders host different PV penetrations. For instance, consider an LV transformer that supplies two feeders. One feeder supplies some commercial loads, which usually have the maximum consumption around noon, and the other supplies residential customers with many installed rooftop PVs, as shown in Fig. 9. In this condition, if the OLTC is set for overvoltage prevention in the residential feeder and V_1 is decreased, the customers located at the end of the commercial feeder may face an unacceptable voltage drop. Getting feedback from all or some customers in the grid can partly solve this challenge. To avoid the corresponding investment, the voltages at the end points of LV feeders can be estimated using voltage estimation methods [79].

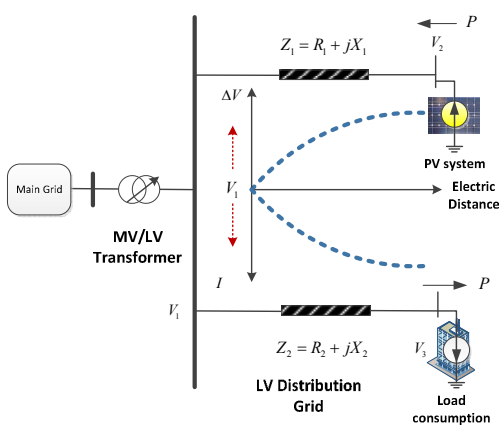

Fig. 9. *A MV/LV transformer supplying two feeders.*

3.3 Active power curtailment

As previously discussed, limiting the maximum PV installation in the grid is not an efficient solution and the active power curtailment by PV inverters is suggested to deal with overvoltage in LV grids. As the public see PV power as green and free energy, output curtailment is likely to be an unacceptable solution. However, it is probably an unavoidable and economic solution for grid integration of PV systems. Without accepting a level of curtailment, reaching a high share of fluctuating renewable generation is quite expensive [51]. By controlling the maximum power point tracker (MPPT) of the PV inverter, the output power can be curtailed at specific level. A reliable curtailment solution can also be provided by the application of microinverters with modified overvoltage protection schemes [80].

Curtailment strategies have considerable effect on the energy curtailed [27, 28]. These strategies can be divided into two main categories: static, and dynamic methods. In the static methods, the output power of PV inverters is curtailed at a specific level. For example, in Germany the residential PVs are required to curtail the output power of the PV inverter at 70% of nominal PV panel capacity [20]. It is worth mentioning that the percentage of the power lost by power curtailment is not equal to the level of curtailment [29]. This is because the PV output is not fixed during the day. In addition, the numbers of days with high PV generation is usually limited. To emphasize, the output powers of a PV panel on two different days are shown in Fig. 10. The PV duration curves (PVDCs), which are extracted from PV output by arranging the output in descending order, are also shown for these days. By curtailment of the power at 60 %, the energy loss is less than 5 % in day A and 0% in the day B.

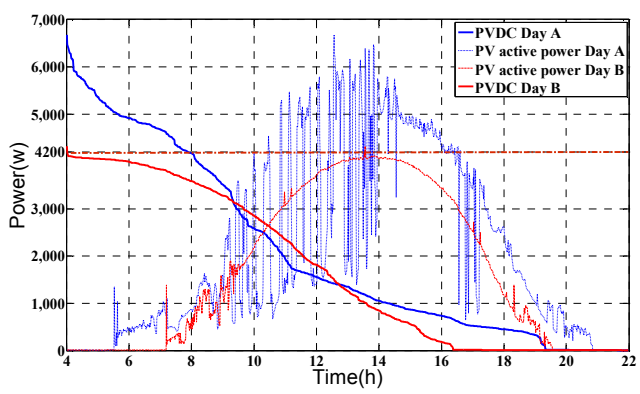

Fig. 10. *The daily peak power and the peak power duration curves.*

Compared to the static active power curtailment methods, dynamic methods have higher efficiency and less active power loss [30–32]. These dynamic curtailment methods can be applied using fixed or voltage dependent droop-based methods as well as a centralized controller. Voltage dependent curtailment

can significantly decrease the annual PV feed-in losses [81]; however, when the voltage dependent methods are applied, the benefits to customers located at the electrically weak nodes may be decreased. Therefore, some mechanisms are required to share the costs among PV owners in the case of applying the voltage dependent curtailment methods.

3.4 Reactive power management by PV inverters

In higher voltage power systems in which the R/X ratio is relatively small, reactive power control is the main tool for the voltage control of the system. As the R/X ratio is usually higher in LV grids, reactive power control is not as effective as higher voltage grids; however, it is still an efficient solution. The effectiveness of reactive power compensation by PV inverter depends on the overall R/X ratios of the grid. The LV grid cables with smaller cross sections usually have higher R/X ratios; however, to evaluate the effectiveness of reactive power absorption for voltage control the thevenin impedances at the PV PCCs have to be considered which include the impedance of the transformer with a high X/R ratio. Both localized and centralized control methods are proposed for the reactive power control of the PV inverter.

The localized methods are usually applied to the inverter controllers using the droop control method. Two main droop control methods for reactive power management of PV inverters are the power factor as a function of injected active power (*PF(P)*), and the reactive power as a function of voltage in the PV connection point (*Q(U)*) [20, 33–36]. In the *Q(U)* method, the voltage at the PV connection point is considered as a reference for the droop control and the PV inverter absorbs the reactive power only when the terminal voltage is higher than a specific value. The main drawback of this method is that in high PV penetration conditions, the inverters located near the LV transformer do not participate in reactive power management effectively [33]. In the *PF(P)* method, the reactive power is a function of the generated active power and the droop characteristics can be set so that during low PV generation hours, no reactive power is absorbed by the PV inverter. The schematics of these methods are shown in Fig. 11. In general, the effectiveness of the reactive power absorption method greatly depends on the grid structure and the R/X ratio of the grid, rather the method applied for the reactive power control. According to [37], the reactive power absorption can compensate the voltage increase caused by PVs by up to 25% and 60% for feeders with cables and overhead lines, respectively. For many typical MV/LV transformers, by applying the *PF(P)* method and considering the power factor of 0.9 at the terminal of transformers, the voltage can usually be decreased by more than 1%. Although the allowed voltage increase at the LV grid depends on the grid

design concept, it is usually less than 5%; therefore, the PV hosting capacity can be increased by more than 20% by applying reactive power absorption.

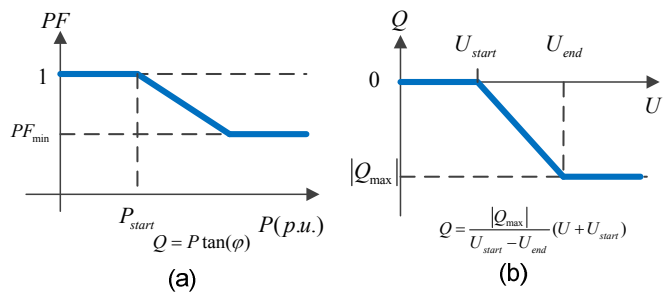

Fig. 11. *The schematics of local reactive power absorption methods; a) PF(P), b) Q(U).*

The reactive power absorption by the PV inverter increases the power loss and congestion of distribution lines. To decrease the reactive power loss caused by reactive power absorption, the parameters of the droops should be set according to the PV penetration, or certain PV inverters should be selected for the reactive power absorption [29]. It is also suggested to select some PV inverters at the beginning of each LV feeder to provide reactive power consumed by PV inverters located at the end of feeder, to decrease the power loss across MV distribution systems [38]. Certain methods are also proposed to decrease this power loss and the majority of them are based on central control or distributed methods that require communication among the PV inverters [39–46]. Although the communication-based methods are usually more efficient, the cost associated with them is usually high [82]. In addition, according to a recent study, the application of communication-based reactive power compensation methods for LV grid loss minimization may have a marginal effect on the loss reduction and is not an economic solution [81].

Regardless of the method applied to the inverter controller, the PV inverters need to be oversized to absorb the reactive power. The minimum power factor is usually considered as 0.9, which means that the inverter capacity has to be increased by around 11%. An alternative is that during high PV generation periods, a part of the active power is curtailed to prevent the overloading of the inverter. Considering a minimum power factor of 0.9 resulting in the maximum reactive power absorption of 48% of nominal inverter capacity, the active power has to be curtailed at around 88% to prevent the inverter overloading. This curtailment does not mean that around 12% of energy generated by PV system is lost. For the PV system of Fig. 8, this energy loss is less than 1%. For a power factor of minimum 0.95, the active power curtailment level is around 94%. It should be noted that for power factors of 0.95 and 0.9, when the PV generation is less than 94% and 88% of nominal inverter capacity, respectively, active power curtailment is not needed.

3.5 Demand Response (DR)

There are some thermal storage units in the grid, such as freezers, refrigerators and off-peak heating systems, which can be managed and controlled to improve the local generation-consumption balance during high PV generation periods. These thermal storage units and other controllable loads in the grid can increase the PV hosting capacity of that grid. DR can be applied to the loads directly and a central server can generate the control signals. Moreover, loads can also be controlled indirectly using a bonus tariff incentive system [47]. Applying DR can reduce the energy that is transferred from and to LV grids and also decrease the reverse power flow and peak load power [48]. Increasing the local consumption decreases the net power injected into the grid by PV inverters; therefore, the total PV installation in the grid can be increased.

Although DR can shape the load consumption and decrease the power loss in the grid, it cannot be considered as a reliable method for grid voltage control as DR depends to a great extent on customers' consumption patterns, and some controllable domestic loads are not necessarily used on a daily basis [47, 49]. However, a combination of DR with active power curtailment can decrease the energy loss caused by curtailment [50]. In addition, it can also decrease the energy storage required for overvoltage prevention in the grid [51].

3.6 Application of Electrical Energy Storage Systems (EESSs)

3.6.1 Stationary energy storage

In recent years, EESS have been proposed as a solution to overcome the challenges of renewable energy technologies. To prevent the overvoltage in high PV penetration conditions, EESS can be applied in order to store a part of the energy generated by PVs and limit the amount of active power injected into the grid by PV units. To this aim, the output power of PV is limited to a specific amount by storing the excess energy, and this stored energy can be used when load consumption or the price of electricity is high [51]. An overview of a PV system with EESS is depicted in Fig. 12. As can be seen, EESS can be connected into the DC bus of the PV inverter or be connected separately to the AC terminal. The active and reactive powers are controlled independently in PV inverters and can be controlled locally using fixed set points or droop based methods. When the system is centrally controlled, the droops are replaced by some control signals generated by a central server.

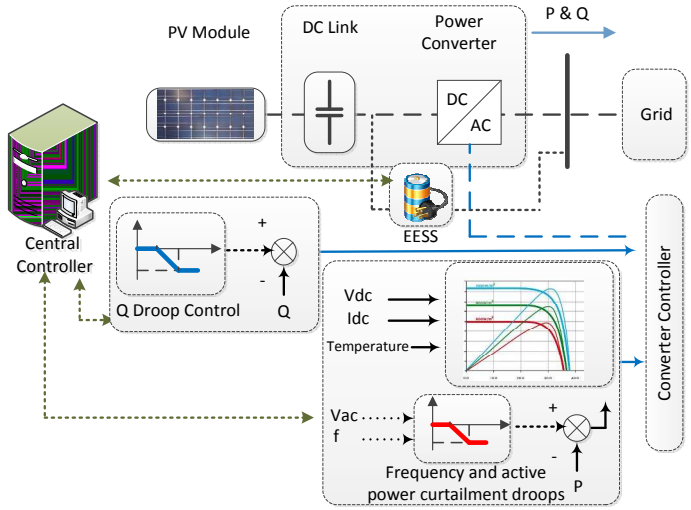

Fig. 12. *An overview of a PV system with EESS.*

Although battery technologies have developed in recent years, the main concern about the application of EESS is still the initial investment in the system, and a strategy to optimize the size of energy storage units in the distribution system is required. A cost-benefit analysis can be performed to determine the required investment. In addition, several other factors should be considered, including: the possibility of EESS for undervoltage prevention in high load condition; the energy storage life time under different operation modes; the effect of energy storage utilization on operation cost of transformer with OLTC and step voltage regulators; and the effects of EESS on reduction of peak power generation cost [52]. As both PV output and load consumption are stochastic, the uncertainties associated with them have to be modeled to determine the minimum EESS to be installed in LV grids. This procedure usually involves a computationally expensive time-series analysis. To model these uncertainties without the time-series study problems, PV generation and load consumption can be modeled using remaining power curves (RPCs) with different occurrence probabilities [50].

Although the EESS utilization is an effective solution to prevent overvoltage, advanced methods are needed to control these units as efficiently as possible. Different static and dynamic control strategies can be applied to EESS to increase the self-consumption and prevent the overvoltage in the grid [53–60]. Compared to the static control methods, voltage dependent dynamical charging methods have better performance; however, the benefits to the customers located at the critical voltage node may be reduced and mechanisms are required to share the costs among all system owners [61]. In order to have equal investment in EESS from all customers and decrease the EESS size, variable droop-based methods can be implemented [62]. Efficient control of EESS can be performed to minimize the total distribution losses

and control the grid voltage in high PV penetration conditions. To this aim, a decision technique is usually required to determine a power reference schedule for the control system of OLTC, controllable loads, and EESS [63, 64].

Coordinated use of EESS and other overvoltage prevention methods can increase the effectiveness of voltage control while reducing the need for EESS. Droop control of EESS and local reactive power control of PV inverters can provide efficient voltage control in the grid in high PV penetration conditions [62]. Coordination of EESSs and active and reactive powers of PV inverters through a combination of localized and distributed control methods can minimize the active power curtailment and prevent the overvoltage while reducing the energy storage need [65]. By using both localized and communication-based methods, the communication failure can only reduce the efficiency by increasing the active power curtailment and the power absorbed by energy storage units. It is worth mentioning that without reactive power compensation, the EESS capacity required for overvoltage prevention increases considerably [33].

3.6.2 Electric Vehicle

Electric vehicle (EV) also can be considered as an EESS solution for overvoltage prevention. The EV charging stations can be used as voltage support facilities in LV grids with high PV penetration and coordination of EV charging facilities and PV units can potentially mitigate the voltage rise in the grid [16, 66–71]. Prioritizing EV charging around peak generation hours can effectively decrease the required EESS and prevent the overvoltage during high PV generation hours [49]. In addition, in order to minimize the required EESS capacity, the charging stations have to be located farthest from the transformer [66]. The EV home charging also can decrease the voltage rise during high PV generation periods; however, according to the home-charging concept, the customers would tend to start charging their EVs when they reach home; therefore, the majority of EV charging occurs at the time when there are no or low PV generation [50].

3.7 Combination of voltage control methods

Selecting the most efficient methods highly depends on the grid structure and the grid regulatory specifications. Combination of active power curtailment and reactive power absorption [83–88], EESS and reactive power absorption [33, 62, 89], and transformer with OLTC and reactive power absorption [23, 90–92], can potentially provide more efficient voltage control. Economic evaluation cannot be performed

without considering the grid structure, the future grid extension plans, the future development in renewable technologies, the current PV penetration in the grid and possible future PV installations, the standards and grid codes applied to the grids, and possibility of active power curtailment and its permissible level. As a result, a decision making procedure is required to determine the most techno-economic solution for overvoltage prevention in each grid and the result associated with an individual LV grid cannot be generalized to other grids.

4. Discussion on coordination strategies for voltage control in high PV penetration conditions

Methods that are suitable for overvoltage prevention and increasing the LV grid PV hosting capacity can be applied using both localized and centralized control strategies. Centralized methods have better performance [93, 94]; however, voltage control using central control approaches requires high speed and fast computers and broadband networks, all of which imply substantial investment [95]. Local control strategies for voltage control act only according to local measurements and do not need broadband networks. However, they are not as effective as central control approaches due to a lack of broader information. To clarify, consider an *N*-bus power system with the following power flow equations at bus *k*:

$$\begin{cases} P_k = \sum_{n=1}^{N} V_k V_n Y_{kn} \cos(\theta_{kn} + \delta_n - \delta_k) \\ Q_k = -\sum_{n=1}^{N} V_k V_n Y_{kn} \sin(\theta_{kn} + \delta_n - \delta_k) \end{cases} \tag{9}$$

where P is the active power, Q is the reactive power, V is the magnitude of bus voltage phasor, δ is the angle of bus voltage phasor, Y is the magnitude of *Ybus*, and θ is the angle of *Ybus*. Expanding these two equations in a Taylor series for the initial estimate, and neglecting all higher order terms results in the following set of linear equations:

$$\begin{bmatrix} \Delta P \\ \Delta Q \end{bmatrix} = \underbrace{\begin{vmatrix} \left[\frac{\partial P}{\partial \delta}\right] & \left[\frac{\partial P}{\partial V}\right] \\ \left[\frac{\partial Q}{\partial \delta}\right] & \left[\frac{\partial Q}{\partial V}\right] \end{vmatrix}}_{Jacobian} \begin{bmatrix} \Delta \delta \\ \Delta V \end{bmatrix} \tag{10}$$

By solving the previous equation, the voltage sensitivity matrix can be extracted as follows:

$$\begin{bmatrix} \Delta \delta \\ \Delta V \end{bmatrix} = \begin{vmatrix} [S_{\delta P}] & [S_{\delta Q}] \\ [S_{VP}] & [S_{VQ}] \end{vmatrix} \begin{bmatrix} \Delta P \\ \Delta Q \end{bmatrix} \tag{11}$$

where S_{VP} and S_{VQ} are the sensitivities of the bus voltage magnitudes to the active and reactive powers, respectively, and $S_{\delta P}$ and $S_{\delta Q}$ are the sensitivities of the bus voltage angles. The magnitude of the voltage at bus *k* can be calculated using the following linear equation:

$$V_k = V_S + \sum_{n=2}^{N} \left(S_{VP,k,n} P_n + S_{VQ,k,n} Q_n \right) \tag{12}$$

where V_s is the voltage at the connection point to the grid. Based on this equation, it can be found that the active and reactive power generated or consumed at any location in an LV grid affects the whole grid. To clarify, suppose that the two-bus system of Fig. 3 is converted to a three-bus system with the following conditions: the PV generation is divided into P_2 and P_3 and the line impedance is divided into Z_2 and Z_3, as shown in Fig. 13. Using (9)-(12), the voltage at bus 3 is then:

$$V_3 = V_1 + \frac{R_2 P_2 + X_2 Q_2}{V_1} + \frac{(R_2 + R_3) P_3 + (X_2 + X_3) Q_3}{V_1} \tag{13}$$

Based on (13), the active power and the reactive power injected or consumed at bus 3 have more effect on V_3 than active and reactive powers at bus 2; therefore, controlling the active and reactive power at bus 3 is more effective than bus 2. This is a simplified three-bus radial grid, and for a real LV grid with complex configuration, suitable locations have to be found for the most efficient grid voltage control. To this aim, the grid data as well as the information of generation and consumption in different buses have to be known.

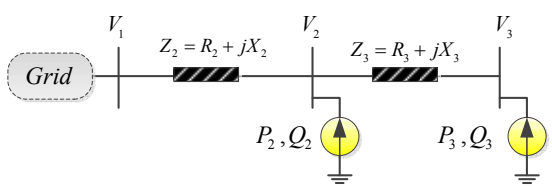

Fig. 13. *A three-bus system with two PV installations.*

Local control strategies for voltage control are not as effective as central control approaches due to a lack of information about other buses. On the other hand, there are two main drawbacks associated with centralized control methods; first, the associated cost and second, the reliability of these methods. The reliability of centralized methods is less than localized methods due to the possibility of communication failure. To overcome this challenge, centralized and localized control methods can be combined to provide a robust method for overvoltage prevention [83]. On the other hand, the cost associated with the centralized methods is high and can limit implementation. Distributed control methods are another alternative and can be applied for voltage control. These methods usually require communication; however, broadband and fast communication are generally not required [95, 96]. In these methods, locally controlled units are coordinated through communication links and the communication failure can only reduce the efficiency. Although these methods do not lead to network-wide optimal behavior [97], the costs

associated with implementing distributed control methods are lower than for centrally controlled methods. The associated cost varies according to the grid structure and the control algorithm.

5. Conclusion

In this paper, a detailed and in-depth review of methods and strategies proposed to prevent overvoltage in LV grids with PV was provided, including comments and thoughts on the methodologies referenced. The overvoltage caused by high PV penetration and the solutions for facilitating high share of PV systems were illustrated using the provided mathematical framework, and an evaluation of localized, distributed and centralized voltage control methods was presented using the voltage sensitivity analysis. The effectiveness of overvoltage prevention methods, i.e., reinforcement of current grids, application of active transformers, active power curtailment, reactive power absorption by PV inverters, demand response, and application of electrical energy storage systems were discussed. According to the analyses, without knowledge of the grid data specifically the impedances of the grid conductors, efficient voltage control is difficult; therefore, the grid data has to be estimated as precisely as possible using relevant methods, if the relevant information is not available. In addition, selecting a proper method to increase the PV hosting capacity of an LV grid highly depends on the grid structure and the grid regulatory specifications. However, combination of different methods can provide the most efficient solutions for overvoltage prevention. The concluding remarks regarding the proposed methods are listed below:

- From the technical point of view, the grid reinforcement is highly effective for the overvoltage prevention; however, it is an expensive solution and the cost associated with the grid reinforcement highly depends on the grid structure, types of conductors, and the grid development plan.
- Active transformers are applicable to almost all LV grids and have a high potential for increasing the PV hosting capacity of LV grids. By efficient control of active transformers, the limiting factor of installing new PV systems will no longer be overvoltage in the grid but rather the ratings of the grid components. Advanced local control methods for the efficient control of active transformers are needed, as the ICT infrastructures can increase the overall cost considerably and decrease the economic efficiency.
- Active power curtailment is probably an unavoidable solution in high-PV-penetration conditions; without accepting a level of curtailment, reaching a high share of PV is quite expensive. Accepting a level of curtailment is specifically important for determining the size of electrical energy storage required for overvoltage prevention. The energy loss associated with active power curtailment depends on factors such as the orientation and inclination of PV panels, weather

conditions, and the curtailment strategy. By applying advanced voltage-dependent curtailment strategies, this energy loss can be decreased.

- Demand response depends to a great extent on customers' domestic loads that may not be used on a daily basis, or loads of which their consumption is not considerable compared to the PV generation during peak generation periods. Shifting the EV charging to the peak-PV-generation hours by controlled EV charging can decrease the net power injected into the grid and prevent overvoltage during high-PV-generation hours, when the penetration of EVs is increased.
- Reactive power absorption by PV inverters can also increase the PV hosting capacity of LV grids. The effectiveness of reactive power absorption depends to a large extent on the grid's characteristics; however, in most cases the PV hosting capacity can be increased by more than 20% by applying reactive power absorption. Therefore, when the PV penetration in the grid is high, the reactive power absorption can considerably decrease the risk of overvoltage and increase the overall efficiency of the grid by preventing the disconnection of PV inverters or active power curtailment. In general, localized droop methods applied to the new PV inverters can provide proper voltage support without need for ICT infrastructures, and centralized methods are not needed in many cases.
- Electrical energy storage application has a high potential for overcoming the challenges associated with PV systems, and, in addition to its application for overvoltage prevention, it can be used to prevent the overloading of the grid components and trade power in electricity markets. Localized methods for energy storage charging control are not effective solutions and can considerably increase the energy storage capacity that is required for overvoltage prevention; therefore advanced control methods are needed to decrease the initial investment associated with the ICT infrastructures as well as provide more efficient energy storage management.

6. References

[1] International Energy Agency: 'Snapshot of Global PV Markets 2014' (2015)

[2] International Energy Agency: 'Trends 2014 in Photovoltaic Applications: Survey Report of Selected IEA Countries between 1992 and 2013' (2014)

[3] European Photovoltaic Industry Association: 'Global Market Outlook- For Photovoltaics 2014-2018' (2014)

[4] European Photovoltaic Industry Association: 'Global Market Outlook for Photovoltaics 2013-2017' (2013)

[5] SolarPower Europe: 'Global Market Outlook For Solar Power / 2016 - 2020' (2016).

[6] Westacott, P., Candelise, C.: 'Assessing the impacts of photovoltaic penetration across an entire low-voltage distribution network containing 1.5 million customers'*IET Renew. Power Gener.*, 2016, **10**, (4), pp. 460–466.

[7] Shayani, R.A., de Oliveira, M.A.G., Oliveira, M. De: 'Photovoltaic generation penetration limits in radial distribution systems'*IEEE Trans. Power Syst.*, 2011, **26**, (3), pp. 1625–1631.

[8] Pezeshki, H., Wolfs, P.J., Ledwich, G.: 'Impact of High PV Penetration on Distribution Transformer Insulation Life'*IEEE Trans. Power Deliv.*, 2014, **29**, (3), pp. 1212–1220.

[9] Beltran, H., Perez, E., Aparicio, N., Rodriguez, P.: 'Daily Solar Energy Estimation for Minimizing Energy Storage Requirements in PV Power Plants'*IEEE Trans. Sustain. Energy*, 2013, **4**, (2), pp. 474–481.

[10] Perez, E., Beltran, H., Aparicio, N., Rodriguez, P.: 'Predictive Power Control for PV Plants With Energy Storage'*IEEE Trans. Sustain. Energy*, 2013, **4**, (2), pp. 482–490.

[11] Traube, J., Lu, F., Maksimovic, D., *et al.*: 'Mitigation of Solar Irradiance Intermittency in Photovoltaic Power Systems With Integrated Electric-Vehicle Charging Functionality'*IEEE Trans. Power Electron.*, 2013, **28**, (6), pp. 3058–3067.

[12] Wang, G., Ciobotaru, M., Agelidis, V.G.: 'Power Smoothing of Large Solar PV Plant Using Hybrid Energy Storage'*IEEE Trans. Sustain. Energy*, 2014, **5**, (3), pp. 834–842.

[13] Wang, T., Kamath, H., Willard, S.: 'Control and Optimization of Grid-Tied Photovoltaic Storage Systems Using Model Predictive Control'*IEEE Trans. Smart Grid*, 2014, **5**, (2), pp. 1010–1017.

[14] Mohammadi, P., Mehraeen, S.: 'Challenges of PV Integration in Low-Voltage Secondary Networks'*IEEE Trans. Power Deliv.*, 2016, pp. 1–1.

[15] Hossain, M.I., Yan, R., Saha, T.K.: 'Investigation of the interaction between step voltage regulators and large-scale photovoltaic systems regarding voltage regulation and unbalance'*IET Renew. Power Gener.*, 2016, **10**, (3), pp. 299–309.

[16] Weckx, S., Member, S., Driesen, J., Member, S.: 'Load Balancing With EV Chargers and PV Inverters in Unbalanced Distribution Grids'2015, **6**, (2), pp. 635–643.

[17] Wolfs, P., Masoum, M.A.S., Su, X.: 'Comprehensive optimal photovoltaic inverter control strategy in unbalanced three-phase four-wire low voltage distribution networks'*IET Gener. Transm. Distrib.*, 2014, **8**, (11), pp. 1848–1859.

[18] Bajo, C.G., Hashemi, S., Kjær, S.B., Yang, G., Østergaard, J.: 'Voltage unbalance mitigation in LV networks using three-phase PV systems', in '2015 IEEE International Conference on Industrial Technology (ICIT)' (IEEE, 2015), pp. 2875–2879

[19] Schwanz, D., Moller, F., Ronnberg, S.K., Meyer, J., Bollen, M.H.J.: 'Stochastic Assessment of Voltage Unbalance due to Single-Phase-Connected Solar Power'*IEEE Trans. Power Deliv.*, 2016, pp. 1–1.

[20] Stetz, T., Marten, F., Braun, M.: 'Improved Low Voltage Grid-Integration of Photovoltaic Systems in Germany'*IEEE Trans. Sustain. Energy*, 2013, **4**, (2), pp. 534–542.

[21] Liu, X., Aichhorn, A., Liu, L., Li, H.: 'Coordinated Control of Distributed Energy Storage System With Tap Changer Transformers for Voltage Rise Mitigation Under High Photovoltaic Penetration'*IEEE Trans. Smart Grid*, 2012, **3**, (2), pp. 897–906.

[22] Einfalt, A., Zeilinger, F., Schwalbe, R., Bletterie, B., Kadam, S.: 'Controlling active low voltage distribution grids with minimum efforts on costs and engineering'*IECON Proc. (Industrial Electron. Conf.*, 2013, pp. 7456–7461.

[23] Stetz, T., Diwold, K., Kraiczy, M., Geibel, D., Schmidt, S., Braun, M.: 'Techno-Economic Assessment of Voltage Control Strategies in Low Voltage Grids'*IEEE Trans. Smart Grid*, 2014, **5**, (4), pp. 2125–2132.

[24] Büchner, J., Katzfey, J., Flörcken, O., *et al.*: 'Moderne Verteilernetze für Deutschland' (2014)

[25] Long, C., Ochoa, L.F.: 'Voltage Control of PV-Rich LV Networks: OLTC-Fitted Transformer and Capacitor Banks'*IEEE Trans. Power Syst.*, 2015, pp. 1–10.

[26] Hashemi, S., Heckmann, W., Geibel, D., Degner, T., Østergaard, J.: 'Application of MV/LV Transformers with OLTC for Increasing the PV Hosting Capacity of LV Grids', in '31st European Photovoltaic Solar Energy Conference and Exhibition (EU PVSEC 2015), Hamburg, Germany.' (2015)

[27] Etherden, N., Bollen, M.H.J.: 'Overload and overvoltage in low-voltage and medium-voltage networks due to renewable energy – some illustrative case studies'*Electr. Power Syst. Res.*, 2014, **114**, pp. 39–48.

[28] Yap, W.K., Havas, L., Overend, E., Karri, V.: 'Neural network-based active power curtailment for overvoltage prevention in low voltage feeders'*Expert Syst. Appl.*, 2014, **41**, (4), pp. 1063–1070.

[29] Hashemi i, S., Yang, G., Østergaard, J.: 'Determination of PV Penetration in LV Networks Considering Stochastic Behavior of Loads and PVs', in 'Proceedings of 2nd International Workshop on Integration of Solar Power into Power Systems' (2012), pp. 1–6

[30] Tonkoski, R., Lopes, L.A.C., El-Fouly, T.H.M.: 'Coordinated Active Power Curtailment of Grid Connected PV Inverters for Overvoltage Prevention'*IEEE Trans. Sustain. Energy*, 2011, **2**, (2), pp. 139–147.

[31] Tonkoski, R., Lopes, L.A.C.: 'Impact of active power curtailment on overvoltage prevention and energy production of PV inverters connected to low voltage residential feeders'*Renew. Energy*, 2011, **36**, (12), pp. 3566–3574.

[32] Tonkoski, R., Turcotte, D., El-Fouly, T.H.M.: 'Impact of High PV Penetration on Voltage Profiles in Residential Neighborhoods'*IEEE Trans. Sustain. Energy*, 2012, **3**, (3), pp. 518–527.

[33] Hashemi, S., Ostergaard, J., Yang, G.: 'Effect of reactive power management of PV inverters on need for energy storage' (2013), pp. 2304–2308

[34] Demirok, E., González, P.C., Frederiksen, K.H.B., Sera, D., Rodriguez, P., Teodorescu, R.: 'Local Reactive Power Control Methods for Overvoltage Prevention of Distributed Solar Inverters in Low-Voltage Grids'*IEEE J. Photovoltaics*, 2011, **1**, (2), pp. 174–182.

[35] Wandhare, R.G.R.G., Agarwal, V.: 'Reactive Power Capacity Enhancement of a PV-Grid System to Increase PV Penetration Level in Smart Grid Scenario'*IEEE Trans. Smart Grid*, 2014, **5**, (4), pp. 1845–1854.

[36] Alam, M.J.E., Muttaqi, K.M., Sutanto, D.: 'A Multi-Mode Control Strategy for VAr Support by Solar PV Inverters in Distribution Networks'*IEEE Trans. Power Syst.*, 2015, **30**, (3), pp. 1316–1326.

[37] Bletterie, B., Kadam, S., Bolgaryn, R., Zegers, A.: 'Voltage control with PV inverters in low voltage networks – In depth analysis of different concepts and parameterization criteria'*IEEE Trans. Power Syst.*, 2016, pp. 1–1.

[38] Lelis, I.S., Drougakis, I.A., Pompodakis, E.E., Alexiadis, M.C.: 'Photovoltaic systems in low-voltage networks and overvoltage correction with reactive power control'*IET Renew. Power Gener.*, 2016, **10**, (3), pp. 410–417.

[39] Calderaro, V., Conio, G., Galdi, V., Massa, G., Piccolo, A.: 'Optimal Decentralized Voltage Control for Distribution Systems With Inverter-Based Distributed Generators'*IEEE Trans. Power Syst.*, 2014, **29**, (1), pp. 230–241.

[40] Di Fazio, A.R., Fusco, G., Russo, M., Fazio, A.R. Di: 'Decentralized Control of Distributed Generation for Voltage Profile Optimization in Smart Feeders'*IEEE Trans. Smart Grid*, 2013, **4**, (3), pp. 1586–1596.

[41] Jahangiri, P., Aliprantis, D.C., Member, S.S.: 'Distributed Volt/VAr Control by PV Inverters'*IEEE Trans. Power Syst.*, 2013, **28**, (3), pp. 3429–3439.

[42] Liu, L., Li, H., Xue, Y., Liu, W., Member, S.: 'Reactive Power Compensation and Optimization Strategy for Grid-Interactive Cascaded Photovoltaic Systems'*IEEE Trans. Power Electron.*, 2014, **PP**, (99), pp. 1–1.

[43] Samadi, A., Eriksson, R., Soder, L., *et al.*: 'Coordinated Active Power-Dependent Voltage Regulation in Distribution Grids With PV Systems'*IEEE Trans. Power Deliv.*, 2014, **29**, (3), pp. 1454–1464.

[44] Kolenc, M., Papič, I., Blažič, B.: 'Coordinated reactive power control to achieve minimal operating costs'*Int. J. Electr. Power Energy Syst.*, 2014, **63**, pp. 1000–1007.

[45] Dall'Anese, E., Dhople, S. V., Giannakis, G.B.: 'Optimal Dispatch of Photovoltaic Inverters in Residential Distribution Systems'*IEEE Trans. Sustain. Energy*, 2014, **5**, (2), pp. 487–497.

[46] AlKaabi, S.S., Khadkikar, V., Zeineldin, H.H.: 'Incorporating PV Inverter Control Schemes for Planning Active Distribution Networks'*IEEE Trans. Sustain. Energy*, 2015, **6**, (4), pp. 1224–1233.

[47] Vogt, M., Heckmann, W., Hubert, J., Degner, T., Bax, L.: 'Local use of PV surplus – load control and thermal storage in a LV grid cell', in '7th International Conference on PV-Hybrids and Mini-Grids' (2014)

[48] Malik, O., Havel, P.: 'Active demand-side management system to facilitate integration of res in low-voltage distribution networks'*IEEE Trans. Sustain. Energy*, 2014, **5**, (2), pp. 673–681.

[49] Marra, F., Yang, G., Traeholt, C., Ostergaard, J., Larsen, E.: 'A Decentralized Storage Strategy for Residential Feeders With Photovoltaics'*IEEE Trans. Smart Grid*, 2014, **5**, (2), pp. 974–981.

[50] Hashemi, S., Østergaard, J., Yang, G.: 'A Scenario-Based Approach for Energy Storage Capacity Determination in LV Grids With High PV Penetration'*IEEE Trans. Smart Grid*, 2014, **5**, (3), pp. 1514–1522.

[51] Hashemi Toghroljerdi, S., Yang, G., Østergaard, J., You, S., Cha, S.-T.: 'Storage application in smart grid with high PV and EV penetration' (2013), pp. 1–5

[52] Yang, Y., Li, H., Aichhorn, A., Zheng, J., Greenleaf, M.: 'Sizing Strategy of Distributed Battery Storage System With High Penetration of Photovoltaic for Voltage Regulation and Peak Load Shaving'*IEEE Trans. Smart Grid*, 2014, **5**, (2), pp. 982–991.

[53] Goli, P., Shireen, W.: 'PV Integrated Smart Charging of PHEVs Based on DC Link Voltage Sensing'*IEEE Trans. Smart Grid*, 2014, **5**, (3), pp. 1421–1428.

[54] Nagarajan, A., Ayyanar, R.: 'Design and Strategy for the Deployment of Energy Storage Systems in a Distribution Feeder With Penetration of Renewable Resources'*IEEE Trans. Sustain. Energy*, 2015, **6**, (3), pp. 1085–1092.

[55] Nykamp, S., Bosman, M.G.C., Molderink, A., Hurink, J.L., Smit, G.J.M.: 'Value of Storage in Distribution Grids—Competition or Cooperation of Stakeholders?'*IEEE Trans. Smart Grid*, 2013, **4**, (3), pp. 1361–1370.

[56] Ru, Y., Kleissl, J., Martinez, S.: 'Storage Size Determination for Grid-Connected Photovoltaic Systems'*IEEE Trans. Sustain. Energy*, 2013, **4**, (1), pp. 68–81.

[57] Takagi, M., Iwafune, Y., Yamaji, K., *et al.*: 'Economic Value of PV Energy Storage Using Batteries of Battery-Switch Stations'*IEEE Trans. Sustain. Energy*, 2013, **4**, (1), pp. 164–173.

[58] Tant, J., Geth, F., Six, D., Tant, P., Driesen, J.: 'Multiobjective Battery Storage to Improve PV Integration in Residential Distribution Grids'*IEEE Trans. Sustain. Energy*, 2013, **4**, (1), pp. 182–191.

[59] Wang, Y., Lin, X., Pedram, M.: 'Adaptive Control for Energy Storage Systems in Households With Photovoltaic Modules'*IEEE Trans. Smart Grid*, 2014, **5**, (2), pp. 992–1001.

[60] Wang, Y., Tan, K.T., Peng, X.Y., So, P.L.: 'Coordinated Control of Distributed Energy-Storage Systems for Voltage Regulation in Distribution Networks'*IEEE Trans. Power Deliv.*, 2016, **31**, (3), pp. 1132–1141.

[61] Von Appen, J., Stetz, T., Braun, M., Schmiegel, A.: 'Local Voltage Control Strategies for PV Storage Systems in Distribution Grids'*IEEE Trans. Smart Grid*, 2014, **5**, (2), pp. 1002–1009.

[62] Kabir, M.N., Mishra, Y., Ledwich, G., Dong, Z.Y., Wong, K.P.: 'Coordinated Control of Grid-Connected Photovoltaic Reactive Power and Battery Energy Storage Systems to Improve the Voltage Profile of a Residential Distribution Feeder'*IEEE Trans. Ind. Informatics*, 2014, **10**, (2), pp. 967–977.

[63] Ziadi, Z., Taira, S., Oshiro, M., Funabashi, T.: 'Optimal Power Scheduling for Smart Grids Considering Controllable Loads and High Penetration of Photovoltaic Generation'*IEEE Trans. Smart Grid*, 2014, **PP**, (99), pp. 1–10.

[64] Marinelli, M., Sossan, F., Costanzo, G.T., Bindner, H.W.: 'Testing of a Predictive Control Strategy for Balancing Renewable Sources in a Microgrid'*Sustain. Energy, IEEE Trans.*, 2014, **PP**, (99), p. 1.

[65] Mokhtari, G., Ghosh, A., Nourbakhsh, G., Ledwich, G.: 'Smart Robust Resources Control in LV Network to Deal With Voltage Rise Issue'*IEEE Trans. Sustain. Energy*, 2013, **4**, (4), pp. 1043–1050.

[66] Marra, F., Yang, G.Y., Traeholt, C., *et al.*: 'EV Charging Facilities and Their Application in LV Feeders With Photovoltaics'*IEEE Trans. Smart Grid*, 2013, **4**, (3), pp. 1533–1540.

[67] Brenna, M., Dolara, a, Foiadelli, F., Leva, S., Longo, M.: 'Urban Scale Photovoltaic Charging Stations for Electric Vehicles'*Sustain. Energy, IEEE Trans.*, 2014, **5**, (4), pp. 1234–1241.

[68] Chukwu, U.C., Mahajan, S.M.: 'V2G parking lot with pv rooftop for capacity enhancement of a distribution system'*IEEE Trans. Sustain. Energy*, 2014, **5**, (1), pp. 119–127.

[69] Van Roy, J., Leemput, N., Geth, F., Buscher, J., Salenbien, R., Driesen, J.: 'Electric Vehicle Charging in an Office Building Microgrid With Distributed Energy Resources'*IEEE Trans. Sustain. Energy*, 2014, **5**, (4), pp. 1389–1396.

[70] Van Roy, J., Leemput, N., Geth, F., Salenbien, R., Buscher, J., Driesen, J.: 'Apartment Building Electricity System Impact of Operational Electric Vehicle Charging Strategies'*IEEE Trans. Sustain. Energy*, 2014, **5**, (1), pp. 264–272.

[71] Foster, J.M., Trevino, G., Kuss, M., Caramanis, M.C.: 'Plug-In Electric Vehicle and Voltage Support for Distributed Solar: Theory and Application'*IEEE Syst. J.*, 2013, **7**, (4), pp. 881–888.

[72] Arnold, G., Degner, T., Gafaro, F., *et al.*: 'Aktives, intelligentes Niederspannungsnetz'2014.

[73] Navarro-Espinosa, A., Ochoa, L.F.: 'Probabilistic Impact Assessment of Low Carbon Technologies in LV Distribution Systems'*IEEE Trans. Power Syst.*, 2016, **31**, (3), pp. 2192–2203.

[74] Santos-Martin, D., Lemon, S.: 'Simplified Modeling of Low Voltage Distribution Networks for PV Voltage Impact Studies'*IEEE Trans. Smart Grid*, 2016, **7**, (4), pp. 1924–1931.

[75] Hoke, A., Member, S.S., Butler, R., Hambrick, J., Kroposki, B.: 'Steady-State Analysis of Maximum Photovoltaic Penetration Levels on Typical Distribution Feeders'*IEEE Trans. Sustain. Energy*, 2013, **4**, (2), pp. 350–357.

[76] Pudjianto, D., Djapic, P., Aunedi, M., *et al.*: 'Smart control for minimizing distribution network reinforcement cost due to electrification'*Energy Policy*, 2013, **52**, pp. 76–84.

[77] Pfalzgraf, M., Tschendel, C., Degner, T., *et al.*: 'Active, intelligent low voltage networks - concept, realisation and field test results', in '22nd International Conference and Exhibition on Electricity Distribution (CIRED 2013)' (Institution of Engineering and Technology, 2013), pp. 0819–0819

[78] Yang, J., Chen, X., Lu, J., Fu, X., Mao, C., Wang, D.: 'Fast and continuous on-load voltage regulator based on electronic power transformer'*IET Electr. Power Appl.*, 2013, **7**, (6), pp. 499–508.

[79] Procopiou, A.T., Ochoa, L.F.: 'Voltage Control in PV-Rich LV Networks without Remote Monitoring'*IEEE Trans. Power Syst.*, 2016, pp. 1–1.

[80] Gagrica, O., Nguyen, P.H., Kling, W.L., Uhl, T.: 'Microinverter Curtailment Strategy for Increasing Photovoltaic Penetration in Low-Voltage Networks'*IEEE Trans. Sustain. Energy*, 2015, **6**, (2), pp. 369–379.

[81] Stetz, T., Diwold, K., Kraiczy, M., Geibel, D., Schmidt, S., Braun, M.: 'Techno-economic assessment of voltage control strategies in low voltage grids'*IEEE Trans. Smart Grid*, 2014, **5**, (4), pp. 2125–2132.

[82] Castilla, M., Velasco, M., Miret, J., Martí, P., Momeneh, A.: 'Comparative study of reactive power control methods for photovoltaic inverters in low-voltage grids'*IET Renew. Power Gener.*, 2016, **10**, (3), pp. 310–318.

[83] Weckx, S., Gonzalez, C., Driesen, J.: 'Combined Central and Local Active and Reactive Power Control of PV Inverters'*IEEE Trans. Sustain. Energy*, 2014, **5**, (3), pp. 776–784.

[84] Su, X., Masoum, M.A.S., Wolfs, P.J.: 'Optimal PV Inverter Reactive Power Control and Real Power Curtailment to Improve Performance of Unbalanced Four-Wire LV Distribution Networks'*IEEE Trans. Sustain. Energy*, 2014, **5**, (3), pp. 967–977.

[85] Calderaro, V., Conio, G., Galdi, V., Massa, G., Piccolo, A.: 'Active management of renewable energy sources for maximizing power production'*Int. J. Electr. Power Energy Syst.*, 2014, **57**, pp. 64–72.

[86] Denegri, G.B., Procopio, R., Invernizzi, M., Delfino, F.: 'Feedback linearisation oriented approach to Q–V control of grid connected photovoltaic units'*IET Renew. Power Gener.*, 2012, **6**, (5), pp. 324–339.

[87] Moawwad, A., Khadkikar, V., Kirtley, J.L.: 'A New P-Q-V Droop Control Method for an Interline Photovoltaic (I-PV) Power System'*IEEE Trans. Power Deliv.*, 2013, **28**, (2), pp. 658–668.

[88] Olivier, F., Aristidou, P., Ernst, D., Van Cutsem, T.: 'Active Management of Low-Voltage Networks for Mitigating Overvoltages Due to Photovoltaic Units'*IEEE Trans. Smart Grid*, 2016, **7**, (2), pp. 926–936.

[89] Adhikari, S., Li, F.: 'Coordinated V-f and P-Q Control of Solar Photovoltaic Generators With MPPT and Battery Storage in Microgrids'*IEEE Trans. Smart Grid*, 2014, **5**, (3), pp. 1270–1281.

[90] Agalgaonkar, Y.P., Member, S., Pal, B.C., Jabr, R.A., Member, S.: 'Distribution Voltage Control Considering the Impact of PV Generation on Tap Changers and Autonomous Regulators'2014, **29**, (1), pp. 182–192.

[91] Weckx, S., Gonzalez, C., De Rybel, T., Driesen, J.: 'LS-SVM-based on-load tap changer control for distribution networks with rooftop PV's', in 'IEEE PES ISGT Europe 2013' (IEEE, 2013), pp. 1–5

[92] Jashfar, S., Esmaeili, S.: 'Volt/var/THD control in distribution networks considering reactive power capability of solar energy conversion'*Int. J. Electr. Power Energy Syst.*, 2014, **60**, pp. 221–233.

[93] Alam, M.J.E., Muttaqi, K.M., Sutanto, D.: 'An approach for online assessment of rooftop solar PV impacts on low-voltage distribution networks'*IEEE Trans. Sustain. Energy*, 2014, **5**, (2), pp. 663–672.

[94] Kanchev, H., Colas, F., Lazarov, V., Francois, B.: 'Emission Reduction and Economical Optimization of an Urban Microgrid Operation Including Dispatched PV-Based Active Generators'*IEEE Trans. Sustain. Energy*, 2014, **5**, (4), pp. 1397–1405.

[95] Mokhtari, G., Nourbakhsh, G., Ghosh, A.: 'Smart coordination of energy storage units (ESUs) for voltage and loading management in distribution networks'*IEEE Trans. Power Syst.*, 2013, **28**, (4), pp. 4812–4820.

[96] Reeves, D., Nourbakhsh, G., Mokhtari, G., Ghosh, A.: 'A distributed control based coordination scheme of household PV systems for overvoltage prevention', in '2013 IEEE Power & Energy Society General Meeting' (IEEE, 2013), pp. 1–5

[97] Worthmann, K., Kellett, C.M., Braun, P., Grune, L., Weller, S.R.: 'Distributed and Decentralized Control of Residential Energy Systems Incorporating Battery Storage'*IEEE Trans. Smart Grid*, 2015, **6**, (4), pp. 1914–1923.