Adiabatic continuous stirred tank reactor

Schroll-Fleischer, Eskild; Wu, Hao; Huusom, Jakob Kjøbsted; Jørgensen, John Bagterp

Publication date:
2017

Document Version
Publisher's PDF, also known as Version of record

Citation (APA):
Schroll-Fleischer, E., Wu, H., Huusom, J. K., & Jørgensen, J. B. (2017). *Adiabatic continuous stirred tank reactor*. DTU Compute. DTU Compute Technical Report-2017 Vol. 12

Adiabatic Continuous Stirred Tank Reactor

Eskild Schroll-Fleischer
Hao Wu
Jakob Kjøbsted Huusom
John Bagterp Jørgensen
September 2017

DTU Compute
Department of Applied Mathematics and Computer Science

DTU Chemical Engineering
Department of Chemical and Biochemical Engineering

Acknowledgments

We acknowledge Innovation Fund Denmark in the project “CITIES: Centre for IT-Intelligent Energy Systems in Cities” (1305-00027B) and the Department of Chemical and Biochemical Engineering at the Technical University of Denmark for the partial funding of this work.

Contents

1 Introduction

The present report documents the adiabatic CSTR experimental setup after it was refurbished in September 2017.

The goal of the refurbishment was firstly to enable computer control of the experiment using the Open Process Control Unified Architecture (OPC-UA) standard, and secondly to improve the experiment for use in course 28845 Chemical Reaction Engineering Laboratory.

Initially the experimental setup is described in terms of programmable logic controller (PLC) hardware, laboratory apparatus and software. This is followed by a description of how to connect to the PLC via OPC-UA.

The appendix contains an experimental guide for use in course 28845, step-by-step instructions on how to control the setup with a computer, sample code and datasheets.

2 Experimental Setup

Sodium thiosulfate and hydrogen peroxide are stored at approximately 0°C in a freezer. A single peristaltic pump with two heads pump the reactants into the adiabatic continuously stirred tank reactor. The flow rate of one of the feeds is measured with a magnetic flow meter. The influent temperatures as well as the temperature of the reaction mixture are measured with thermocouples. The effluent is collected as waste. A process instrumentation diagram (PI&D) of the adiabatic CSTR experiment is presented in Figure 1.

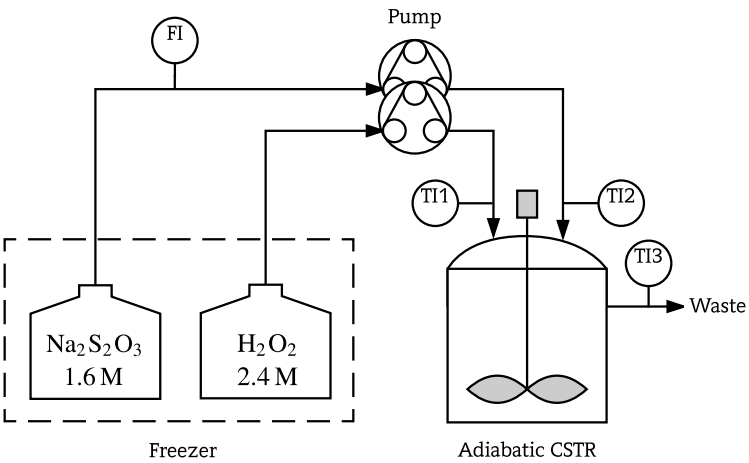

Figure 1: PI&D of the adiabatic CSTR experiment.

In summary, the experiment offers three temperature measurements, a flow

rate measurement and a single manipulated variable being the rotational speed of the pump. The equipment is described in Section 2.1 while the software is described in Section 2.2.

2.1 Laboratory Apparatus

The equipment comprises the process equipment listed in Table 1 and the PLC equipment listed in Table 2. A computer with an ethernet connection is require in order to connect to the PLC via. OPC-UA or to program the PLC.

The pump has to be in analog mode in order for the control system to be able to actuate it. The pump mode may be changed by pushing the “mode” button on the pump such that the display reads “ana”, indicating that the pump is in analog mode.

Table 1: Equipment.

PID Id.	Brand	Model	IO
TI1, TI2, TI3	Generic	K-type	–
Pump	Watson Marlow	323u	$0 - 10\,\mathrm{V}$
FI	ISOIL	MS 501, Ml 210	$4 - 20\,\mathrm{mA}$
Reactor	–	3-neck round bottom flask, $105\,\mathrm{mL}$	–

Table 2: PLC components, all of which are Siemens S7-1200 brand.

Model	IO
CPU 1212c	Ethernet, 8 digital inputs, 2 analog inputs, 6 relay outputs
SM 1234	4 analog inputs, 2 analog outputs
SM 1231	4 thermocouples
HMI KTP400 Basic	Ethernet, 4" touch screen

2.2 Software

Interaction with the experimental equipment is possible through the graphical user interface on the human machine interface (HMI) or through an OPC-UA interface as described in the following. The PLC may be programmed in the Siemens TIA v14 Basic software, this is also described briefly.

The PLC offers the following functionality:

1. Access to analog sensor and actuator values on dimensional scales.
2. Pump start/stop.
3. Pump pulse function where the pump is on for a certain amount of time.

HMI Graphical User Interface

The graphical user interface on the HMI device consists of four screens:

1. PI&D diagram annotated with measurements and actuators.
2. Trend plot showing measurement and actuator values.
3. Large display of measurement and actuator values, and pump pulse function.
4. USB drive connect/disconnect.

There is a menu on every screen with buttons to go to any of the above mentioned screens. Additionally there are buttons to enable or disable the pump and to set the pump to its maximum speed.

The four screens are presented in Figure 2.

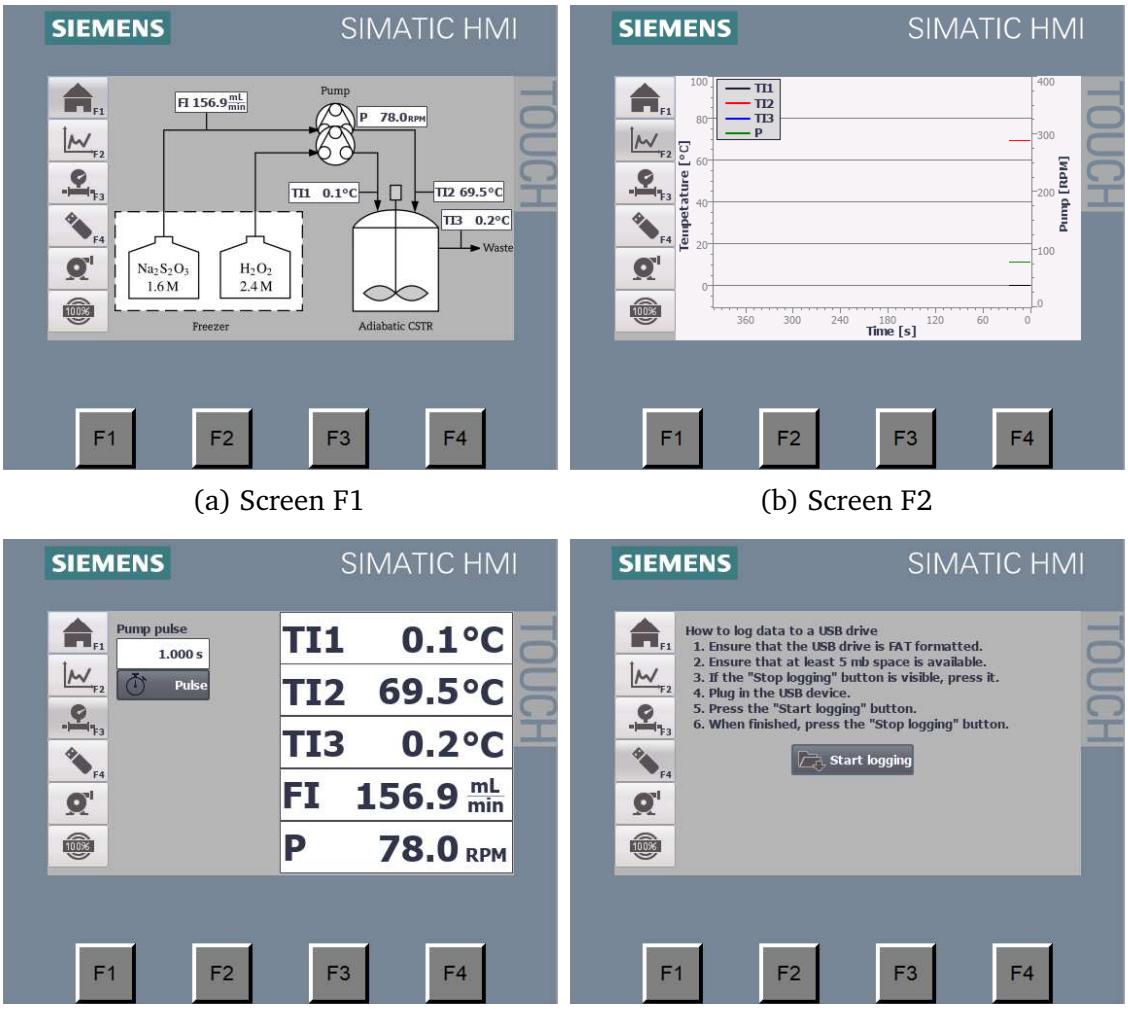

(a) Screen F1

(b) Screen F2

(c) Screen F3

(d) Screen F4

Figure 2: Graphical user interface.

The HMI device is a touch screen hence it is easy to navigate. Input variables may be changed by touching the text field indicating its current value.

The HMI also offers a USB port which may be used to log data to a USB drive (FAT formatted). The current time, the temperature measurements, flow rate measurement and pump set point are logged every second and are saved in a text file format. The Python script listed in Appendix D.2 may be used to convert the data to a Matlab format.

OPC-UA

The process variables which are available via OPC-UA are listed in Table 3. The OPC-UA server is written in Python and the code is listed in Appendix D.1. A guide on how to install and run the OPC-UA server is presented in Appendix C.

Table 3: OPC-UA tags.

OPC-UA Tag	PLC Tag	Unit	PLC Address	Size (bytes)
TI1	TI1R	°C	MD:114	4
TI2	TI2R	°C	MD:118	4
TI3	TI3R	°C	MD:122	4
FI	FIR	$\mathrm{mL\,min^{-1}}$	MD:126	4
P	PR	RPM	MD:130	4
P_DISABLE	P_DISABLE	Boolean	Q:0.4	1

Programming the PLC and HMI

The PLC and HMI can be programmed using the Siemens TIA v14 Basic software on a Windows computer. The license key is loaded from the Siemens USB drive shown in Figure 3. The latest version of the PLC software is also stored on this USB drive in the “Adiabatic CSTR” folder.

(a) License box.

(b) Siemens USB drive.

Figure 3: The Siemens USB drive is in the license box.

The devices are programmed over an ethernet connection which should be established according to steps 2 and 3 as listed in Appendix C. The IP address of the PLC is `192.168.0.10` and the IP address of the HMI is `192.168.0.11`.

2.3 Pump Calibration

The volumetric flow rate through the pump at a given set-point may be calibrated using the bucket-stopwatch method. A linear fit to such data where the intercept is forced through the origin is presented in Figure 4.

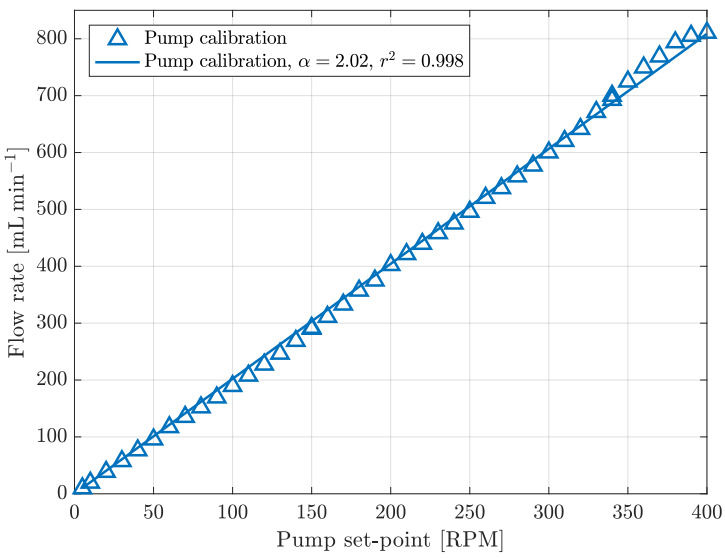

Figure 4: Linear fit of volumetric pump calibration data.

The linear approximation appears reasonable and offers the relationships in Equation (1) between the volumetric flow rate Q in $\mathrm{mL\,min^{-1}}$ and the corresponding set-point S in RPM

$$Q = S\,2.02 \tag{1}$$

Another calibration method is to pulse the pump at a constant flow rate for a precise amount of time and then to measure e.g. the accumulated mass from the pump effluent. The flow rate is then the ratio of accumulated volume to the pulse length. A linear fit to such data where the intercept is forced through the origin is presented in Figure 5. The data is listed in Table 4.

Table 4: Pump calibration data. Confidence intervals represent two standard deviations.

		Mass [g]			
Speed [RPM]	Period [s]	Trial 1	Trial 2	Trial 3	Flow rate [$\mathrm{mL\,min^{-1}}$]
10	120	28.80	28.54	28.59	14.3 ± 0.1
25	60	42.28	42.02	41.75	42.1 ± 0.5
50	60	89.73	89.06	89.33	89.5 ± 0.7
75	60	137.56	137.94	137.25	137.8 ± 0.7
100	60	185.28	185.88	184.26	185.5 ± 2
125	60	226.26	226.49	226.48	226.8 ± 0.3
150	60	271.15	270.63	270.73	271.3 ± 0.6
175	60	323.22	324.34	323.61	324.3 ± 1
200	60	381.23	381.15	382.43	382.3 ± 1
225	60	432.33	431.13	431.98	432.6 ± 1
250	30	238.59	237.57	237.52	476.6 ± 2
275	30	264.46	264.70	263.37	529.3 ± 3
300	30	291.77	292.29	289.81	583.6 ± 5
325	30	317.47	317.69	317.08	636.0 ± 1
350	30	346.95	347.67	348.36	696.6 ± 3
375	30	367.39	369.69	367.76	737.9 ± 5
400	30	392.87	391.52	393.61	786.7 ± 4

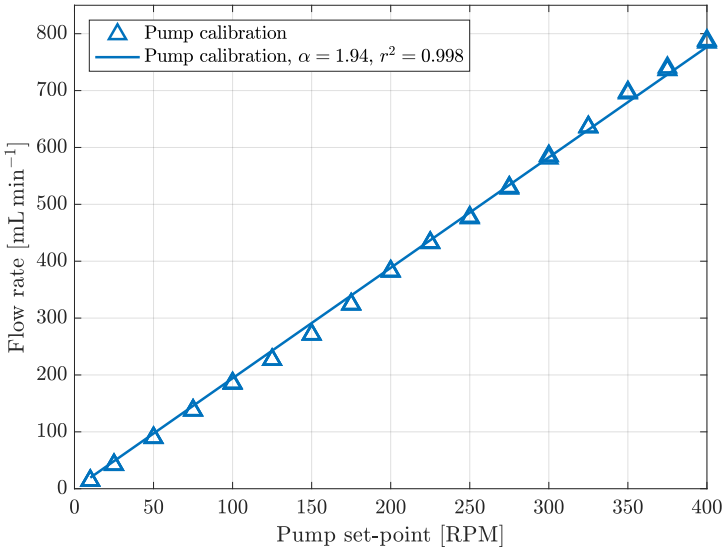

Figure 5: Linear fit of massic pump calibration data.

Again, the linear approximation appears reasonable. The proportionality in Equation (2) is obtained with similar units as for Equation (1).

$$Q = S\,1.94 \tag{2}$$

3 Computer Control

Computer control of the process is possible using the OPC-UA standard. Minimal code examples which show how to connect, read and write variables are presented in the following for both Matlab and Python. Matlab only offers OPC-UA connectivity on Windows whereas Python offers OPC-UA on any platform. An elaborate example of a Python OPC-UA client with live plotting capabilities is listed in Appendix D.4.

3.1 Minimal Code Examples

Matlab 2017a, OPC-UA

```
% Connect to OPC-UA server
ua = opcua('opc.tcp://127.0.0.1:4840/adiabatic_cstr/');
connect(ua);
% The ua.browseNamespace function opens a GUI where the
% namespace may be browsed.
AdiabaticCSTR    = findNodeByName(ua.Namespace,'AdiabaticCSTR');
TI1              = findNodeByName(AdiabaticCSTR,'TI1');
TI2              = findNodeByName(AdiabaticCSTR,'TI2');
TI3              = findNodeByName(AdiabaticCSTR,'TI3');
FI               = findNodeByName(AdiabaticCSTR,'FI');
P                = findNodeByName(AdiabaticCSTR,'P');
P_DISABLE        = findNodeByName(AdiabaticCSTR,'P_DISABLE');
% Read value of TI1
readValue(TI1)
% Write value to P
writeValue(P,0);
% Disconnect
disconnect(ua);
```

Python, OPC-UA

```
from opcua import Client
# Connect to OPC-UA server
ua = Client('opc.tcp://127.0.0.1:4840/adiabatic_cstr/')
ua.connect()
# You may browse the namespace in a
# GUI using the opcua-client software.
objects = ua.get_root_node().get_child('0:Objects')
AdiabaticCSTR = objects.get_child('2:AdiabaticCSTR')
TI1 = AdiabaticCSTR.get_child('2:TI1')
TI2 = AdiabaticCSTR.get_child('2:TI2')
TI3 = AdiabaticCSTR.get_child('2:TI3')
FI = AdiabaticCSTR.get_child('2:FI')
P = AdiabaticCSTR.get_child('2:P')
P_DISABLE = AdiabaticCSTR.get_child('2:P_DISABLE')
# Read value of TI1 [deg C]
print(TI1.get_value())
# Write value to P [RPM]
P.set_value(0)
# Disconnect
ua.disconnect();
```

4 Simulation OPC-UA Server

A simulation OPC-UA server which emulates the actual process is implemented in Python to aid the development of regulators communicating using the OPC-UA standard, the code is listed in Appendix D.3. Mock measurements are generated using a mathematical model of the process. The only discrepancy in comparison with the OPC-UA server offered by the actual process is a “RESET” tag. If the tag is written a value besides “0” then the server will reset to its initial state.

References

[1] S. A. Vejtasa and R. A. Schmitz. An Experimental Study of Steady State Multiplicity and Stability in an Adiabatic Stirred Reactor. *AlChE Journal*, 16 (3):410–419, 1970.

A Experiment Guide: Multiple Steady States

This experiment guide describes the backmix reactor experimental part of Exercise 3 in course 28845 Chemical Reaction Engineering Laboratory.

A.1 Objective

Determine steady states of Equation (3) in an adiabatic stirred tank reactor and reproduce the results by Vejtasa and Schmitz [1] as illustrated in Figure 6.

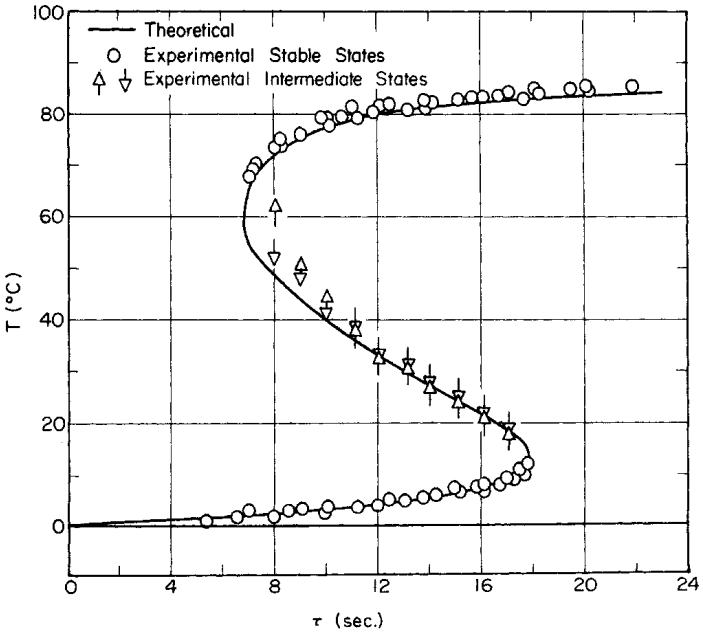

Figure 6: Steady states determined by Vejtasa and Schmitz [1].

A.2 Background

Sodium thiosulfate is oxidized by hydrogen peroxide to form sodium trithionate according to reaction 3.

$$\mathrm{Na_2S_2O_3} + 2\,\mathrm{H_2O_2} \longrightarrow \frac{1}{2}\,\mathrm{Na_2SO_4} + \frac{1}{2}\,\mathrm{Na_2S_3O_6} + 2\,\mathrm{H_2O} \tag{3}$$

The reaction is known to exhibit multiple steady states when it takes place in a adiabatic stirred tank reactor due to the interaction between the temperature dependent reaction rate and the exothermic reaction.[1] Reaction 3 is irreversible and the rate of reaction is given in Equation (4).

$$-r_{\mathrm{Na_2S_2O_3}} = -\frac{1}{2} r_{\mathrm{H_2O_2}} = C_{\mathrm{Na_2S_2O_3}} C_{\mathrm{H_2O_2}}\, A \exp -\frac{B}{T} \tag{4}$$

Reaction parameters are stated in Table 5 where the enthalpy of reaction is on a $Na_2S_2O_3$ basis.

Table 5: Reaction data.

Parameter	Value
A	$\exp(24.6)\,\mathrm{L(s\,mol)^{-1}}$
B	$8500\,\mathrm{K}$
ΔH_R	$-552\mathrm{kJ\,mol^{-1}}$ to $-573\mathrm{kJ\,mol^{-1}}$

A.3 Experiment

Solutions of hydrogen peroxide and sodium thiosulfate have been prepared the day before the experiment is to be conducted and are kept cold in a freezer. The concentrations are approximately $2.4\,\mathrm{M}$ and $1.6\,\mathrm{M}$ respectively and are to be determined precisely by titrimetric analysis.

Check the following before you start the experiment:

1. Check that the solution recipient tank is empty or has enough space left for the entire experiment.
2. Check that there are sufficient amounts of chemicals in the containers in the freezer.
3. Power on equipment.
   (a) Power on the magnetic stirrer.
   (b) Power on the flow meter.
   (c) Power on the peristaltic pump.
   (d) Power on the electrical cabinet.
4. Ensure that the stirrer operates reliably at the highest possible rotational speed.
5. Ensure that the pump is in analog mode by pushing the “mode” button on the pump so that the display reads “ana”.
6. If you wish to record experimental data to a USB Drive:
   (a) Insert a USB drive (FAT formatted) into the USB port on the electrical cabinet.
   (b) Follow the instructions on screen F4 on the HMI.

   (c) Wait 10 seconds, then stop logging.
   (d) Check that data was actually logged to the USB drive.
   (e) Repeat steps (a) and (b).

7. Set the pump speed to the maximum to remove air pockets that may be trapped in the tubes.

8. Await a steady indication of the effluent temperature and note the value.

I: Stable Steady States

A number of runs are made to measure the steady state effluent temperature for different residence times. The objective is to determine steady states outside the region with multiple steady states.

1. Determine stable steady states for long residence time corresponding to low flow rates.

2. Determine stable steady states for short residence time corresponding to large flow rates.

Try to determine precisely the two discontinuities. Note that close to the ignition point the reactor temperature initially changes very slowly prior to ignition. Be sure not to terminate a measurement close to the ignition point before it is quite certain that the temperature has not started a slow rise.

II: Unstable Steady States

The stable branches of the (τ, T)-diagram have now been established. Perform a few measurements in the region with multiple steady states to approach the unstable states by intermittently turning off/increasing the pump speed. This can be done as follows:

1. Choose a relatively small residence time between the extinction-ignition limits.

2. Shortly turn off the pump and observe the temperature rise in the reactor.

3. Turn on the pump again after a slight temperature increase (2 to 4°C) and observe whether the temperature begins to return to the former level or continues to rise to the ignited state.

(a) If the temperature begins to return to the extinguished state, then turn off the pump to give zero flow until the temperature again has increased a few degrees. Then turn on the pump again.

(b) If the temperature begins to decrease the procedure is repeated.

Be sure that the maximum temperature in each successive period with zero flow is a few degrees higher than in the foregoing. In this way it is possible gradually to encircle the position of the unstable steady state temperature at the given residence time. After an ignition, the extinguished state is recovered by "flushing" the reactor with a high flow rate.

4. The unstable steady state should also be determined by making analogous extinction experiments, starting on the "ignited" branch and instead of using periods with zero flow, periods with max flow should be used.

5. If possible, repeat this procedure for a couple of other values of the residence time between the extinction-ignition limits.

You have now recorded pairs of steady state values of the pump speed (P) and the reaction mixture temperature (TI3). These datapoints may be used to construct a (τ, T)-diagram similar to Figure 6.

B Installation of Python for OPC-UA Connectivity

B.1 Windows

1. Download Anaconda 64 bit Python 3.6 at `https://www.continuum.io/downloads`.
2. Install Anaconda. Use default options when prompted. For assistance, see `https://docs.continuum.io/anaconda/install/windows`.
3. Navigate to Start, Anaconda3 (64-bit) and run "Anaconda Prompt".
4. In the prompt, issue the command[1]:

```
conda install python=3.5
```

5. In the prompt, issue the command:

```
conda install -c anaconda cvxopt
```

6. In the prompt, issue the command:

```
pip install freeopcua opcua-client python-snap7
```

7. You have now set up Python. Always call Python code form the "Anaconda Prompt".

B.2 Ubuntu

1. Download Anaconda 64 bit Python 3.6 at `https://www.continuum.io/downloads`.
2. Install Anaconda. Use default options when prompted. For assistance, see `https://docs.continuum.io/anaconda/install/linux`.
3. Open a terminal window.
4. In the terminal window, issue the command:

```
conda install -c anaconda cvxopt
```

5. In the terminal window, issue the command:

```
pip install freeopcua opcua-client python-snap7
```

6. You have now set up Python.

[1]Downgrading to Python 3.5 is required because `cvxopt` (convex optimization solver) does not yet support Python 3.6 on Windows.

B.3 macOS

1. Download Anaconda 64 bit Python 3.6 at `https://www.continuum.io/downloads`.
2. Install Anaconda. Use default options when prompted. For assistance, see `https://docs.continuum.io/anaconda/install/mac-os`.
3. Open a terminal window.
4. In the terminal window, issue the command:

   ```
   conda install -c anaconda cvxopt
   ```

5. In the terminal window, issue the command:

   ```
   pip install freeopcua opcua-client python-snap7
   ```

6. You have now set up Python.

C Installing and Running the OPC-UA Server

1. Complete the steps listed in Appendix B for your operating system.

2. Connect your computer to the experimental setup with ethernet.

3. Configure your ethernet adapter.

   - Windows:

     3.1. Open a cmd window.

     3.2. In the cmd window, issue the command:

     ```
     netsh interface ipv4 show config
     ```

     3.3. Find the name of your ethernet connection in the output of the preceding command. It is typically called “Ethernet”.

     3.4. In the cmd window, issue the following command where NAME is replaced with the name found in the preceding step:

     ```
     netsh interface ipv4 set address name="NAME" static
      192.168.0.5 255.255.255.0
     ```

     3.5. To restore the initial network configuration, issue the command:

     ```
     netsh interface ipv4 set address name="NAME" source
     =dhcp
     ```

   - Ubuntu or macOS:

     3.1. Open a terminal window.

     3.2. In the terminal window, issue the command:

     ```
     ifconfig
     ```

     3.3. Find the name of your ethernet connection in the output of the preceding command. It is typically called “eth0”.

     3.4. In the terminal window, issue the following command where NAME is replaced with the name found in the preceding step:

     ```
     sudo ifconfig NAME 192.168.0.5 netmask 255.255.255.0
     ```

     3.5. To restore the initial network configuration, issue the command:

     ```
     dhclient
     ```

4. Download a release of snap7 from `http://sourceforge.net/projects/snap7/files/`.

5. Unzip the release zip.

6. Install snap7.
   - Windows:
     6.1. Find `snap7.dll` the release and copy it to `C:\Windows\System32\`.
   - Ubuntu:
     6.1. Open a terminal.
     6.2. Navigate to `build/unix` in the release.
     6.3. In the terminal, issue the command:
     ```
     make -f x86_64_linux.mk
     ```
     6.4. In the terminal, issue the command:
     ```
     sudo make -f x86_64_linux.mk install
     ```
   - macOS:
     6.1. Open a terminal.
     6.2. Navigate to `build/osx` in the release.
     6.3. In the terminal, issue the command:
     ```
     make -f x86_64_osx.mk
     ```
     6.4. In the terminal, issue the command:
     ```
     sudo make -f x86_64_osx.mk install
     ```
7. Open a terminal.
   7.1. Windows: Open "Anaconda Prompt".
   7.2. Ubuntu or macOS: Open a terminal.
8. Navigate to the folder where you have saved the code listed in Appendix D.1.
9. In the terminal window, issue the command:
   ```
   python s7_to_opcua.py
   ```
10. The OPC-UA server is now running and you may connect to it on `opc.tcp://127.0.0.1:4840/adiabatic_cstr/`.
    Note: When the OPC-UA server is running the HMI should *not* be used.
11. To stop the OPC-UA server, issue CTRL-C.

C.1 Running the Sample Code

Install Python as described in Appendix B. Save the code listed in the Appendix D. Firstly the simulation server is started and then a client may be started.

To start the simulation server issue

```
python simulation_server.py
```

When the server is done starting up it will display “Server reset” to indicate that it has reset to the specified initial steady state and that it is ready for a client to connect. The Python client example (Appendix D.4) may be run by issuing

```
python client_template.py
```

A live plot will appear showing measurements as they are recorded from the OPC simulation server.

D Sample Code

For comments on the code listed in the following, the reader is referred to the comments given in the code.

D.1 s7_to_opcua.py

```python
# Name: s7_to_opcua.py
# Author: Eskild Schroll-Fleischer <esksch@dtu.dk>
# Date: 12th of September 2017
#
# Description:
# OPC-UA server exposing PLC endpoints. Data exchange with PLC
# using S7 protocol. Variables are read periodically from the
# PLC and published on the OPC-UA server.
# The writable OPC-UA tags are monitored for changes. When a change is
# caught then the new value is published to the PLC.
#
# The code is organized as follows:
# 1. Configuration
# 2. Connect to PLC with S7
# 3. Populate OPC-UA address space
# 4. Subscribe to datachanges coming from OPC-UA clients
# 5. Read all readables simultaneously from the PLC and update the OPC-UA variables

# L 609 in address_space.py, python-opcua v 0.90.3

import time
from opcua import ua, Server

import snap7
from snap7.snap7types import S7AreaMK, S7AreaPA, S7WLWord

## 1. Configuration
OPC_UA_SERVER = 'opc.tcp://127.0.0.1:4840/adiabatic_cstr/'
# Certificates may be generated on unix platforms by issuing:
# openssl req -x509 -newkey rsa:2048 -keyout private_key.pem -out certificate.pem -days 355 -nodes
# openssl x509 -outform der -in certificate.pem -out certificate.der
OPC_UA_CERTIFICATE = 'certificate.der'
OPC_UA_PRIVATE_KEY = 'private_key.pem'
OPC_UA_URI = 'http://dtu.dk'
SAMPLE_TIME = 0.1 # [s]
SNAP7_CLIENT = ('192.168.0.10', 0, 1,)

def read(c):
  data = c.read_area(snap7.snap7types.S7AreaMK, 0, 114, S7WLWord*5)
  TI1 = snap7.util.get_real(data,S7WLWord*(1-1)) # [deg C]
  TI2 = snap7.util.get_real(data,S7WLWord*(2-1)) # [deg C]
  TI3 = snap7.util.get_real(data,S7WLWord*(3-1)) # [deg C]
  FI = snap7.util.get_real(data,S7WLWord*(4-1)) # [mL/min]
  P = snap7.util.get_real(data,S7WLWord*(5-1)) # [RPM]
  #PULSE_DURATION = snap7.util.get_dword(data,S7WLWord*(6-1)) # [ms]
  P_DISABLE = snap7.util.get_bool(c.read_area(S7AreaPA, 0, 0, 1), 0, 4)
  return (TI1, TI2, TI3, FI, P, P_DISABLE,)

def write_p(c, RPM):
  data = bytearray(16)
  snap7.util.set_real(data, 0, RPM)
  c.write_area(S7AreaMK, 0, 130, data)

def pump_pulse(c):
  # The PULSE bit resides on M142.1.
  on = bytearray(1)
  snap7.util.set_bool(on, 0, 1, True)
  c.write_area(S7AreaMK, 0, 142, on)

def write_p_disable(c,b):
  d = bytearray(1)
  if b:
    snap7.util.set_bool(d, 0, 4, True)
  c.write_area(S7AreaPA, 0, 0, d)

class SubscriptionHandler(object):
  def __init__(self,n):
    self.i = 0
    self.n = n
  def final_datachange_notification(self, node, val, data):
    node = node.get_path_as_string()[-1].split(':')[-1]
    # 'path_as_string' is a list of strings containing:
    # 0: 0:Root
    # 1: 1:Objects
    # 2: 2:OPC DA Server
```

```
    # 3 and onwards: 3:[Step of path to node in OPC-DA]
    snap7client_ = snap7.client.Client()
    snap7client_.connect(*SNAP7_CLIENT)
    if node == 'P':
      write_p(snap7client_, val)
    if node == 'P_DISABLE':
      write_p_disable(snap7client_, val)
    snap7client_.disconnect()
  # This function is called initially to catch the notifications from newly added nodes
  def datachange_notification(self, node, val, data):
    self.i = self.i + 1
    #print('Catching meaningless datachange notification')
    if self.i == self.n:
      #print('Finished catching meaningless datachange notifications')
      self.datachange_notification = self.final_datachange_notification

## 2. Connect to PLC with S7
snap7client = snap7.client.Client()
snap7client.connect(*SNAP7_CLIENT)

server = Server()
server.set_endpoint(OPC_UA_SERVER)
server.load_certificate(OPC_UA_CERTIFICATE)
server.load_private_key(OPC_UA_PRIVATE_KEY)
idx = server.register_namespace(OPC_UA_URI)
objects = server.get_objects_node()

# 3. Populate OPC-UA address space
TI1, TI2, TI3, FI, P, P_DISABLE = read(snap7client)
acstr = objects.add_object(idx, 'AdiabaticCSTR')
TI1 = acstr.add_variable(idx, 'TI1', ua.Variant(TI1, ua.VariantType.Double))
TI2 = acstr.add_variable(idx, 'TI2', ua.Variant(TI2, ua.VariantType.Double))
TI3 = acstr.add_variable(idx, 'TI3', ua.Variant(TI3, ua.VariantType.Double))
FI = acstr.add_variable(idx, 'FI', ua.Variant(FI, ua.VariantType.Double))
P = acstr.add_variable(idx, 'P', ua.Variant(P, ua.VariantType.Double))
P_DISABLE = acstr.add_variable(idx, 'P_DISABLE', ua.Variant(P_DISABLE, ua.VariantType.Boolean))
P.set_writable()
P_DISABLE.set_writable()

try:
  server.start()
  ## 4. Subscribe to datachanges coming from OPC-UA clients
  handler = SubscriptionHandler(2) # Two writable variables
  sub = server.create_subscription(100, handler).subscribe_data_change([P,P_DISABLE])
  while True:
    time.sleep(SAMPLE_TIME)
    ## 5. Read all readables simultaneously from the PLC and update the OPC-UA variables
    TI1_, TI2_, TI3_, FI_, P_, P_DISABLE_ = read(snap7client)
    [node.set_value(value) for node, value in zip([TI1,TI2,TI3,FI], [TI1_, TI2_, TI3_, FI_])]
finally:
  snap7client.disconnect()
  server.stop()
```

D.2 datalog_to_matlab.py

```
# Name: datalog_to_matlab.py
# Author: Eskild Schroll-Fleischer <esksch@dtu.dk>
# Date: 12th of September 2017
#
# Description:
# Converts text file format of HMI device to Matlab file format
# which is convenient for data analysis and plotting.
# This file should be placed in the same directory as the input data file.
# The output data file may be loaded in Matlab and used to plot the data:
# %% Load data
# load(OUTPUT_MAT, 'data');
# %% Store data in named vectors
# t = data(:,1); % Time relative to first collected data [s]
# TI1 = data(:,2); % Temperature [deg C]
# TI2 = data(:,3); % Temperature [deg C]
# TI3 = data(:,4); % Temperature [deg C]
# FI = data(:,5); % Flow rate [mL/min]
# PUMP_DISABLE = data(:,7);
# PUMP_ENABLE = ~PUMP_DISABLE;
# P = data(:,6) .* PUMP_ENABLE; % Pump speed, respects PUMP_DISABLE setting [RPM]
# %% Plot of temperature and pump speed
# figure(1);
# subplot(2,1,1);
# plot(t, [TI1 TI2 TI3]);
# ylabel('Temperature [deg C]');
# subplot(2,1,2);
# plot(t, P)
# xlabel('Time [s]'); ylabel('Pump [RPM]');

import csv, datetime, codecs
import numpy as np
import scipy.io as io

INPUT = 'Data log0.txt' # Change this
OUTPUT_MAT = 'data.mat'

INPUT_DATETIME_FORMAT = '%Y-%m-%d %H:%M:%S'

def string_to_datetime(s):
  return datetime.datetime.strptime(s, INPUT_DATETIME_FORMAT)

class Datapoint():
  def __init__(self):
    self.TI1 = None;self.TI2 = None;self.TI3 = None;self.FI = None;self.P = None;self.P_DISABLE = None

# Open file for reading
with codecs.open(INPUT, 'rb', 'utf-16') as f:
  # 'data' is a buffer for data read from the CSV
  data = {}
  # CSV file is tab-delimited and values are enclosed in quotation marks
  rows = csv.reader(f, delimiter='\t', quotechar='"')
  # Loop over rows in the CSV File
  for row in rows:
    # This try-except will except if the row contains no timestamp
    try:
      t = str(int(string_to_datetime(row[1]).timestamp()))
      # Key is either TI1, TI2, TI3, FI, P
      key = row[0]
      # Value is a float but is read as a string by the CSV reader
      value = float(row[2])
      # The the 'value' of 'key'. If the object does not already exist, create it.
      try:
        setattr(data[t], key, value)
      except:
        data[t] = Datapoint()
        setattr(data[t], key, value)
    except:
      pass

  # Save data from buffer 'data' to a .mat file
  matrix = np.zeros((len(data.keys()), 7))
  t0 = None
  i = 0
  for timestamp, obj in sorted(data.items()):
    if t0 is None:
```

```
    t0 = int(timestamp)
  matrix[i,:] = [int(timestamp)-t0, obj.TI1, obj.TI2, obj.TI3, obj.FI, obj.P, obj.P_DISABLE]
  i = i + 1
# Remove rows containing 'nan'
matrix = matrix[~np.isnan(matrix).any(axis=1)]

# Save 'matrix' to .mat file.
io.savemat(OUTPUT_MAT, {'data':matrix})
```

D.3 simulation_server.py

```python
# Name: simulation_server.py
# Author: Eskild Schroll-Fleischer <esksch@dtu.dk>
# Date: 12th of September 2017
#
# Description:
# Simulation server which emulates the adiabatic CSTR in B229 using a process model
# to generate mock measurements. The server communicates according to the OPC-UA standard.
# The state may be reset by writing anything but 0 to the RESET tag.
# The server may be stopped by issuing CTRL-C.
#
# The code is organized as follows:
# 1. Configuration
# 2. First-principles model of the adiabatic CSTR
# 3. Populate OPC-UA address space
# 4. (a) If the RESET tag value is different from 0 then the server is reset to the initial state
# 4. (b) Check whether sample time has passed and if so, execute process functionality
# 4. (e) Simulate process model one sample time
# 4. (f) Publish results of simulation to OPC-UA server

# Import standard python packages
import time
from opcua import ua, Server
import numpy as np
from scipy.integrate import odeint

## 2. Configuration
OPC_UA_SERVER = 'opc.tcp://127.0.0.1:4840/adiabatic_cstr/'
# Certificates may be generated on unix platforms by issuing:
# openssl req -x509 -newkey rsa:2048 -keyout private_key.pem -out certificate.pem -days 355 -nodes
# openssl x509 -outform der -in certificate.pem -out certificate.ders
OPC_UA_CERTIFICATE = 'certificate.der'
OPC_UA_PRIVATE_KEY = 'private_key.pem'
OPC_UA_URI = 'http://dtu.dk'
t_step = 0.2 # [s]
Q = 0.01*np.eye(ny) # Measurement noise dispersion matrix
PUMP_CALIBRATION = 2.02 # [(mL/min)/RPM]

# Dimensions of variables
nx = 3 # TC3, Ca, Cb
ny = 1 # TC3
nu = 1 # P
nz = 1 # TC3
nd = 2 # TC1, TC2

## 2. First-principles model of the adiabatic CSTR
class AdiabaticStirredTankReactor:
  def __init__(self,x0=None):
    '''Set initial conditions and plant parameters.'''
    self.t = 0
    # Model parameters
    self.Cin = [0.9320625, 1.28125] # [mol/L]
    self.HR = -553000 # [J/mol]
    self.v = [-1, -2] # Molar stoichiometry
    self.kA = 24.6 # Corresponding to R in units [mol/L]
    self.kB = 8500 # [K]
    self.V = 0.105 # [L]
    self.cp = 4186.3 # [J/(kg*K)]
    self.rho = 1.0 # [kg/L]
    # Initial state
    if x0 is None:
      self.x = np.concatenate(([273.15-1.5],self.Cin))
    else:
      self.x = x0
  def ode(self, x, t, u, d):
    try:
      q = u[0]
    except:
      q = u
    Tin = d[0]
    T = x[0]
    C = x[1:]
    R = np.exp(self.kA -self.kB/T) *np.prod(C)
    dTdt = (q/self.V) *(Tin -T) + R*(-self.HR)/(self.rho*self.cp)
    dCdt = (q/self.V) *(self.Cin -C) + np.multiply(self.v,R)
    return np.concatenate(([dTdt], dCdt))
```

```
  def y(self,x):
    return x[0]
  def step(self, dt, u, d):
    sol = odeint(self.ode, self.x, [0, dt], args=(u,d,))
    self.x = sol[1] # Save final solution as current state
    self.t += dt
    return sol[1]
ACSTR = AdiabaticStirredTankReactor()
x0 = ACSTR.x

server = Server()
server.set_endpoint(OPC_UA_SERVER)
server.load_certificate(OPC_UA_CERTIFICATE)
server.load_private_key(OPC_UA_PRIVATE_KEY)
idx = server.register_namespace(OPC_UA_URI)
objects = server.get_objects_node()

## 3. Populate address space
acstr = objects.add_object(idx, 'AdiabaticCSTR')
reset_tag = acstr.add_variable(idx, 'RESET', ua.Variant(1, ua.VariantType.UInt16))
reset_tag.set_writable()
TI1 = acstr.add_variable(idx, 'TI1', ua.Variant(0, ua.VariantType.Double)) # [deg C]
TI2 = acstr.add_variable(idx, 'TI2', ua.Variant(0, ua.VariantType.Double)) # [deg C]
TI3 = acstr.add_variable(idx, 'TI3', ua.Variant(0, ua.VariantType.Double)) # [deg C]
FI = acstr.add_variable(idx, 'FI', ua.Variant(0, ua.VariantType.Double)) # [mL/min]
P = acstr.add_variable(idx, 'P', ua.Variant(0, ua.VariantType.Double)) # [RPM]
P_DISABLE = acstr.add_variable(idx, 'P_DISABLE', ua.Variant(0, ua.VariantType.Double)) # [RPM]
P.set_writable()
server.start()

try:
  t0 = time.time()
  while True:
    ## 4. (a) If the RESET tag value is different from 0 then the server is reset to the initial state
    if reset_tag.get_value() != 0:
      # Reset server
      ACSTR.x = x0;
      P.set_value(0)
      TI1.set_value(0)
      TI2.set_value(0)
      reset_tag.set_value(0)
      print('Server reset')
    time.sleep(0.1) # Update speed of the real system
    ## 4. (b) Check whether sample time has passed
    if time.time() -t0 >= t_step:
      t0_ = t0
      t0 = time.time()
      # Generate measurement noise
      v = np.random.multivariate_normal(np.zeros(ny),Q)
      ## 4. (e) Simulate process model one sample time
      P_ENABLE = 1
      if P_DISABLE.get_value() is 1:
        P_ENABLE = 0
      T = ACSTR.y(ACSTR.step(t0-t0_, [P.get_value()*PUMP_CALIBRATION*P_ENABLE], [(TI1.get_value()+TI2.get_value()+273.15*2)/2])) +
            v -273.15
      ## 4. (f) Publish results of simulation to OPC-UA server
      TI3.set_value(T[0])
finally:
  server.stop()
```

D.4 client_template.py

```python
# Name: client_template.py
# Author: Eskild Schroll-Fleischer <esksch@dtu.dk>
# Date: 12th of September 2017
#
# Description:
# MPC regulator for the adiabatic CSTR in B229 at the Technical University of Denmark.
# Communicates with the process equipment using OPC-UA.
# Data aquisition, Kalman filter and MPC are executed in a background thread at regular
# intervals. The controller set point may be changed during operation using the r(x)
# function in the embedded prompt. A live plot may be started using the
# live_plot(data_queue) function, it may be closed by CTRL-C.
#
# The code is organized as follows:
# 1. Configuration
# 2. Prepare Kalman filter and MPC here
# 3. Connect to OPC-UA server and discover nodes
# 4. Open CSV file for logging
# 5. Establish time-zero and read current values
# 6. (a) Poll server for new measurements
# 6. (b) Read measurements, inputs and known disturbances
# 6. (c) Filtering and MPC execution here
# 6. (d) Update data for animation plot
# 7. Plot

# Import standard python packages
import sys, time, datetime, csv, queue, atexit, threading
from opcua import Client
import numpy as np
from numpy.matlib import repmat
from scipy.optimize import fsolve
import matplotlib.pyplot as plt
# Use qt5 backend for more realiable plotting with matplotlib
import matplotlib.pyplot as p
p.switch_backend('Qt5Agg')

try:
    from IPython import embed
except ImportError:
    import code
    def embed():
        vars = globals()
        vars.update(locals())
        shell = code.InteractiveConsole(vars)
        shell.interact()

## 1. Configuration
OPC_UA_SERVER = 'opc.tcp://localhost:4840/adiabatic_cstr/'
LOG_FILE = 'log.csv'
# Length of discrete time step [s]
t_step = datetime.timedelta(seconds=1)
# Number of discrete time steps to keep in history
n_hist = 50
# Number of discrete time steps to forecast
n_horizon = 10


# Dimensions of variables
ny = 1
nu = 1
nz = 1
nd = 2

##
## 2. Prepare Kalman filter and MPC here
##

# Set these values!
ys = np.array([0])
us = np.array([0])
ds = np.array([0,0])

# Default to keeping current steady state
r_future = np.zeros((1,nz))

def regulator(data_queue):
```

```
global r_future
# Get reference to current thread instance
this = threading.currentThread()

# Preallocate measurement and estimate history matrices to be used in a ring-buffer scheme
r = np.zeros((n_hist+n_horizon,nz))
y_hist = np.empty((n_hist,ny))
y_est = np.empty((n_hist,ny))
y_pred = np.empty((n_horizon,ny))
u_hist = np.empty((n_hist,nu))
u_pred = np.empty((n_horizon,nu))
for array in [y_hist, y_est, y_pred, u_hist, u_pred]:
  array[:] = np.NAN

# 3. Connect to OPC-UA server and discover nodes
client = Client(OPC_UA_SERVER)
# Connect and discover nodes
client.connect()
root = client.get_root_node()
AdiabaticCSTR = root.get_child('0:Objects').get_child('2:AdiabaticCSTR')
TI1 = AdiabaticCSTR.get_child('2:TI1')
TI2 = AdiabaticCSTR.get_child('2:TI2')
TI3 = AdiabaticCSTR.get_child('2:TI3')
FI = AdiabaticCSTR.get_child('2:FI')
P = AdiabaticCSTR.get_child('2:P')
P_DISABLE = AdiabaticCSTR.get_child('2:P_DISABLE')

# 4. Open CSV file for logging
logfile = open(LOG_FILE, 'a')
csvlog = csv.writer(logfile, delimiter=';', quoting=csv.QUOTE_MINIMAL)

try:
  # 5. Establish time-zero and read current values. The process is assumed to be in
  # steady state.
  t0 = TI3.get_data_value().ServerTimestamp
  y0 = TI3.get_value()
  modifier = 1
  if P_DISABLE.get_value():
    modifier = 0
  u0 = P.get_value()*modifier
  t_start = t0
  while getattr(this, 'do_run', True):
    # 6. (a) Poll server for new measurements and act when sufficient time has passed
    time.sleep(0.1)
    t = TI3.get_data_value().ServerTimestamp
    if t -t0 >= t_step:
      t0 = t
      # 6. (b) Read measurements, inputs and known disturbances as well as extra
      # data not directly used by the regulator. Data is logged continuously.
      y = TI3.get_value()
      modifier = 1
      if P_DISABLE.get_value():
        modifier = 0
      u = P.get_value()*modifier
      d = [TI1.get_value(), TI2.get_value()]
      # Log data to disk
      csvlog.writerow([(t0-t_start).total_seconds()]+[y]+list(r[0,])+[u]+d)

      # Dimensional variables from deviation variables
      y = ys + (np.array(y)-y0)
      u = us + (np.array(u)-u0)

      ##
      ## 6. (c) Filtering and MPC execution here
      ##

      # 6. (d) Update data for animation plot
      # Roll history and trajectory
      y_hist = np.roll(y_hist,-ny)
      u_hist = np.roll(u_hist,-nu)
      r = np.roll(r,-nz)
      y_hist[-1,] = y
      u_hist[-1,] = u
      r[-1,] = r_future

      # Submit new data to queue for live_plot to consume
      data_queue.put((r, y_hist, y_est, u_hist, y_pred, u_pred))
finally:
```

```
    client.disconnect()
    logfile.close()

## 7. Plot
def live_plot(data_queue):
  # Empty the queue of its contents
  while True:
    try:
      data_queue.get(block=False)
    except queue.Empty:
      break
  # Get data from queue
  r, y_hist, y_est, u_hist, y_pred, u_pred = data_queue.get()
  # Prepare time axis which is constant at all times
  t_hist = np.linspace(-(n_hist-1),0,n_hist) *t_step.total_seconds()
  t_hist_pred = np.linspace(-(n_hist-1),n_horizon,n_hist+n_horizon) *t_step.total_seconds()
  # Open plot window and clear it.
  f = plt.figure(1)
  f.clf()
  plt.ion()
  # Upper subplot
  plt.subplot(2,1,1)
  # Plot measurements
  p1 = plt.plot(t_hist, y_hist, 'o', ms=4, mfc='none')
  # Reset color order
  plt.gca().set_prop_cycle(None)
  # Plot filtered measurements
  p2 = plt.plot(t_hist_pred, np.concatenate((y_est,y_pred)))
  # Reset color order
  plt.gca().set_prop_cycle(None)
  # Plot set point
  p3 = plt.plot(t_hist_pred, r, '--')
  # Axis specification
  plt.ylim([-10,100])
  plt.xlim([-(n_hist-1)*t_step.total_seconds(), n_horizon*t_step.total_seconds()])
  plt.legend(['TI3'])
  plt.ylabel('Temperature $[\mathrm{^{\circ}C}]$')
  # Lower subplot
  plt.subplot(2,1,2)
  #plt.cla() ###
  # Plot manipulated variable as stairs
  p4 = plt.plot(t_hist_pred, np.concatenate((u_hist,u_pred)), drawstyle='steps-pre')
  # Axis specification
  plt.ylim([0,400])
  plt.xlim([-(n_hist-1)*t_step.total_seconds(), n_horizon*t_step.total_seconds()])
  plt.legend(['$P$'],loc='lower left')
  plt.ylabel('Pump $[\mathrm{RPM}]$')
  plt.xlabel('Time $[\mathrm{s}]$')
  # Display plot
  plt.show()
  # Live update plot until keyboard interrupt (CTRL-C) is issued.
  try:
    while True:
      plt.pause(0.1)
      # Get latest data
      try:
        r, y_hist, y_est, u_hist, y_pred, u_pred = data_queue.get(True, 0.1)
      except queue.Empty:
        continue
      # Update the plots
      for i, p in enumerate(p1):
        p.set_ydata(y_hist[:,i])
      y_ = np.concatenate((y_est,y_pred))
      for i, p in enumerate(p2):
        p.set_ydata(y_[:,i])
      for i, p in enumerate(p3):
        p.set_ydata(r[:,i])
      y_ = np.concatenate((u_hist,u_pred))
      for i, p in enumerate(p4):
        p.set_ydata(y_[:,i])
  except KeyboardInterrupt:
    plt.close(1)

# Use this function to manipulated set-point from cmd window
def r(x):
  global r_future
  r_future = r_future + x

```

```
def end_thread(thread):
  thread.do_run = False
  if thread.is_alive():
    thread.join()

if __name__ == '__main__':
  data_queue = queue.Queue()
  thread = threading.Thread(target=regulator,args=(data_queue,),daemon=True)
  thread.start()
  atexit.register(end_thread, thread)
  live_plot(data_queue)
  embed()
```

E Datasheets

E.1 Watson Marlow 323u

WATSON MARLOW Bredel PUMPS

Engineering and Technical Data

323U/ D and 323U/ 4D

Metering and Transfer Pump
Auto/ Manual Control
IP31 Wipedown Enclosure

Technical Information and Features

- *Flow rates from 0.09 to 2000 mL/min (0.001-31.7 gph)*
- *Operator friendly keypad offering:*
  - *Start, stop, speed control, fwd/rev, control mode*
  - *Precise manual speed control from 3-400 rpm in 1 rpm increments*
  - *Large clear LCD display with accurate digital monitoring for clear RPM indication*
  - *"Auto-restart" and "keypad lock" functions*
  - *Memo Dose feature allows manually actuated repetitive discrete volume dispensing*
- *133:1 speed control range*
- *Remote speed control via 0-10VDC or 4-20mA analog speed input when in Analog mode*
- *Remote start/stop capability via dry contact closure or TTL switching*
- *Remote direction control capability via dry contact closure or TTL switching*
- *Tough metal and ABS case with broad chemical resistance and IP31 wipedown enclosure*
- *Brushless DC motor for excellent speed control, quiet operation, and no maintenance*
- *Fitted easy loading flip-top three roller 313D or four roller 314D pumpheads*
- *Optional three roller 313X and four roller 314X extension pumpheads for up to 6 channels of flow*
- *313D and 314D and extension heads accept tube sizes # 112, 13, 14, 16, 25, 17, and 18 (0.5-8.0 mm bore & 1.6 mm wall)*
- *313D2 and 314D2 accept thick wall tube sizes # 105, 108, 119, 120, 15, 24 (0.5-6.4 mm bore & 2.4 mm thick wall)*
- *May be fitted with optional four roller 314MC or eight roller 318MC five-channel microcassette pumpheads – stackable for up to ten channels of flow with manifold tubing*

Flow Rate Ranges (ml/ min*)

1.6 mm Wall Tube #	**112**	**13**	**14**	**16**	**25**	**17**	**18**
2.4 mm Wall Tube #	**105**	**108**	**119**	**120**	**15**	**24**	**N/ A**
Tube Bore	0.5mm 1/50"	0.8mm 1/32"	1.6mm 1/16"	3.2mm 1/8"	4.8mm 3/16"	6.4mm 1/4"	8.0mm 5/16"
313 Pumphead (3 Roller)	0.09-12	0.21-28	0.81-110	3.0-400	6.6-880	11-1440	15-2000
314 Pumphead (4 Roller)	0.09-12	0.18-24	0.75-100	2.6-340	5.7-760	9.0-1200	12-1600

Maximum Number of Channels with 1.6mm Wall Tubing with 313 or 314 Extension Pumpheads, up to 30 psi

Tube Bore	**0.5mm**	**0.8mm**	**1.6mm**	**3.2mm**	**4.8mm**	**6.4mm**	**8.0mm**
Silicone	6	6	5	3	2	1	1
Other Materials	6	6	4	2	2	1	1

* 1 gal = 3785.4 ml

WATSON MARLOW Bredel PUMPS

Engineering and Technical Data

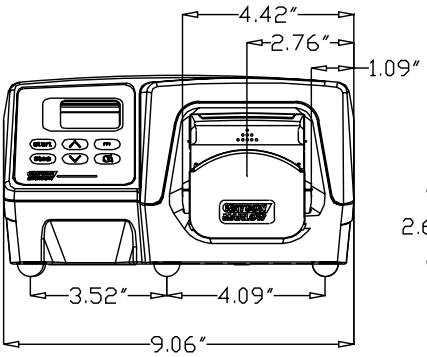

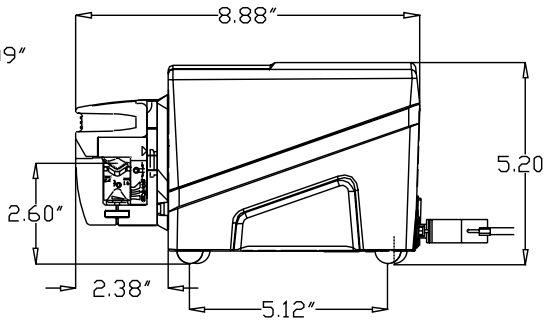

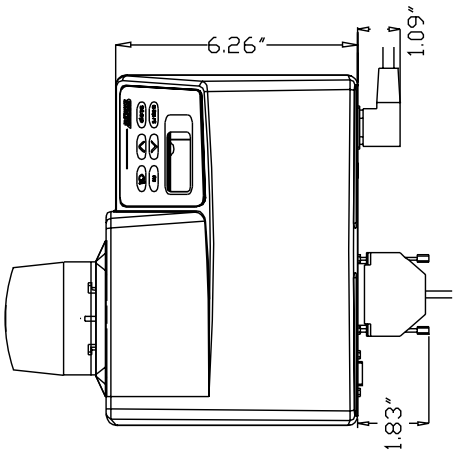

323U/ D and 323U/ 4D

Metering and Transfer Pump

Auto/ Manual Control - IP31 Wipedown Enclosure

Specifications

Shipping Weight: 9.9lbs

Maximum Power Consumption: 100VA

Supply: 100-120/220-240V 50-60Hz (voltage selectable)

Maximum Rotor Speeds: 400 rpm

Enclosure: IP31 wipedown

Operational Temperature Range: 4°C to 40°C (40°F to 104°F)

Control Range: 133:1

Noise: <70dBA at 1 meter

Standards: Equipment complies with all applicable CE directives

Product Codes

323U Drive, 400 rpm	036.3144.00A
313D 3 roller pumphead for 1.6 mm wall	033.3411.000
313X 3 roller extension pumphead for 1.6 mm wall	033.3431.000
314D 4 roller pumphead for 1.6 mm wall	033.4411.000
314X 4 roller extension pumphead for 1.6 mm wall	033.4431.000
313D2 3 roller pumphead for 2.4 mm wall	033.3511.000
314D2 4 roller pumphead for 2.4 mm wall	033.4511.000
Complete 323U/D	030.3144.3DA
Complete 323U/D2	030.3144.32A

Materials of Construction

Pumphead

Pump Track & Lever: IXEF

Rollers: Nylatron

Spindles: Electroless nickel plated hardened steel

Bearings: Bronze bush

Drive

Drive Base: Powder coated aluminum casting

Drive Top: ABS Plastic

Bayonet Mounting Plate: IXEF

Available Tubing Materials

1.6 mm wall for 313D & 314D	2.4 mm wall for 313D2 & 314D2
Bioprene®	Bioprene® (excl. 0.5&0.8mm)
Marprene®	Marprene® (excl. 0.5&0.8mm)
Silicone	Silicone
Neoprene (excl. 0.5 mm)	Sta-Pure™ (excl. 0.5&0.8mm)
Butyl (excl. 0.5&0.8mm)	Chem-Sure™ (excl. 0.5&0.8mm)
Tygon® (excl. 0.5&0.8)	
Fluorel™ (excl. 0.5&0.8mm)	
Sta-Pure™ (excl. 0.5&0.8mm)	
Chem-Sure™ (excl. 0.5&0.8mm)	

Watson-Marlow Bredel Pumps
37 UPTON TECHNOLOGY PARK, WILMINGTON, MA 01887-1018
TEL: 978-658-6168 / FAX: 978-658-0041
www.watson-marlow.com
support@wmbpumps.com

E.2 ISOIL MS 501, ML210

Isoil Industria a worldwide supplier of electromagnetic flowmeters

Total flow control. Accurate to the drop.

ISOMAG®

The friendly magmeter

THE IDEAL FLOWMETERS FOR ANY APPLICATION

- from DN03 to DN2400
- wide range of process connections
- battery powered system
- GPRS wireless communication

CONVERTERS	ML4F1	ML 51	ML 110
			
Description	Fast Sampling Rate Converter (up to 400Hz)	4/20 mA Loop Powered Converter	Digital Converter
Enclosure	Stainless Steel AISI 304 (opt. AISI 316)	Nylon with Glass Fiber Opt. Aluminium Die Casting	Nylon with Glass Fiber Opt. Aluminium Die Casting (pictured)
Display	No	2 lines x 16 characters	2 lines x 16 characters
Protection Rate	IP 67	IP 65 / IP 67	IP 65 / IP 67
Outputs / Inputs	1 digital output max 1250Hz Profibus / RS485 (opt.) 1 current output, passive (opt.) 5 digital input/output	1 digital output + 1 digital input + 4/20 mA two wire system	1 current output 2 digital output max 1250Hz Others on request (see additional modules)
Special Functions	Bidirectional, Dual Range, Diagnostic, Empty Pipe, Batch	Bidirectional, Diagnostic, Empty Pipe	Bidirectional, Dual Range, Diagnostic, Empty Pipe
Power Supply	10-33 Vdc	10-33 Vdc two wire	90-265Vac / 45-60Hz 10-63Vdc 15-45Vac / 45-66Hz
Accuracy class	± 0,2% of measured value	± 0,5% of measured value	± 0,8% (± 0,4% on request) of measured value
Repeatability	Better then 0.1%	± 0,5%	± 0,2%
Temperature	–20…+60°C	–20…+70°C	–10…+50°C

SENSORS	MS 501 - MS 600	MS 1000	MS 5000
			
Description	"Microflow" Sensor	"Wafer" Sensor	Patented Wrapper Plastic Sensor
Body Material	Stainless Steel AISI304 (MS 501); Polypropylene (MS 600)	Carbon Steel Stainless Steel AISI304 (316 on request)	Polyurethane
Diameter (mm)	DN 3 ÷ 20	DN 25 ÷ 400	DN 20 ÷ 80
Pressure (bar)	PN 16, PN 40 on request	PN 16, PN 40 for PTFE	PN 6
Temperature	–20 ÷ 100 °C (PTFE/compact) –20 ÷ 130 °C (PTFE/remote) 0 ÷ 60 °C (Polypropylene liner)	0 ÷ 60 °C (Polypropylene liner) –5 ÷ 80 °C (Ebonite liner) –20 ÷ 100 °C (PTFE/compact) –20 ÷ 110 °C (PTFE/remote)	0 ÷ 50 °C
Connection	Threaded; Flanged; Sanitary DIN11851; Tri-clamp; Tri-clover, SMS…	Wafer	Metallic wrapper
Liner	PTFE, Polypropylene	Polypropylene, Ebonite, PTFE, others on request	Polyurethane
Electrodes	Stainless Steel AISI316L; Hastelloy C; Platinum, Tantalum, Titanium, etc…		
Protection Rate	IP68 for all sensors in separate version, for compact sensors depending on protection rate of converter connected		
Accuracy class	Depending on converter		± 2% of measured value

- high speed converter
- HP version up to 250 bar
- energy meter
- 3A sanitary approval
- MID-MI004 (EN1434) approval
- MID-MI001 & OIML R49 approvals

	ML 210 – ML 211	ML 145 – ML 252	ML 255
			
	Graphic Converter Energy Meter (ML 211)	Battery Powered Converter	Battery Powered Converter
	Aluminium Die Casting Stainless Steel on request	Aluminium Die Casting Stainless Steel on request	Aluminium Die Casting Stainless Steel on request
	Graphic display 128x64 pixels, 8 lines x 16 characters, with back light	2 lines x 16 characters Blind version (ML 252)	Graphic display 128x64 pixels, 8 lines x 16 characters
	IP 67	IP 67 / IP 68	IP 67 / IP 68
	1 current output (+ 1 opt.) 2 digital output max 1250Hz (opt. at 12,5KHz); 1 digital input Others on request (see additional modules)	2 digital output + 1 digital input (opt.) 1 current output (with external power supply only ML 145)	2 digital output + 1 digital input (opt.) Others on request (see additional modules)
	Bidirectional, Dual Range, Diagnostic, Empty Pipe, Batch	Bidirectional, Diagnostic, Energy Saving, Empty Pipe, Data Logger	Bidirectional, Diagnostic, Energy Saving, Empty Pipe, Data Logger, GPRS, BIV (Built In Verificator), DAT card
	90-265Vac / 45-60Hz 10-63Vdc 15-45Vac / 45-66Hz 10-35Vdc	Lithium Battery (up to 6 batteries) + DC or solar panel (ML 145) 2 lithium battery (ML 252)	Lithium Battery (up to 6 batteries) + AC/DC or solar panel
	± 0,2% of measured value	± 0,5% of measured value*	± 0,4% of measured value*
	Better then 0.1%	Better then 0.4%	± 0,4%
	–20…+60°C	–20…+60°C	–20…+60°C

	MS 2410	MS 2500	MS 3770 - MS 3810
			
	"Sanitary" Sensor for Food/Pharmaceutical Applications	"Flanged" Sensor	"Insertion" Sensor with or without Isolation Ball Valve
	Stainless Steel AISI304 Stainless Steel AISI316 (on request)	Carbon Steel Stainless Steel AISI304/316 (on request)	Probe in Stainless Steel AISI304 (MS 3770); 316 on request Probe in Stainless Steel AISI316 (MS 3810)
	DN 3 ÷ 100	DN 25 ÷ 2400	DN80 ÷ DN8000 Others on request
	PN 16 / PN 25 on request	PN 16, others on request	PN 16 others on request (MS 3770) - PN 25 (MS 3810)
	–20 ÷ 100 °C (compact) 130° with ML4F1 –20 ÷ 150 °C (remote)	0 ÷ 60 °C (Polypropylene) 0 ÷ 70 °C (Rilsan) –5 ÷ 80 °C (Ebonite) –20 ÷ 100 °C (PTFE/compact) –20 ÷ 110 °C (PTFE/remote) –20 ÷ 180 °C (PTFE HT/remote)	0 ÷ 100 °C (compact) 0 ÷ 130 °C (remote) only for MS 3770
	Sanitary DIN11851; Tri-clamp; Tri-clover; SMS etc…	Flanges: UNI, ANSI, DIN, JIS, etc…	1" G or NPT threaded end Others on request
	PTFE	Polypropylene, Ebonite, PTFE, Rilsan etc.	PTFE (MS 3770) PEEK (MS 3810)
	Stainless Steel AISI316L; Hastelloy C; Platinum, Tantalum, Titanium, etc…		Stainless Steel AISI316L Others on request
	Depending on converter		± 2% of measured value*

*Higher accuracies, also at low flow rates, can be reached with special calibrations.

SENSORS-CONVERTERS COUPLINGS

Sensor Model	Converter Model							
	ML 51	ML 110	ML 210 ML 211	ML 145	ML 800 *	ML 255	ML 252 *	ML 4F1 *
MS 501/600	●	●	●	●		●	●	●
MS 1000	●	●	●	●	●	●	●	●
MS 2410	●	●	●	●		●	●	●
MS 2500	●	●	●	●	●	●	●	●
MS 3810	●	●	●	●		●	●	
MS 3770	●	●	●	●		●	●	
MS 5000 'CIAO'	●	●		●	●			

* Blind version only.

Additional I/O Modules for Converters								
2 additional outputs (n.1 at 12,5 KHz)			●					●
Serial Interface RS 485		●	●					●
Serial interface RS 232			●			●	●	
Modbus		●	●					
GPRS module						●		
Profibus DP			●					●
HART			●					
1 0/4–20 mA output + n.2 On/Off prog. Outputs + n. 1 ON/OFF input			●	●	●			
1 RS232 serial interface + n.1 0/4–20 mA + n.2 On/Off prog. outputs			●					
2 relay outputs (each with 1 NO/NC contact, 2A – 250 Vac, 60W 125V)			●					
2 PT100 input + 1 additional 0/4–20 mA output + n.1 ON/OFF input + 1 ON/OFF output (programmable function)			● ML211					
4–20 mA output	●	●	●	●	●			●
2 pressure or level inputs 1 pressure or level input + 1 CPM input						●		

NOMINAL FLOWS

DN	Min full scale v=0,4 m/s		Max full scale v=10 m/s	
3	0	10 l/h	0	250 l/h
6	0	40 l/h	0	1000 l/h
10	0	120 l/h	0	2800 l/h
15	0	240 l/h	0	6000 l/h
20	0	500 l/h	0	11500 l/h
25	0	0,72 m^3/h	0	18 m^3/h
32	0	1,16 m^3/h	0	29 m^3/h
40	0	1,80 m^3/h	0	45 m^3/h
50	0	2,88 m^3/h	0	72 m^3/h
65	0	4,80 m^3/h	0	120 m^3/h
80	0	7,20 m^3/h	0	180 m^3/h
100	0	11,20 m^3/h	0	280 m^3/h
125	0	18,00 m^3/h	0	450 m^3/h
150	0	25,60 m^3/h	0	640 m^3/h
200	0	45,20 m^3/h	0	1130 m^3/h
250	0	70,80 m^3/h	0	1770 m^3/h
300	0	100,80 m^3/h	0	2520 m^3/h
350	0	138,00 m^3/h	0	3450 m^3/h
400	0	180,00 m^3/h	0	4500 m^3/h
450	0	228,80 m^3/h	0	5720 m^3/h
500	0	284,00 m^3/h	0	7100 m^3/h
600	0	408,00 m^3/h	0	10200 m^3/h
700	0	560,00 m^3/h	0	14000 m^3/h
800	0	720,00 m^3/h	0	18000 m^3/h
900	0	920,00 m^3/h	0	23000 m^3/h
1000	0	1140,00 m^3/h	0	28500 m^3/h
1200	0	1600,00 m^3/h	0	40000 m^3/h
1400	0	2200,00 m^3/h	0	55000 m^3/h
1600	0	2880,00 m^3/h	0	72000 m^3/h
1800	0	3640,00 m^3/h	0	91000 m^3/h
2000	0	4520,00 m^3/h	0	113000 m^3/h
2400	0	6400,00 m^3/h	0	160000 m^3/h

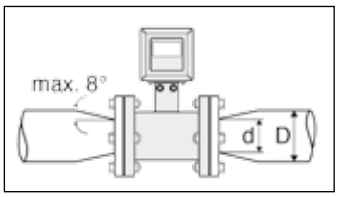

Procedure

Determine the d/D ratio, velocity range, and calculate the pressure loss on the monogram.

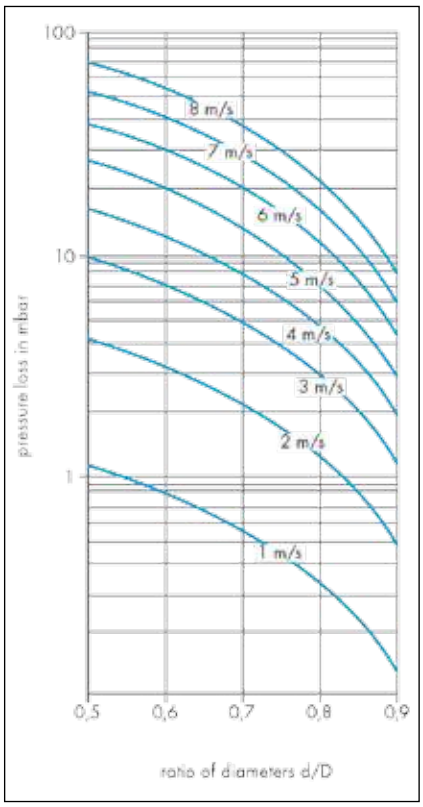

COMPACT SOLUTIONS: CONVERTER + SENSOR

Model Type	MS 3900
Description	Ultracompact flowmeter
Body Material	PTFE coated zinked Steel
DN	10/15/20/32/40/50 mm
Pressure	1600 KPa
Medium temperature	–10 °C to 100 °C
Ambient temperature	–10 °C to 60 °C
Connection	Thread male UNI 338/NPT
Liner	PTFE
Electrodes	Stainless Steel AISI316L
Protection Rate	IP67
Display	No
Ouput/Inputs:	N. 2 ouputs for Volume/alarms; N. 1 freely programmed as input or output N. 1 current output
Temperature measurement	–10 °C to 100 °C, accuracy ±2 °C
Power supply	18-30 VDC
Accuracy class	±1,5% of measured value

Model Type	ML 800
Description	Compact converter
Suitable for	MS1000 – MS2500 – MS5000
Material	Aluminium, AISI 304 on request
DN	up to DN 300
Medium temperature	0 °C to 100 °C
Ambient temperature	–20 °C to 60 °C
Protection rate	IP67
Display	No
Ouput/Inputs:	1 channel freely programmable as INPUT or OUTPUT for volume pulses/alarms
Special features	1 additional digital output; 4–20 mA
Power supply	18-30 VDC
Accuracy class	±0,8% of measured value

Model Type	MS 3790
Description	Ultracompact insertion Flowmeter
Material	AISI 304 full construction
DN	from DN 65
Medium temperature	0 °C to 100 °C
Ambient temperature	–10 °C to 60 °C
Protection rate	IP67
Display	No
Ouput/Inputs:	N. 1 channel freely programmable as INPUT or OUTPUT for volume pulses/alarms
Special features	1 additional digital output; 4–20 mA
Power supply	18-30 VDC
Accuracy class	±2% of measured value

ML 155 DATA LOGGER

ML 155 is a battery operated powerful universal data logger with integrated GPRS.

The instrument is designed to be integrated to, or to retrofit, meters which do not have a GPRS transmission.

The instrument can log up to 3 external signals in different combinations and also drive 2 pressure/level sensors or CPM (Corrosion Protection Module).

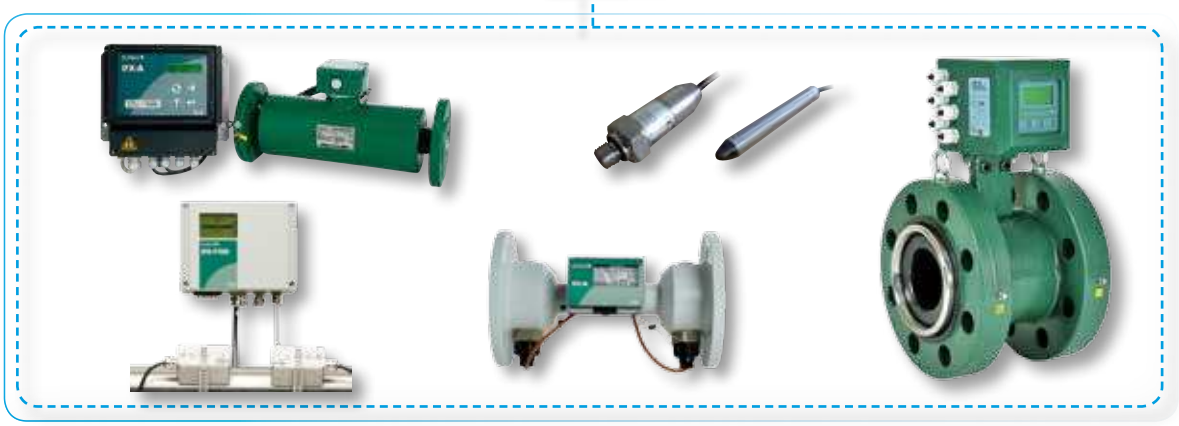

IN SITU VERIFICATION

ISOCAL – Completely automatized flow meter advanced check up, measures the electrical conditions of the sensor and compares the results with the reference stored.
Full verification of all converter I/O.
Emission of report with reference and actual data.

ISOCHECK – Flow simulator is a simple device to be connected to ML 110 or ML 210 converters, making a verification of the electrical and measurement characteristics of the converter.

BIV – Built in verificator, on request for ML 255, consists in a software that automatically and periodically makes a check of the vital electrical characteristics of the sensor, sending an alarm in case of result outside specification and generating a printable report.

ACCESSORIES

IF2 CABLE – Cable to connect all ISOMAG meters to a laptop, including ISOCON sosftware.

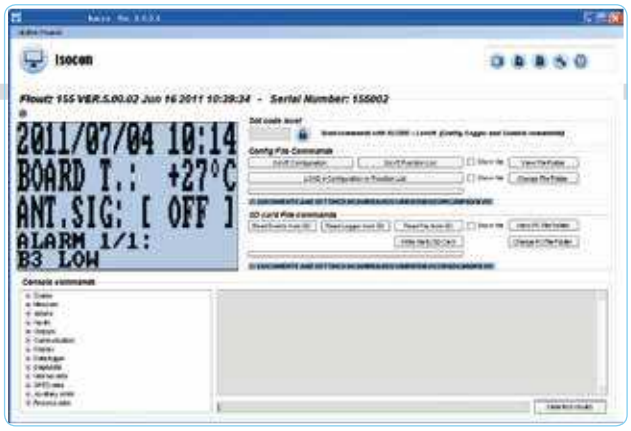

ISOCON – User friendly interface software for an easy access to all meters programmable functions.

PREAMPLIFIER – Useful tool to be mounted on top of the meter when converter must be placed far from a sensor. Maximum distance 500 meters (1640 ft.). It works with ML 210 only.

SEPARATION KIT – Several kits for the transformation of the instruments from compact to separate and vice versa.

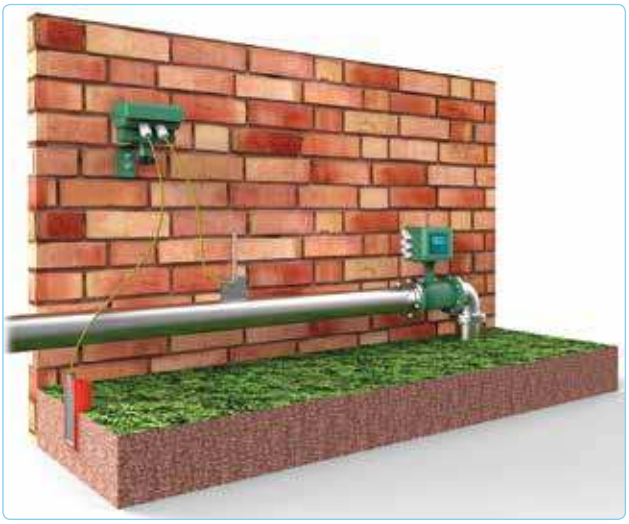

CPM – Corrosion Protection Module additional measuring module able to continuously monitor the electrical potential of the line, giving to user real time information on cathodic protection efficiency.
For ML 255 and ML 155.

APL – Solar panel with external accumulator and electronic for power management, suitable for battery converters.

THE RIGHT FLOWMETER FOR YOUR APPLICATION

	Converter Model									Sensors									
Water & Wastewater	ML 51	ML 110	ML 210	ML 211	ML 145	ML 255	ML 252	ML 4F1	ML 800	MS 501	MS 600	MS 1000	MS 2410	MS 2500	MS 3770	MS 3790	MS 3810	MS 3900	MS 5000
Water distribution	●	●	●		●	●	●					●		●			●		
Water treatment		●	●			●	●		●			●		●					
Sludge/Sewage			●									●		●					
NRW/DMAs		●	●		●	●						●		●			●		
Irrigation	●	●				●	●		●		●	●		●	●	●	●	●	●
General Industry																			
Chemical	●		●					●		●	●	●	●	●				●	
Pulp & Paper			●									●		●					
Food & Beverages		●	●					●		●			●						
Dosing/Batching			●					●		●	●	●	●	●					
Filling machines		●	●					●		●			●						
HVAC	●	●	●	●					●			●		●	●	●		●	

WATER & WASTEWATER

GENERAL INDUSTRY

FOOD & BEVERAGES

HVAC

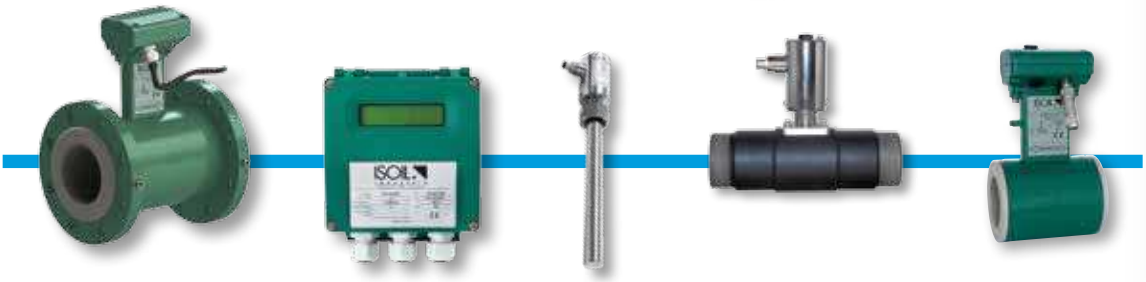

Note: the above are the suggested combinations. For any particular application please contact your local distributor.

CUSTODY TRANSFER & BULK METERING

The OIML R49 recommendations and the European Directive 2004/22CE set out the conditions to which water meters shall comply to meet the requirements of the services of legal metrology in Countries where these instruments are subject to state controls.
The measuring range of the water meter is determined by Q3 (nominal flow rate) and "R" (ratio).

MS 2500 sensor coupled to ML 210 or ML 110 or ML 255 converters are suitable for custody transfer.

Lining materials used on Isomag® sensors are suitable for drinking water and conform to **NSF** and/or **WRAS**.

		SENSOR SIZE										
	mm	**25**	**32**	**40**	**50**	**65**	**80**	**100**	**125**	**150**	**200**	**250**
	inch	*1*	*1¼*	*1½*	*2*	*2½*	*3*	*4*	*5*	*6*	*8*	*10*
Q3	m^3/h	**16,00**	**25,00**	**40,00**	**63,00**	**100,00**	**160,00**	**250,00**	**400,00**	**630,00**	**1000,00**	**1600,00**
Q1, R=100	m^3/h	0,16	0,25	0,40	0,63	1,00	1,60	2,50	4,00	6,30	10,00	16,00
Q1, R=400	m^3/h	0,04	0,06	0,10	0,16	0,25	0,40	0,63	1,00	1,58	2,50	4,00

Q2/Q1 = 1,6 Q4/Q3 = 1,25

FLOW METERS FOR HEAT CALCULATION

MS 2500 sensors coupled to ML 210 or to ML 110 converters are certified according to European Directive 2004/22CE category MI-004, and can be used in e system for heat calculation for billing purpose.

		SENSOR SIZE									
	mm	**25**	**32**	**40**	**50**	**65**	**80**	**100**	**125**	**150**	**200**
	inch	*1*	*1¼*	*1½*	*2*	*2½*	*3*	*4*	*5*	*6*	*8*
q_i	m^3/h	0,16	0,25	0,4	63	100	160	250	400	630	1000
q_p (10 m/s)	m^3/h	16	25	40	63	100	160	250	400	630	1000

Available q_p/q_i: 10 - 25 - 50 - 100 (flows in table are referred to MC100)

TEST BENCH AND ISO17025 CALIBRATION LABORATORY

Isoil flow meters are tested on ISO 17025 certified benches when leaving the factory, the original accuracy can be granted for years when the meter is working within its specifications.

Thanks to the Accredited Calibration Laboratory named Libra, conforming to UNI EN ISO/IEC 17025 standard (ACCREDIA CERTIFICATE LAT 237), Isoil can offer Calibration service for liquid flow meters for any type of flow meters in volume and volumetric flow. Currently on the 7 testing lines benches can be calibrated sensors up to DN800, the eighth line for bigger diameters is under construction.

Production Center and Warehouse.

Information shown in this brochure are not exhaustive, for detailed characteristics refer to individual data sheet.

09/2015 – www.gandini-rendina.it

ISOIL INDUSTRIA
Cinisello B. - Mi (Italy)
Ph. +39 0266027.1
www.isomag.eu
sales@isoil.it

ISOMAG®
The friendly magmeter

COMPANY WITH QUALITY SYSTEM CERTIFIED BY DNV GL = ISO 9001 =

E.3 Siemens S7-1200 CPU 1212c

SIEMENS

Datasheet 6ES7212-1BE40-0XB0

SIMATIC S7-1200, CPU 1212C, COMPACT CPU, AC/DC/RLY, ONBOARD I/O: 8 DI 24V DC; 6 DO RELAY 2A; 2 AI 0 - 10V DC, POWER SUPPLY: AC 85 - 264 V AC AT 47 - 63 HZ, PROGRAM/DATA MEMORY: 50 KB

Display	
with display	No
Supply voltage	
Rated value (AC)	
• 120 V AC	Yes
• 230 V AC	Yes
permissible range, lower limit (AC)	85 V
permissible range, upper limit (AC)	264 V
Line frequency	
• permissible frequency range, lower limit	47 Hz
• permissible frequency range, upper limit	63 Hz
Input current	
Current consumption (rated value)	80 mA at 120 V AC; 40 mA at 240 V AC
Inrush current, max.	20 A; at 264 V
Encoder supply	
24 V encoder supply	
• 24 V	Permissible range: 20.4V to 28.8V
Output current	
Current output to backplane bus (DC 5 V), max.	1 000 mA; Max. 5 V DC for SM and CM
Power losses	
Power loss, typ.	11 W
Memory	
Type of memory	EEPROM

Usable memory for user data	75 kbyte
Work memory	
• Integrated	50 kbyte
• expandable	No
Load memory	
• Integrated	1 Mbyte
• Plug-in (SIMATIC Memory Card), max.	2 Gbyte; with SIMATIC memory card
Backup	
• present	Yes; maintenance-free
• without battery	Yes

CPU processing times	
for bit operations, typ.	0.085 µs; / Operation
for word operations, typ.	1.7 µs; / Operation
for floating point arithmetic, typ.	2.3 µs; / Operation

CPU-blocks	
Number of blocks (total)	DBs, FCs, FBs, counters and timers. The maximum number of addressable blocks ranges from 1 to 65535. There is no restriction, the entire working memory can be used
OB	
• Number, max.	Limited only by RAM for code

Data areas and their retentivity	
retentive data area in total (incl. times, counters, flags), max.	10 kbyte
Flag	
• Number, max.	4 kbyte; Size of bit memory address area

Address area	
I/O address area	
• Inputs	1 024 byte
• Outputs	1 024 byte
Process image	
• Inputs, adjustable	1 kbyte
• Outputs, adjustable	1 kbyte

Hardware configuration	
Number of modules per system, max.	3 comm. modules, 1 signal board, 2 signal modules

Time of day	
Clock	
• Hardware clock (real-time clock)	Yes
• Deviation per day, max.	+/- 60 s/month at 25 °C
• Backup time	480 h; Typical

Digital inputs

Number of digital inputs	8; Integrated
• of which, inputs usable for technological functions	6; HSC (High Speed Counting)
integrated channels (DI)	8
m/p-reading	Yes
Number of simultaneously controllable inputs	
all mounting positions	
— up to 40 °C, max.	8
Input voltage	
• Rated value (DC)	24 V
• for signal "0"	5 V DC at 1 mA
• for signal "1"	15 VDC at 2.5 mA
Input current	
• for signal "1", typ.	1 mA
Input delay (for rated value of input voltage)	
for standard inputs	
— Parameterizable	0.1 / 0.2 / 0.4 / 0.8 / 1.6 / 3.2 / 6.4 / 10.0 / 12.8 / 20.0 µs; 0.05 / 0.1 / 0.2 / 0.4 / 0.8 / 1.6 / 3.2 / 6.4 / 10.0 / 12.8 / 20.0 ms
— at "0" to "1", min.	0.1 µs
— at "0" to "1", max.	20 ms
for interrupt inputs	
— Parameterizable	Yes
for counter/technological functions	
— Parameterizable	Yes; Single phase : 3 at 100 kHz & 3 at 30 kHz, differential: 3 at 80 kHz & 3 at 30 kHz
Cable length	
• Cable length, shielded, max.	500 m; 50 m for technological functions
• Cable length unshielded, max.	300 m; For technological functions: No

Digital outputs	
Number of digital outputs	6; Relays
integrated channels (DO)	6
short-circuit protection	No; to be provided externally
Switching capacity of the outputs	
• with resistive load, max.	2 A
• on lamp load, max.	30 W with DC, 200 W with AC
Output delay with resistive load	
• "0" to "1", max.	10 ms; max.
• "1" to "0", max.	10 ms; max.
Switching frequency	
• of the pulse outputs, with resistive load, max.	1 Hz
Relay outputs	
• Max. number of relay outputs, integrated	6

• Number of relay outputs	6
• Number of operating cycles, max.	mechanically 10 million, at rated load voltage 100,000
Cable length	
• Cable length, shielded, max.	500 m
• Cable length unshielded, max.	150 m

Analog inputs	
Number of analog inputs	2
Integrated channels (AI)	2; 0 to 10 V
Input ranges	
• Voltage	Yes
Input ranges (rated values), voltages	
• 0 to +10 V	Yes
• Input resistance (0 to 10 V)	≥100k ohms
Cable length	
• Cable length, shielded, max.	100 m; twisted and shielded

Analog outputs	
Number of analog outputs	0

Analog value creation	
Integration and conversion time/resolution per channel	
• Resolution with overrange (bit including sign), max.	10 bit
• Integration time, parameterizable	Yes
• Conversion time (per channel)	625 µs

Encoder	
Connectable encoders	
• 2-wire sensor	Yes

1. Interface	
Interface type	PROFINET
Physics	Ethernet
Isolated	Yes
Automatic detection of transmission speed	Yes
Autonegotiation	Yes
Autocrossing	Yes
Functionality	
• PROFINET IO Device	Yes
• PROFINET IO Controller	Yes
PROFINET IO Controller	
• Prioritized startup supported	
— Number of IO Devices, max.	16

Communication functions

S7 communication	
• supported	Yes
• as server	Yes
• As client	Yes
Open IE communication	
• TCP/IP	Yes
• ISO-on-TCP (RFC1006)	Yes
• UDP	Yes
Web server	
• supported	Yes
• User-defined websites	Yes

Test commissioning functions	
Status/control	
• Status/control variable	Yes
• Variables	Inputs/outputs, memory bits, DBs, distributed I/Os, timers, counters
Forcing	
• Forcing	Yes
Diagnostic buffer	
• present	Yes
Traces	
• Number of configurable Traces	2; Up to 512 KB of data per trace are possible

Integrated Functions	
Number of counters	4
Counter frequency (counter) max.	100 kHz
Frequency meter	Yes
controlled positioning	Yes
PID controller	Yes
Number of alarm inputs	4
Number of pulse outputs	4

Galvanic isolation	
Galvanic isolation digital inputs	
• Galvanic isolation digital inputs	500V AC for 1 minute
• between the channels, in groups of	1
Galvanic isolation digital outputs	
• Galvanic isolation digital outputs	Relays
• between the channels	No
• between the channels, in groups of	1

Permissible potential difference	
between different circuits	500 V DC between 24 V DC and 5 V DC

EMC	
Interference immunity against discharge of static electricity	
• Interference immunity against discharge of static electricity acc. to IEC 61000-4-2	Yes
— Test voltage at air discharge	8 kV
— Test voltage at contact discharge	6 kV
Interference immunity to cable-borne interference	
• Interference immunity on supply lines acc. to IEC 61000-4-4	Yes
• Interference immunity on signal lines acc. to IEC 61000-4-4	Yes
Surge immunity	
• on the supply lines acc. to IEC 61000-4-5	Yes
Immunity against conducted interference induced by high-frequency fields	
• Interference immunity against high-frequency radiation acc. to IEC 61000-4-6	Yes
Emission of radio interference acc. to EN 55 011	
• Limit class A, for use in industrial areas	Yes; Group 1
• Limit class B, for use in residential areas	Yes; When appropriate measures are used to ensure compliance with the limits for Class B according to EN 55011

Degree and class of protection	
Degree of protection to EN 60529	
• IP20	Yes

Standards, approvals, certificates	
CE mark	Yes
UL approval	Yes
cULus	Yes
RCM (formerly C-TICK)	Yes
FM approval	Yes
Marine approval	
• Marine approval	Yes

Ambient conditions	
Free fall	
• Drop height, max. (in packaging)	0.3 m; five times, in dispatch package
Ambient temperature in operation	
• during operating phase, minimum	-20 °C
• max.	60 °C
• horizontal installation, min.	-20 °C
• horizontal installation, max.	60 °C
• vertical installation, min.	-20 °C
• vertical installation, max.	50 °C
Storage/transport temperature	

• Min.	-40 °C
• max.	70 °C
Air pressure	
• Operation, min.	795 hPa
• Operation, max.	1 080 hPa
• Storage/transport, min.	660 hPa
• Storage/transport, max.	1 080 hPa
• Permissible operating height	-1000 to 2000 m
Relative humidity	
• Operation, max.	95 %; no condensation
• Permissible range (without condensation) at 25 °C	95 %
Vibrations	
• Vibrations	2G wall mounting, 1G DIN rail
• Operation, checked according to IEC 60068-2-6	Yes
Shock test	
• checked according to IEC 60068-2-27	Yes; IEC 68, Part 2-27 half-sine: strength of the shock 15 g (peak value), duration 11 ms
Pollutant concentrations	
— SO2 at RH < 60% without condensation	S02: < 0.5 ppm; H2S: < 0.1 ppm; RH < 60% condensation-free
programming	
Programming language	
— LAD	Yes
— FBD	Yes
— SCL	Yes
Cycle time monitoring	
• can be set	Yes

Dimensions	
Width	90 mm
Height	100 mm
Depth	75 mm

Weights	
Weight, approx.	425 g
last modified:	05.02.2015

E.4 Siemens S7-1200 SM 1234

SIEMENS

Data sheet 6ES7234-4HE32-0XB0

SIMATIC S7-1200, ANALOG I/O SM 1234, 4 AI / 2 AO, +/-10V, 14 BIT RESOLUTION OR 0(4) - 20 MA, 13 BIT RESOLUTION

Supply voltage	
Rated value (DC)	
• 24 V DC	Yes

Input current	
Current consumption, typ.	60 mA
from backplane bus 5 V DC, typ.	80 mA

Power loss	
Power loss, typ.	2 W

Analog inputs	
Number of analog inputs	4; Current or voltage differential inputs
permissible input voltage for current input (destruction limit), max.	± 35 V
permissible input voltage for voltage input (destruction limit), max.	35 V
permissible input current for voltage input (destruction limit), max.	40 mA
permissible input current for current input (destruction limit), max.	40 mA

Cycle time (all channels) max.	625 µs
Input ranges	
• Voltage	Yes; ±10V, ±5V, ±2.5V
• Current	Yes; 4 to 20 mA, 0 to 20 mA
Input ranges (rated values), voltages	
• -10 V to +10 V	Yes
• Input resistance (-10 V to +10 V)	≥9 MOhm
• -2.5 V to +2.5 V	Yes
• Input resistance (-2.5 V to +2.5 V)	≥9 MOhm
• -5 V to +5 V	Yes
• Input resistance (-5 V to +5 V)	≥9 MOhm
Input ranges (rated values), currents	
• 0 to 20 mA	Yes
• Input resistance (0 to 20 mA)	280 Ω
• 4 mA to 20 mA	Yes

Analog outputs	
Number of analog outputs	2; Current or voltage
Output ranges, voltage	
• -10 V to +10 V	Yes
Output ranges, current	
• 0 to 20 mA	Yes
• 4 mA to 20 mA	Yes
Load impedance (in rated range of output)	
• with voltage outputs, min.	1 000 Ω
• with current outputs, max.	600 Ω

Analog value generation for the inputs	
Measurement principle	Differential
Integration and conversion time/resolution per channel	
• Resolution with overrange (bit including sign), max.	12 bit; + sign
• Integration time, parameterizable	Yes
• Interference voltage suppression for interference frequency f1 in Hz	40 dB, DC to 60 V for interference frequency 50 / 60 Hz
Smoothing of measured values	
• parameterizable	Yes
• Step: None	Yes
• Step: low	Yes
• Step: Medium	Yes
• Step: High	Yes

Analog value generation for the outputs
Integration and conversion time/resolution per channel

• Resolution (incl. overrange)	Voltage: 14 bits; Current : 13 bits
Errors/accuracies	
Temperature error (relative to input range), (+/-)	25 °C ±0.1%, to 55 °C ±0.2% total measurement range
Temperature error (relative to output range), (+/-)	25 °C ±0.3%, to 55 °C ±0.6% total measurement range
Basic error limit (operational limit at 25 °C)	
• Voltage, relative to input range, (+/-)	0.1 %
• Current, relative to input range, (+/-)	0.1 %
• Voltage, relative to output range, (+/-)	0.3 %
• Current, relative to output range, (+/-)	0.3 %
Interference voltage suppression for f = n x (f1 +/- 1 %), f1 = interference frequency	
• Common mode voltage, max.	12 V
Interrupts/diagnostics/status information	
Alarms	Yes
Diagnostic functions	Yes
Alarms	
• Diagnostic alarm	Yes
Diagnostic messages	
• Monitoring the supply voltage	Yes
• Wire-break	Yes
• Short-circuit	Yes
Diagnostics indication LED	
• for status of the inputs	Yes
• for status of the outputs	Yes
• for maintenance	Yes
Potential separation	
Potential separation analog outputs	
• between the channels and the power supply of the electronics	No
Degree and class of protection	
Degree of protection acc. to EN 60529	
• IP20	Yes
Standards, approvals, certificates	
CE mark	Yes
CSA approval	Yes
FM approval	Yes
RCM (formerly C-TICK)	Yes
Marine approval	Yes
Ambient conditions	
Free fall	
• Fall height, max.	0.3 m; five times, in product package

Ambient temperature during operation	
• min.	-20 °C
• max.	60 °C
• horizontal installation, min.	-20 °C
• horizontal installation, max.	60 °C
• vertical installation, min.	-20 °C
• vertical installation, max.	50 °C
Ambient temperature during storage/transportation	
• min.	-40 °C
• max.	70 °C
Air pressure acc. to IEC 60068-2-13	
• Operation, min.	795 hPa
• Operation, max.	1 080 hPa
• Storage/transport, min.	660 hPa
• Storage/transport, max.	1 080 hPa
Relative humidity	
• Operation at 25 °C without condensation, max.	95 %
Extended ambient conditions	
Pollutant concentrations	
— SO2 at RH < 60% without condensation	S02: < 0.5 ppm; H2S: < 0.1 ppm; RH < 60% condensation-free

Connection method	
required front connector	Yes

Mechanics/material	
Enclosure material (front)	
• Plastic	Yes

Dimensions	
Width	45 mm
Height	100 mm
Depth	75 mm

Weights	
Weight, approx.	220 g

last modified:	07/31/2017

E.5 Siemens S7-1200 SM 1231

SIEMENS

Data sheet 6ES7231-5QD32-0XB0

SIMATIC S7-1200, ANALOG INPUT, SM 1231 TC, 4 AI THERMOCOUPLE

Supply voltage	
Rated value (DC)	
• 24 V DC	Yes
Input current	
Current consumption, typ.	40 mA
from backplane bus 5 V DC, typ.	80 mA
Power losses	
Power loss, typ.	1.5 W
Analog inputs	
Number of analog inputs	4; Thermocouples
permissible input frequency for current input (destruction limit), max.	± 35 V
Technical unit for temperature measurement adjustable	Degrees Celsius/degrees Fahrenheit
Input ranges	
• Thermocouple	Yes; J, K, T, E, R, S, N, C, TXK/XK(L); voltage range: +/-80 mV
• Resistance thermometer	No
• Resistance	No
Input ranges (rated values), voltages	
• -80 mV to +80 mV	Yes
• Input resistance (-80 mV to +80 mV)	>= 1 MOhm
Input ranges (rated values), thermoelements	
• Type B	Yes
• Type C	Yes

• Type E	Yes
• Type J	Yes
• Type K	Yes
• Type N	Yes
• Type R	Yes
• Type S	Yes
• Type T	Yes
• Type TXK/TXK(L) to GOST	Yes
Thermocouple (TC)	
• permissible input voltage for voltage input (destruction limit), max.	+-35 V
Temperature compensation	
— Parameterizable	No

Analog outputs	
Number of analog outputs	0

Analog value creation	
Measurement principle	integrating
Integration and conversion time/resolution per channel	
• Resolution with overrange (bit including sign), max.	15 bit; + sign
• Integration time, parameterizable	No
• Interference voltage suppression for interference frequency f1 in Hz	85 dB at 50 / 60 / 400 Hz

Analog value generation (in isochronous mode)	
Smoothing of measured values	
• Parameterizable	Yes

Errors/accuracies	
Temperature error (relative to input range), (+/-)	25 °C ±0.1%, to 55 °C ±0.2% total measurement range
Repeat accuracy in steady state at 25 °C (relative to output area), (+/-)	0.5 %
Interference voltage suppression for f = n x (f1 +/- 1 %), f1 = interference frequency	
• Common mode interference, min.	120 dB

Interrupts/diagnostics/status information	
Alarms	
• Alarms	Yes
• Diagnostic alarm	Yes
Diagnostic messages	
• Diagnostic functions	Yes; Can be read out
• Monitoring the supply voltage	Yes
• Wire break	Yes
Diagnostics indication LED	

• for status of the inputs	Yes
• for maintenance	Yes
Degree and class of protection	
Degree of protection to EN 60529	
• IP20	Yes
Standards, approvals, certificates	
CE mark	Yes
CSA approval	Yes
FM approval	Yes
RCM (formerly C-TICK)	Yes
Highest safety class achievable in safety mode	
• SIL acc. to IEC 61508	none
Ambient conditions	
Free fall	
• Drop height, max. (in packaging)	0.3 m; five times, in dispatch package
Ambient temperature in operation	
• Permissible temperature range	-20 °C to +60 °C horizontal mounting, -20 °C to 50 °C vertical mounting, 95% humidity, non-condensing
• Min.	-20 °C
• max.	60 °C
Ambient temperature during storage/transportation	
• Min.	-40 °C
• max.	70 °C
Air pressure acc. to IEC 60068-2-13	
• Operation, min.	795 hPa
• Operation, max.	1 080 hPa
• Storage/transport, min.	660 hPa
• Storage/transport, max.	1 080 hPa
Relative humidity	
• Permissible range (without condensation) at 25 °C	95 %
Pollutant concentrations	
— SO2 at RH < 60% without condensation	S02: < 0.5 ppm; H2S: < 0.1 ppm; RH < 60% condensation-free
Connection method	
required front connector	Yes
Mechanics/material	
Type of housing (front)	
• plastic	Yes
Dimensions	
Width	45 mm

Height	100 mm
Depth	75 mm

Weights	
Weight, approx.	180 g

last modified:	20.04.2015

E.6 Siemens S7-1200 CSM 1277

SIEMENS

Data sheet 6GK7277-1AA10-0AA0

Product type designation

CSM 1277
COMPACT SWITCH MODULE CSM 1277 CONNECTION SIMATIC S7-1200 AND UP TO 3 FURTHER IND. ETHERNET USERS WITH 10/100 MBIT/S UNMANAGED SWITCH, 4 RJ45 PORTS, EXT. 24V DC POWER SUPPLY, LED DIAGNOSTICS, S7-1200 MODULE INCL. ELECTRONIC MANUAL ON CD

Transmission rate	
Transfer rate	10 Mbit/s, 100 Mbit/s

Interfaces	
Number of electrical/optical connections	
• for network components or terminal equipment / maximum	4
Number of electrical connections	
• for network components or terminal equipment	4
Type of electrical connection	
• for network components or terminal equipment	RJ45 port

Interfaces / for communication / integrated	
Number of 100 Mbit/s SC ports	
• for multimode	0
Number of 1000 Mbit/s LC ports	
• for multimode	0
• for single mode (LD)	0

Interfaces / others	
Number of electrical connections	
• for power supply	1
Type of electrical connection	
• for power supply	3-pole terminal block

Supply voltage, current consumption, power loss	
Type of voltage / of the supply voltage	DC

Supply voltage	
• external	24 V
• external	19.2 ... 28.8 V
Product component / fusing at power supply input	Yes
Fuse protection type / at input for supply voltage	0.5 A / 60 V
Consumed current / maximum	0.07 A
Active power loss	
• for DC / at 24 V	1.6 W

Permitted ambient conditions

Ambient temperature	
• during operation	0 ... 60 °C
• during storage	-40 ... +70 °C
• during transport	-40 ... +70 °C
Relative humidity	
• at 25 °C / without condensation / during operation / maximum	95 %
Protection class IP	IP20

Design, dimensions and weight

Design	SIMATIC S7-1200 device design
Width	45 mm
Height	100 mm
Depth	75 mm
Net weight	0.15 kg
Mounting type	
• 35 mm DIN rail mounting	Yes
• wall mounting	Yes
• S7-300 rail mounting	No
• S7-1500 rail mounting	No

Product functions / management, configuration

Product function	
• multiport mirroring	No
• switch-managed	No

Standards, specifications, approvals

Standard	
• for FM	FM3611: Class 1, Divison 2, Group A, B, C, D / T.., CL.1, Zone 2, GP. IIC, T.. Ta
• for hazardous zone	EN 600079-15:2005, EN 600079-0:2006, II 3 G Ex nA II T4, KEMA 08 ATEX 0003 X
• for safety / from CSA and UL	UL 508, CSA C22.2 No. 142
• for emitted interference	EN 61000-6-4 (Class A)
• for interference immunity	EN 61000-6-2

Certificate of suitability	EN 61000-6-2, EN 61000-6-4
• CE marking	Yes
• C-Tick	Yes
• KC approval	No
Marine classification association	
• American Bureau of Shipping Europe Ltd. (ABS)	No
• Bureau Veritas (BV)	No
• Det Norske Veritas (DNV)	No
• Germanische Lloyd (GL)	No
• Lloyds Register of Shipping (LRS)	No
• Nippon Kaiji Kyokai (NK)	No
• Polski Rejestr Statkow (PRS)	No
MTBF / at 40 °C	273 y

Further Information / Internet Links

Internet-Link	
• to website: Selector SIMATIC NET SELECTION TOOL	http://www.siemens.com/snst
• to website: Industrial communication	http://www.siemens.com/simatic-net
• to website: Industry Mall	https://mall.industry.siemens.com
• to website: Information and Download Center	http://www.siemens.com/automation/net/catalog
• to website: Image database	http://automation.siemens.com/bilddb
• to website: CAx Download Manager	http://www.siemens.com/cax
• to website: Industry Online Support	https://support.industry.siemens.com

Security information

Security information	Siemens provides products and solutions with industrial security functions that support the secure operation of plants, solutions, machines, equipment and/or networks. They are important components in a holistic industrial security concept. With this in mind, Siemens' products and solutions undergo continuous development. Siemens recommends strongly that you regularly check for product updates. For the secure operation of Siemens products and solutions, it is necessary to take suitable preventive action(e.g. cell protection concept) and integrate each component into a holistic, state-of-the-art industrial security concept. Third-party products that may be in use should also be considered. For more information about industrial security, visit http://www.siemens.com/industrialsecurity. To stay informed about product updates as they occur, sign up for a product-specific newsletter. For more information, visit http://support.automation.siemens.com. (V3.4)

last modified: 14.04.2015

E.7 Siemens HMI KTP400 Basic

SIEMENS

Data sheet 6AV2123-2DB03-0AX0

SIMATIC HMI, KTP400 BASIC, BASIC PANEL, KEY AND TOUCH OPERATION, 4" TFT DISPLAY, 65536 COLORS, PROFINET INTERFACE, CONFIGURATION FROM WINCC BASIC V13/ STEP7 BASIC V13, CONTAINS OPEN SOURCE SW WHICH IS PROVIDED FREE OF CHARGE FOR DETAILS SEE CD

General information	
Product type designation	SIMATIC HMI KTP400 Basic

Display	
Design of display	TFT widescreen display, LED backlighting
Screen diagonal	4.3 in
Display width	95 mm
Display height	53.9 mm
Number of colors	65 536
Resolution (pixels)	
• Horizontal image resolution	480 Pixel
• Vertical image resolution	272 Pixel
Backlighting	
• MTBF backlighting (at 25 °C)	20 000 h
• Backlight dimmable	Yes

Control elements	
Keyboard fonts	
• Function keys	
— Number of function keys	4

— Number of function keys with LEDs	0
• Keys with LED	No
• System keys	No
• Numeric keyboard	Yes; Onscreen keyboard
• alphanumeric keyboard	Yes; Onscreen keyboard
Touch operation	
• Design as touch screen	Yes

Installation type/mounting	
Mounting position	Horizontal, vertical
Mounting in portrait format possible	Yes
Mounting in landscape format possible	Yes
maximum permissible angle of inclination without external ventilation	35°

Supply voltage	
Type of supply voltage	DC
Rated value (DC)	24 V
permissible range, lower limit (DC)	19.2 V
permissible range, upper limit (DC)	28.8 V

Input current	
Current consumption (rated value)	125 mA
Starting current inrush I^2t	0.2 $A^2 \cdot s$

Power	
Active power input, typ.	3 W

Processor	
Processor type	ARM

Memory	
Flash	Yes
RAM	Yes
Memory available for user data	10 Mbyte

Type of output	
Acoustics	
• Buzzer	Yes
• Speaker	No

Time of day	
Clock	
• Hardware clock (real-time)	Yes
• Software clock	Yes
• retentive	Yes; Back-up duration typically 6 weeks
• synchronizable	Yes

Interfaces	
Number of industrial Ethernet interfaces	1
Number of RS 485 interfaces	0
Number of RS 422 interfaces	0
Number of RS 232 interfaces	0
Number of USB interfaces	1; Up to 16 GB
Number of 20 mA interfaces (TTY)	0
Number of parallel interfaces	0
Number of other interfaces	0
Number of SD card slots	0
With software interfaces	No
Industrial Ethernet	
• Industrial Ethernet status LED	2

Protocols	
PROFINET	Yes
Supports protocol for PROFINET IO	No
IRT	No
MRP	No
PROFIBUS	No
MPI	No
Protocols (Ethernet)	
• TCP/IP	Yes
• DHCP	Yes
• SNMP	Yes
• DCP	Yes
• LLDP	Yes
WEB characteristics	
• HTTP	No
• HTML	No
Further protocols	
• CAN	No
• EtherNet/IP	Yes
• MODBUS	Yes; Modicon (MODBUS TCP/IP)

Interrupts/diagnostics/status information	
Diagnostic messages	
• Diagnostic information readable	No

EMC	
Emission of radio interference acc. to EN 55 011	
• Limit class A, for use in industrial areas	Yes
• Limit class B, for use in residential areas	No

Degree and class of protection

IP (at the front)	IP65
Enclosure Type 4 at the front	Yes
Enclosure Type 4x at the front	Yes
IP (rear)	IP20

Standards, approvals, certificates	
CE mark	Yes
cULus	Yes
RCM (formerly C-TICK)	Yes
KC approval	Yes
Marine approval	
• Germanischer Lloyd (GL)	Yes
• American Bureau of Shipping (ABS)	Yes
• Bureau Veritas (BV)	Yes
• Det Norske Veritas (DNV)	Yes
• Lloyds Register of Shipping (LRS)	Yes
• Nippon Kaiji Kyokai (Class NK)	Yes
• Polski Rejestr Statkow (PRS)	No
• Chinese Classification Society (CCS)	No
Use in hazardous areas	
• ATEX Zone 2	No
• ATEX Zone 22	No
• IECEx Zone 2	No
• IECEx Zone 22	No
• cULus Class I Zone 1	No
• cULus Class I Zone 2, Division 2	No
• FM Class I Division 2	No

Ambient conditions	
Suited for indoor use	Yes
Suited for outdoor use	No
Ambient temperature during operation	
• Operation (vertical installation)	
— For vertical installation, min.	0 °C
— For vertical installation, max.	50 °C
• Operation (max. tilt angle)	
— At maximum tilt angle, min.	0 °C
— At maximum tilt angle, min.	40 °C
• Operation (vertical installation, portrait format)	
— For vertical installation, min.	0 °C
— For vertical installation, max.	40 °C
• Operation (max. tilt angle, portrait format)	
— At maximum tilt angle, min.	0 °C

— At maximum tilt angle, min.	35 °C
Ambient temperature during storage/transportation	
• min.	-20 °C
• max.	60 °C
Relative humidity	
• Operation, max.	90 %; no condensation

Operating systems	
proprietary	Yes
pre-installed operating system	
• Windows CE	No

Configuration	
Message indicator	Yes
Alarm system (incl. buffer and acknowledgment)	Yes
Process value display (output)	Yes
Process value default (input) possible	Yes
Recipe management	Yes
Configuration software	
• STEP 7 Basic (TIA Portal)	Yes; via integrated WinCC Basic (TIA Portal)
• STEP 7 Professional (TIA Portal)	Yes; via integrated WinCC Basic (TIA Portal)
• WinCC flexible Compact	No
• WinCC flexible Standard	No
• WinCC flexible Advanced	No
• WinCC Basic (TIA Portal)	Yes
• WinCC Comfort (TIA Portal)	Yes
• WinCC Advanced (TIA Portal)	Yes
• WinCC Professional (TIA Portal)	Yes

Languages	
Online languages	
• Number of online/runtime languages	10
Project languages	
• Languages per project	32

Functionality under WinCC (TIA Portal)	
Libraries	Yes
Applications/options	
• Web browser	Yes
• SIMATIC WinCC Sm@rtServer	Yes; Available with WinCC (TIA Portal) V14 or higher
Number of Visual Basic Scripts	No
Task planner	Yes
• time-controlled	No
• task-controlled	Yes
Help system	Yes

• Number of characters per info text	500
Message system	
• Number of alarm classes	32
• Bit messages	
— Number of bit messages	1 000
• Analog messages	
— Number of analog messages	25
• S7 alarm number procedure	No
• System messages HMI	Yes
• System messages, other (SIMATIC S7, Sinumerik, Simotion, etc.)	Yes; System message buffer of the SIMATIC S7-1200 and S7-1500
• Number of characters per message	80
• Number of process values per message	8
• Acknowledgment groups	Yes
• Message indicator	Yes
• Message buffer	
— Number of entries	256
— Circulating buffer	Yes
— retentive	Yes
— maintenance-free	Yes
Recipe management	
• Number of recipes	50
• Data records per recipe	100
• Entries per data record	100
• Size of internal recipe memory	256 kbyte
• Recipe memory expandable	No
Variables	
• Number of variables per device	800
• Number of variables per screen	100
• Limit values	Yes
• Multiplexing	Yes
• Structures	No
• Arrays	Yes
Images	
• Number of configurable images	250
• Permanent window/default	Yes
• Global image	Yes
• Pop-up images	No
• Slide-in images	No
• Image selection by PLC	Yes
• Image number in the PLC	Yes

Image objects	
• Number of objects per image	100
• Text fields	Yes
• I/O fields	Yes
• Graphic I/O fields (graphics list)	Yes
• Symbolic I/O fields (text list)	Yes
• Date/time fields	Yes
• Switches	Yes
• Buttons	Yes
• Graphic display	Yes
• Icons	Yes
• Geometric objects	Yes
Complex image objects	
• Number of complex objects per screen	10
• Alarm view	Yes
• Trend view	Yes
• User view	Yes
• Status/control	No
• Sm@rtClient view	No
• Recipe view	Yes
• f(x) trend view	No
• System diagnostics view	Yes; System message buffer of the SIMATIC S7-1200 and S7-1500
• Media Player	No
• HTML browser	Yes
• PDF display	No
• IP camera display	No
• Bar graphs	Yes
• Sliders	No
• Pointer instruments	No
• Analog/digital clock	No
Lists	
• Number of text lists per project	300
• Number of entries per text list	100
• Number of graphics lists per project	100
• Number of entries per graphics list	100
Archiving	
• Number of archives per device	2; One message and one process value archive
• Number of entries per archive	10 000
• Message archive	Yes
• Process value archive	Yes

• Archiving methods	
— Sequential archive	Yes
— Short-term archive	Yes
• Memory location	
— Memory card	No
— USB memory	Yes
— Ethernet	No
• Data storage format	
— CSV	No
— TXT	Yes
— RDB	No
Security	
• Number of user groups	50
• Number of user rights	32
• Number of users	50
• Password export/import	Yes
• SIMATIC Logon	No
Character sets	
• Keyboard fonts	
— US English	Yes
Transfer (upload/download)	
• MPI/PROFIBUS DP	No
• USB	No
• Ethernet	Yes
• using external storage medium	Yes
Process coupling	
• S7-1200	Yes
• S7-1500	Yes
• S7-200	Yes
• S7-300/400	Yes
• LOGO!	Yes
• WinAC	Yes
• SINUMERIK	Yes; No access to NCK data
• SIMOTION	Yes
• Allen Bradley (EtherNet/IP)	Yes
• Allen Bradley (DF1)	No
• Mitsubishi (MC TCP/IP)	Yes
• Mitsubishi (FX)	No
• OMRON (FINS TCP)	No
• OMRON (LINK/Multilink)	No
• Modicon (Modbus TCP/IP)	Yes

• Modicon (Modbus)	No
Service tools/configuration aids	
• Backup/Restore manually	Yes
• Backup/Restore automatically	No
• Simulation	Yes
• Device switchover	Yes

Peripherals/Options	
Peripherals	
• Printer	No
• SIMATIC HMI MM memory card: Multi Media Card	No
• SIMATIC HMI SD memory card: Secure Digital memory card	No
• SIMATIC HMI CF memory card Compact Flash Card	No
• USB memory	Yes
• SIMATIC IPC USB Flashdrive (USB stick)	Yes
• SIMATIC HMI USB stick	Yes

Mechanics/material	
Enclosure material (front)	
• Plastic	Yes
• Aluminum	No
• Stainless steel	No

Dimensions	
Width of the housing front	141 mm
Height of housing front	116 mm
Mounting cutout, width	123 mm
Mounting cutout, height	99 mm
Overall depth	33 mm

Weights	
Weight without packaging	360 g
Weight incl. packaging	470 g

last modified:	08/12/2017