Reactive power and voltage control interaction and optimization in the Danish largest wind power plant at Kriegers Flak

Akhmatov, Vladislav; Wu, Qiuwei; Takarics, Tibor

Published in:
Journal of Physics: Conference Series

Link to article, DOI:
10.1088/1742-6596/1102/1/012031

Publication date:
2018

Document Version
Publisher's PDF, also known as Version of record

Journal of Physics: Conference Series

PAPER • **OPEN ACCESS**

Reactive power and voltage control interaction and optimization in the Danish largest wind power plant at Kriegers Flak

To cite this article: Vladislav Akhmatov *et al* 2018 *J. Phys.: Conf. Ser.* **1102** 012031

IOP Conf. Series: Journal of Physics: Conf. Series **1102** (2018) 012031 doi:10.1088/1742-6596/1102/1/012031

Reactive power and voltage control interaction and optimization in the Danish largest wind power plant at Kriegers Flak

Vladislav Akhmatov[1], Qiuwei Wu[2], Tibor Takarics[2]

[1] Energinet, Transmission System Operator of Denmark, Tonne Kjærsvej 65, 7000 Fredericia, Denmark
[2] Technical University of Denmark, Dept. of Electrical Engineering, Ørsted Plads, Building 348, 2800 Kgs. Lyngby, Denmark

Abstract. With the total 600MW power production capacity, Kriegers Flak will be the largest offshore wind power plant (OWPP) in Denmark. Kriegers Flak will utilize the two unequal sections, 400MW and 200MW, on the two offshore platforms interconnected via a 9 km 200kV cable and connected to the onshore substation via two 80 km 220kV cables. From the onshore 220kV substation, the 220kV connections continue to the two different 400/220kV substations of the Danish transmission grid. From the 400MW offshore platform, the connection continues to the 150kV offshore infrastructure of Germany. The Kriegers Flak grid connection resamples a meshed offshore grid (MOG) which increases complexity of and requirements to its overall voltage and reactive power control. This presentation describes how the overall voltage and reactive power control system is proposed and designed for optimized operation and reduction of the stress and efforts on the control equipment of the Kriegers Flak 220kV system.

1. Introduction

The Kriegers Flak 600MW offshore wind power plant (OWPP) will be among the largest electrical power generation units in Denmark East, which is the Danish transmission system being synchronous with the Nordic system and asynchronous with the Continental European system, see Fig. 1. Accounting for the wind turbines at Kriegers Flak, the nominal wind power capacity will correspond to 65% and 210% of the maximum and minimum consumption in Denmark East, respectively.

The Kriegers Flak grid-connection will be different from the already existing wind power plant grid-connection systems, see Fig. 2. The Kriegers Flak grid-connection will be a meshed 220kV cable network combining the two unequally sized offshore collection platforms, KFA with 200MW and KFB with 400MW, and feeding into the two different 400/220kV transformation substations in the Danish onshore transmission system [1], while all exiting OWPP connections are radial. The 220kV network becomes part of the meshed onshore transmission system of Denmark.

Through the 220/150kV transformation offshore platform, the connection will continue to the German offshore infrastructure and, then, to the German onshore transmission grid, while all existing connections do not have such interconnections [2]. The 220kV grid-connection system shall already be in operation by December 2018 due to utilization of the full Danish-German interconnector, and the 600MW wind power will be established by 2021.

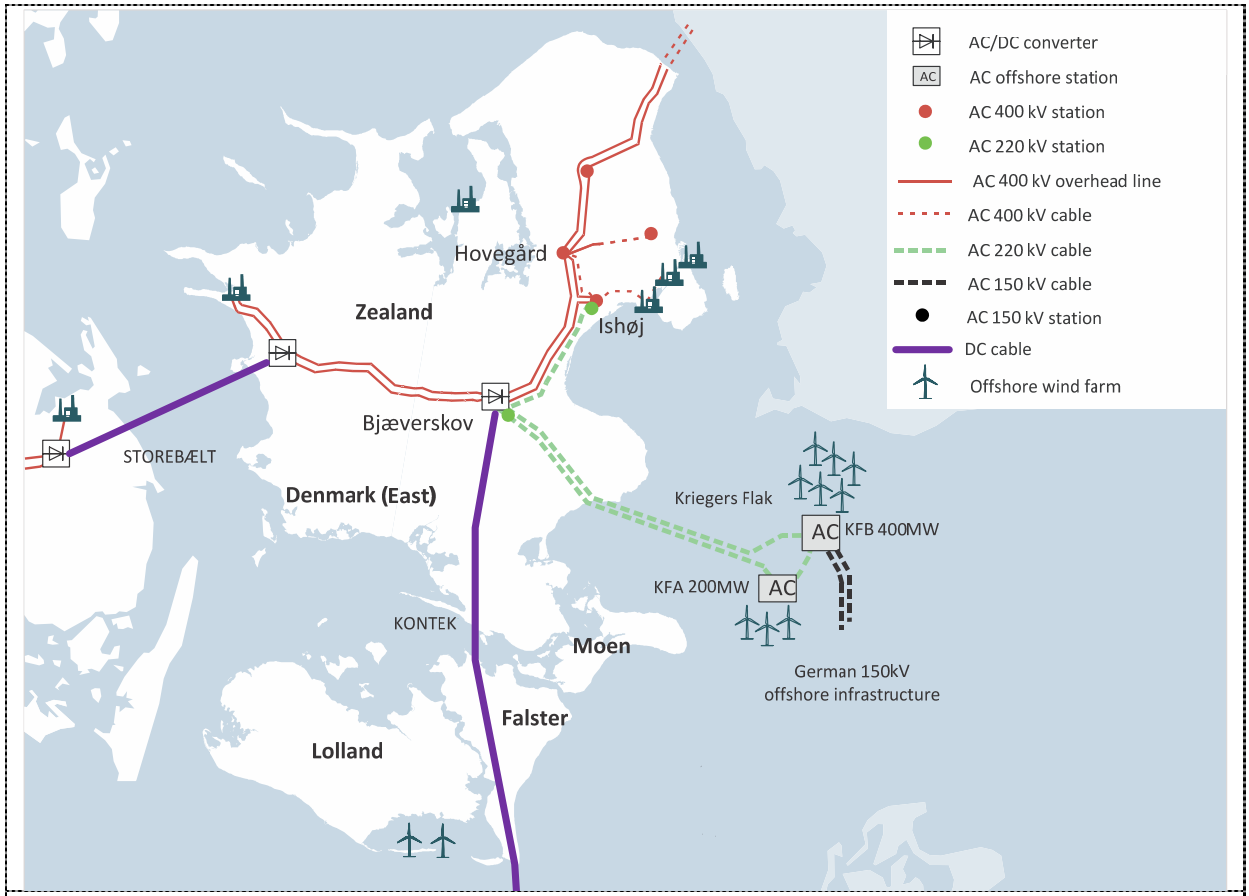

Figure 1. Grid-connection of Kriegers Flak 600 MW OWPP to Denmark.

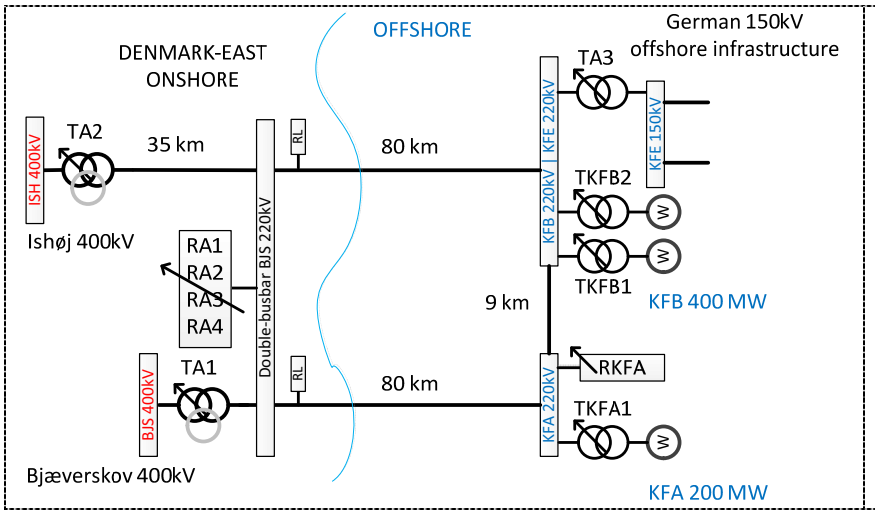

Figure 2. Meshed 220kV grid-connection and voltage and reactive power control equipment.

The Kriegers Flak grid-connection scheme will include the two 400/220/10kV onshore transformers TA1 and TA2, the 220kV switchable reactor RA2 (120 Mvar) and variable reactors RA1, RA3, and RA4, (each 60-120 Mvar) in the compensation substation BJS 220kV, the 220kV switchable reactor RKFA (120 Mvar) on the KFA platform, and the 220/150kV offshore transformer on the KFB/KFE platform. The two onshore transformers are with 500 MVA each and the offshore transformer is with 450 MVA power capacity. The 220/33kV offshore transformers TKFA1, TKFB1 and TKFB2 will be on the KFA and KFB platforms collecting the wind power production to the

220kV transmission system. The 220kV cable lengths (rounded up) will be ISH-BJS 35 km, KFB-BJS 80 km, KFA-BJS 80 km, KFA-KFB 9 km.

The technical complexity of the Kriegers Flak grid-connection system and variety of its operation regimes are ever seen [2], which includes the normal n-0 and numerous n-1 operation regimes and utilization of the dynamic line ratings of the 220kV cables in congested regimes. Furthermore, the active power may also direct from the onshore grid to the platforms due to the transport over the 220/150kV interconnection in low wind. Among numerous technical topics which are addressed to the Kriegers Flak grid-connection, this presentation deals with the voltage and reactive power control of the meshed 220kV grid and specifically to:

- Optimization of the reactive power and voltage control of the OWPP, such as possibility of the energy losses reduction in the OWPP 33kV collection networks.
- Utilization of the onshore voltage and reactive power control, such as possibility of the stepping and switching minimization of the 220kV compensation equipment.
- Yet unknown interaction dynamics with the 150kV offshore infrastructure over the 220/150kV transformation offshore substation.
- Proposals for overall coordination and optimization of the reactive power control using the wind power plant controllers (WPPC).

The proposal for coordination of the reactive power control will be presented by simulations.

2. Operation and control principles

The Danish Transmission System Operator (TSO) Energinet is establishing the Kriegers Flak grid-connection from the 33kV terminals of the 220/33kV transformation substations on the offshore platforms to the 400kV onshore substations. The OWPP operator will establish and connect the offshore wind turbines to the 33kV collection network, i.e. via the 33kV submarine cables, all the way to the 33kV terminals of the 220/33kV transformation substations.

In Denmark, the common practice has been that the OWPP point-of-settlements (POS) are the 33kV terminals [3]. This means that the delivery of the active power to the transmission grid and provision of the ancillary services, such as the voltage and reactive power control, are completed at the POS. The common practice has been that the offshore transformers are set in operation at fixed tap-positions securing the 33kV voltage delivery within a defined operation band from the transmission system to the OWPP collection network.

For the Kriegers Flak OWPP, the new common practice will be introduced. The tap-position control of the 220/33kV offshore transformers will be given to the OWPP operator. This means that the tap-position control shall lead to better operation and energy supply optimization from the wind turbines. In the new common practice, the voltage and reactive power control reference points may be moved from the POS at the 33kV terminals to the 220kV terminals on the offshore platforms. This control measure shall reduce variations in the voltage and reactive power interaction with the tap-position control of the transformers and reactors at the BJS 220kV onshore substation.

Since the 220/33kV offshore transformers remain property of Energinet and offshore maintenance efforts are expensive, the optimization goal shall be achieved at minimizing utilization of the tap-position shifts.

3. AVR/RPC system

Energinet establishes the Automatic Voltage Regulation / Reactive Power Control (AVR/RPC) system for coordinated voltage and reactive control within the Kriegers Flak 220kV network using the tap-changers of the TA1, TA2 and TA3 transformers and switches and tap-changers of the switchable and variable reactors RA1, RA2, RA3, RA4 and RKFA [1]. The AVR/RPC system will maintain the reactive power exchanges in the 400/220kV substations within defined bands, e.g. around 0 Mvar, and maintain the voltages on the offshore platforms within defined bands, e.g. around 235kV. The AVR/RPC system has been designed and tested by simulations for all expected operation regimes and power flow patterns of the Kriegers Flak [1].

The AVR/RPC system controls neither the tap-changers of the offshore transformers TKFA1, TKFB1, TKFB2, nor the WPPC of the KFA and KFB OWPP, see Fig. 3. This decision is made because the wind turbines will be commissioned few years after the grid-connection system with the Danish-German interconnector have been taken in operation and also for better redundancy of the vital voltage and reactive power control.

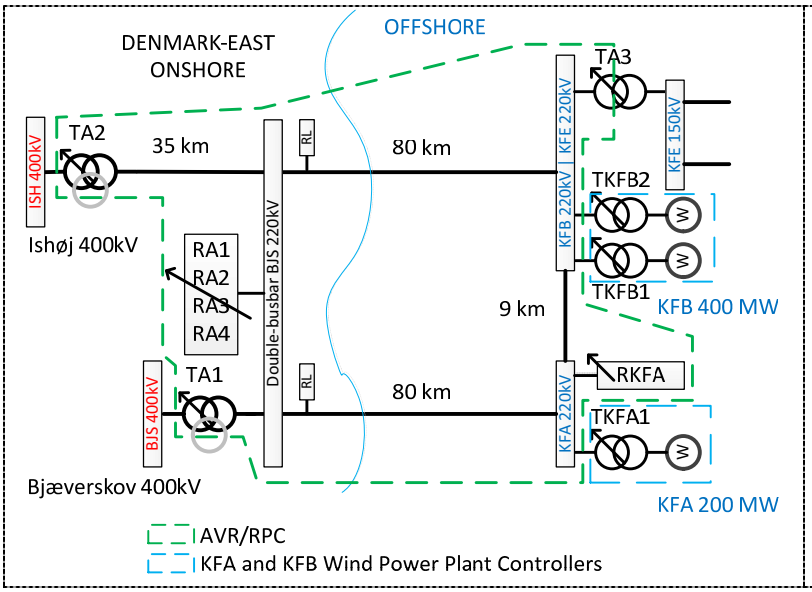

Figure 3. Areas of control: AVR/RPC of TSO and WPPC of the OWPP developer.

The AVR/RPC system and the tap-changers of the offshore transformers TKFA1, TKFB1 and TKFB2, will be influenced by several factors which are not present in the conventional wind power plant connection systems. There will be some active and reactive power transport over the 220/150kV transformation substation.

The static range of the reactive power via the 220/150kV transformation substation shall be maintained at ±40Mvar [2]. Thus, the reactive power exchange with the German 150kV offshore infrastructure may vary dynamically within 80Mvar. The initial studies of Energinet indicate a strong sensitivity of the reactive power transport from the operation conditions within the 150kV infrastructure, which practically speaking means a high risk of dynamically varying reactive power transport with a not yet known pattern.

Since the Kriegers Flak is also the Danish-German interconnector, the active power will be transported in both directions between the onshore grid and the offshore platforms. This influences the voltage profiles over the 220kV system. The voltage drop between the platforms and the onshore substation BJS 220kV will increase when the transport directed to the land and reduce or even reverse when directed to the platforms.

Combinations of the n-1 operation regimes and utilization of the dynamic line ratings may load the 220kV cables over their static line ratings and cause specific conditions where the cables deliver much less reactive power to the grid than in normal operation. In such loaded conditions the current is high and the cable reactance is consuming more of the reactive power generated by the cable capacitance. Thus, the AVR/RPC system will be forced to step down on the higher, small steps use the first, large steps of the tap-changers causing more abrupt control of voltage and reactive power [1].

With no other control available between the offshore platforms and the onshore grid, the dynamic reactive power imbalance and voltage fluctuations will be “absorbed” by the AVR/RPC system. This may increase the stepping and switching shifts within the controlled equipment. Energinet wishes to foresee and mitigate the causes of unnecessary activation of the AVR/RPC system.

4. Power and energy losses reduction

In cooperation with the Technical University of Denmark, Energinet has conducted a study on potential evaluation of the power and energy losses reduction in the 33kV cable network using the tap-changers of the 220/33kV offshore transformers [4]. The study has been based on the operation scenarios with different wind power production, superimposed by different active power and different reactive power transports via the 220/150kV offshore transformation substation, and superimposed by the OWPP optimization schemes.

This presentation deals with the part of the study where the connection regime is n-0 with all 220kV components are in operation. The two presented optimization schemes deal with the control of the 220/33kV transformer tap-changers:

- Not-optimized tap positions and 0Mvar at the POS 33kV terminals (the common practice).
- Optimized tap positions (the new practice for Kriegers Flak) and 0Mvar at the 220kV terminals.

The four wind power production scenarios which are 100% (high), 50% (medium), 5% (low) and Disconnected (none), multiplied by three active power transport scenarios which are Maximum Denmark→Germany, Maximum Germany→Denmark and No Transport, multiplied by the five reactive power flow scenarios which are -40Mvar, -20Mvar, 0Mvar, 20Mvar and 40Mvar positive from 150kV to 220kV system, and multiplied by the two optimization schemes become 120 main operation scenarios, which are included in this presentation. Attention shall be paid to the transport volatility of the wind power production. For example, the combination of the maximum Germany→Denmark transport and 100% wind means 0MW transport over the 220/150kV offshore transformation substation because of the 220kV system congestion on the Danish side. The same 100% wind and the opposite directed transport means 80MW Denmark→Germany transport over the 220/150kV offshore transformation substation because there is still available transport capacity through the 150kV infrastructure.

For the energy losses assessment, a model of the 33kV cable collection networks using the generic cable data has been included [4]. The 33kV generic cable data are: R=0.07 ohm/km, X=0.1 ohm/km, C=0.4 μF/km, i.e. a single, averaging cable type is applied to represent all cable types in the entire 33kV cable network. This consideration works sufficient and fine since the study does not include any multi-parameter 33kV cable network layout/routing optimization. The energy losses, the tap positions of the 220/33kV offshore transformers and those of the AVR/RPC components have been calculated for each main operation scenario.

The study has shown that utilization of the 220/33kV offshore transformers for the OWPP operation optimization (the new practice of Kriegers Flak) may reduce annual energy losses within the 33kV collection network by 10…15%. The potential losses reduction range is given in comparison to the scheme with no optimization (the common practice before Kriegers Flak).

The study has shown that the annual energy losses reduction is not sensitive to the reactive power transport over the 220/150kV offshore transformation substation. The result of the losses reduction is also less sensitive from the reactive power and voltage operation conditions in the 220kV system as far as the AVR/RPC maintains the 220kV system within the defined reactive power and voltage ranges.

The study has shown that the tap-position shifting of the 220/33kV offshore transformers slightly increases, while the switching and tap-position shifting of the equipment controlled by the AVR/RPC are less sensitive to the utilization of the 220/33kV offshore transformers for OWPP optimization. On the other hand, the switching and tap-position shifting of all equipment are very sensitive to the reactive power transport through the 220/150kV offshore transformation substation.

5. Overall reactive power control optimization

The overall reactive power control optimization includes the AVR/RPC system, the 220/33kV offshore transformers with their tap-changers, and the WPPCs. The optimization targets outbalancing of the reactive power exchanges via the 220/150kV offshore transformation substation and minimizing of the AVR/RPC activation by implementation of a superior control and utilization of all available control within the 220kV network of Kriegers Flak.

5.1. Wind Power Plant Controllers

The two KFA and KFB windfarm sections shall be established with the two individual WPPCs in order to deliver the required and agreed ancillary services to the grid. The model structure of the WPPC of the KFB section is illustrated in Fig. 4. The WPPC receives the measurements from the 33kV and 220kV terminals of the offshore substation and the available wind power measurement from the wind model, calculates and distributes order signals to the individual wind turbine generator models. The order signals to the wind turbine generators include the active power as well as the individual reactive power or voltage signals.

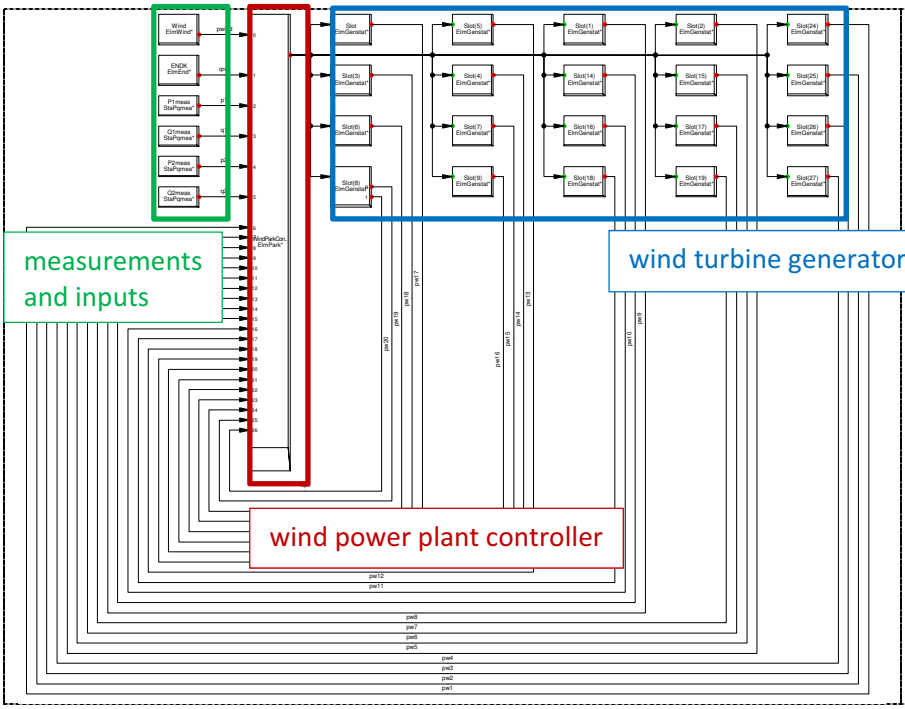

Figure 4. Model structure of WPPC of the KFB wind farm section.

In this modelling structure, all wind turbine generators are always available and in operation. All wind turbine generators receive the same active power and voltage order signals from the WPPC model and deliver the same response in the means of active power and voltage to their 33kV terminals. This approach is seen in the model implementation in Fig. 4. In this approach, all wind turbine generators send their measurements to the WPPC, but only a single wind turbine generator sends the control feedback to the WPPC, see Fig. 4. This modelling reduction is sufficient because all wind turbines shall, in this approach, have the same control feedback. If another approach were used in which some wind turbines were out of operation or should have different operation conditions, then all wind turbine generators should also have individual control feedbacks sent to the WPPC.

5.2. 220/33kV transformer control

The tap-changer control of the 220/33kV offshore transformers is implemented for securing the operation voltage around the optimized reference voltage at the 33kV terminals. The tap-changer control is independent from the AVR/RPC control.

5.3. Proposed superior control

The target of the proposed superior control of Kriegers Flak is illustrated in Fig. 6. With no superior control, the reactive power exchange via the 220/150kV offshore transformation substation will directly interact with the AVR/RPC and its equipment behind the BJS 220kV substation. Further, this reactive power exchange will influence the voltages on the KFA and KFB platforms activating the tap-changer controllers of the 220/33kV offshore transformers.

Establishment and utilization of the superior control shall activate the WPPCs of the KFA and KFB wind farms absorbing some of the reactive power imbalance from the 150kV offshore infrastructure, see Fig. 5, which reduces the switching and tap-position shifting of the AVR/RPC control equipment, and adjusting the 33kV voltages, which minimizes the tap-changing of the 220/33kV offshore transformers.

The proposed superior control is shown in Fig. 6. The characteristic time of the AVR/RPC is in a range of tens of seconds. Therefore, the characteristic time of the superior control shall be in a range of several seconds in order to prevent unnecessary activation of the AVR/RPC equipment. Considering the characteristic time, the proposed superior control shall be an automatic control, and not manually-interfaced.

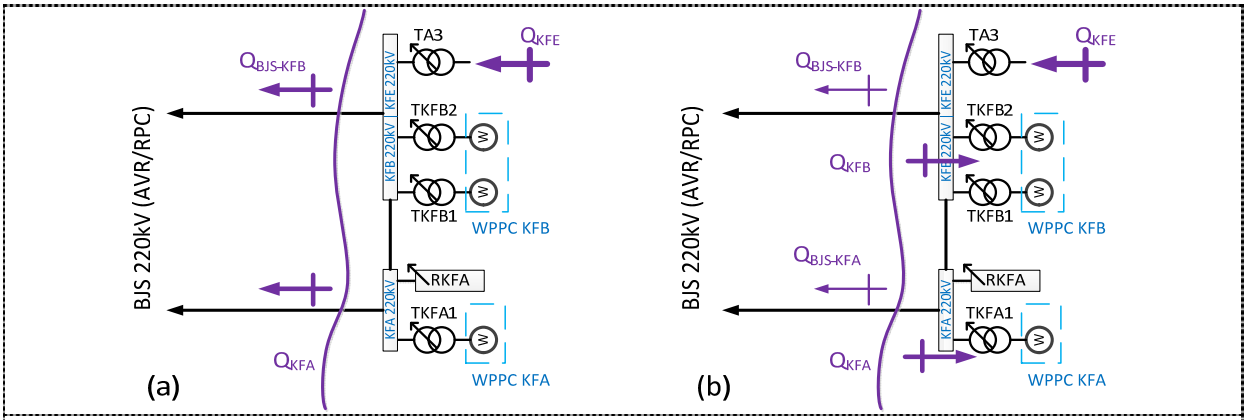

Figure 5. Reactive power flow between the 220/150kV offshore substation and the BJS 220kV substation (AVR/RPC equipment): (a) – no superior control, (b) – proposed superior control.

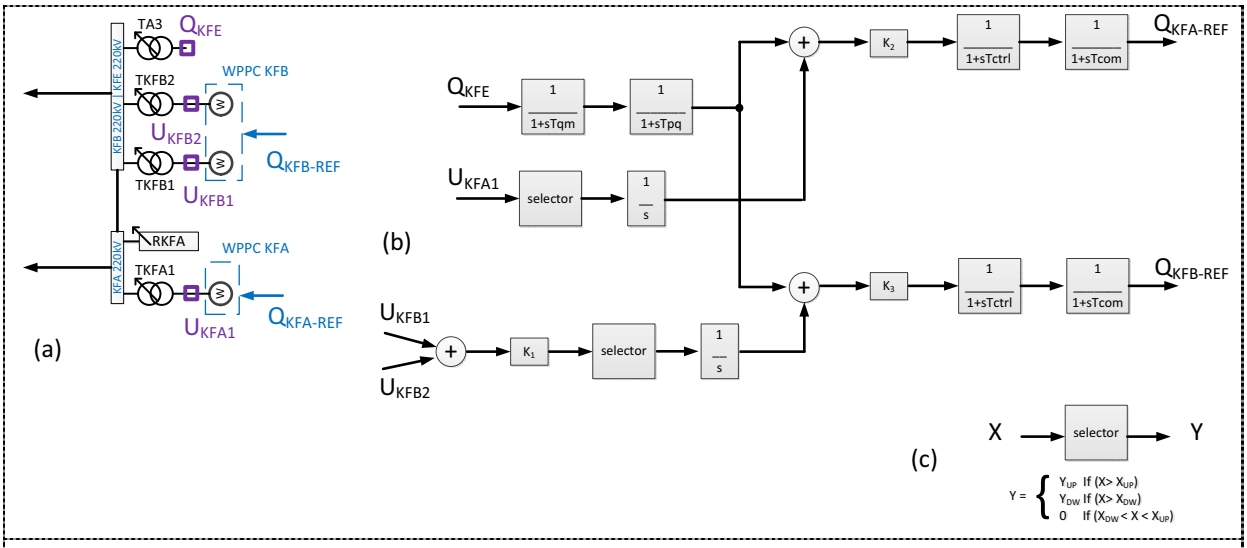

Figure 6. Proposed superior control (a) –measurements, (b) –main block-diagram, (c) –selector.

In this presentation, the input signals are the measurements of the voltages U_{KFA1}, U_{KFB1}, and U_{KFB2}, and the measurement of the reactive power Q_{KFE}. The output signals are the reactive power references to the WPPCs of the KFA windfarm, $Q_{KFA\text{-}REF}$, and the KFB windfarm, $Q_{KFB\text{-}REF}$. The gain K_1 =½ because of the two available voltage measurements, U_{KFB1} and U_{KFB2} at the two 33kV terminals of the 220/33kV offshore transformers. The gains K_2 =0.333 and K_3 =0.667 representing the 200 MW and 400 MW power capacities of the KFA and KFB windfarms in relation to the total 600 MW power capacity of both WPPC control systems. The time constants are T_{QM} =0.1 s, T_{PQ} =0.1 s and T_{COM} =0.1 s, and the control time is T_{CTRL} =2.5 s. The selectors and integrators are securing that the proposed

superior control stabilizes the 33kV voltages and, then, does not trigger excessive activation of the tap-changers of the 220/33kV offshore transformers.

Attention is paid to that the proposed superior control, as shown in Fig. 6, does not include the necessary measures of redundancy, such as replacement of an invalid measurement, lost communication and equipment outage. Such measures shall always be part of the implementation.

5.4. Simulation example

The presented simulation example includes the three operation scenarios. The three scenarios are with the same wind power production and the same active power transport via the 220/150kV offshore transformation substation, which are shown in Fig. 7. The difference between the three operation scenarios is:

- Scenario 1: The reactive power exchange via the 220/150kV offshore transformation substation is 0Mvar, and no superior control is applied.
- Scenario 2: The reactive power exchange varies dynamically within +/-40Mvar, which is shown in Fig. 8, and no superior control is applied.
- Scenario 3: The reactive power exchange varies dynamically within +/-40Mvar, as shown in Fig. 8, and the proposed superior control, as shown in Fig. 6, is included.

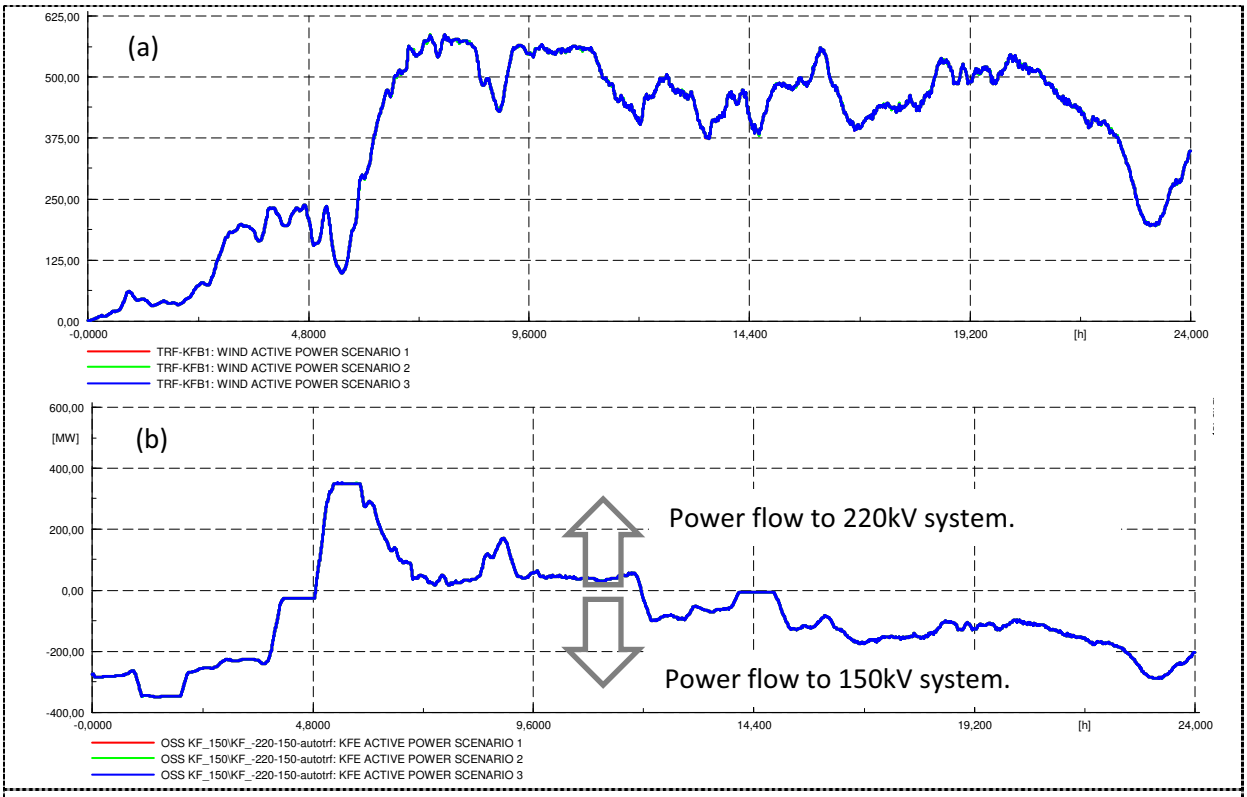

Figure 7. Active power in MW over 24 hours (the same for the three scenarios): (a) – wind power production at Kriegers Flak, (b) – transport over the 220/150kV offshore transformation substation.

Attention is paid to that the magnitude and characteristic time of the reactive power variations are not yet known and to be determined when the Kriegers Flak interconnector will be brought in operation. Therefore, the two scenarios with the reactive power variations over the 220/150kV offshore transformation substation are generated as periodical in this simulation example. The response of the AVR/RPC system is presented in Fig. 9 for the scenario 1, in Fig. 10 for the scenario 2, and in Fig. 11 for the scenario 3.

The AVR/RPC system response in Fig. 9 is due to the varying active power flow with corresponding variations of the reactive power and voltage within the 220kV system. Introduction of

the varying reactive power flows, and with no control countermeasures, leads to excessive activation of the AVR/RPC equipment and also to the tap-changers of the 220/33kV offshore transformers, see Fig. 10. This response may call for more frequent maintenance periods of the equipment and, for the offshore and onshore transformers, for the power delivery congestion. Especially, increased maintenance needs of the offshore transformers may cause additional loss to all involved parties.

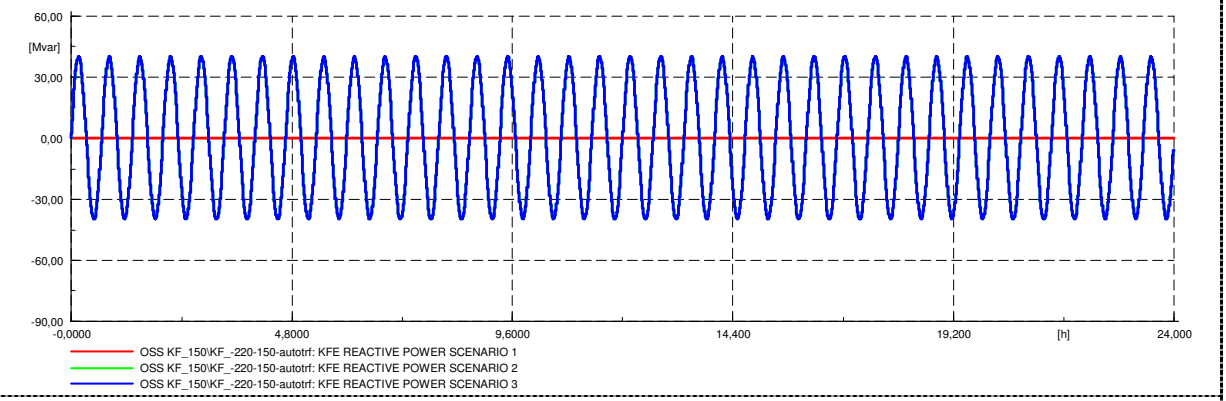

Figure 8. Reactive power in Mvar over 24 hours over the 220/150kV offshore transformation substation: 0Mvar for scenario 1 and dynamically varying within +/-40Mvar for scenarios 2 and 3.

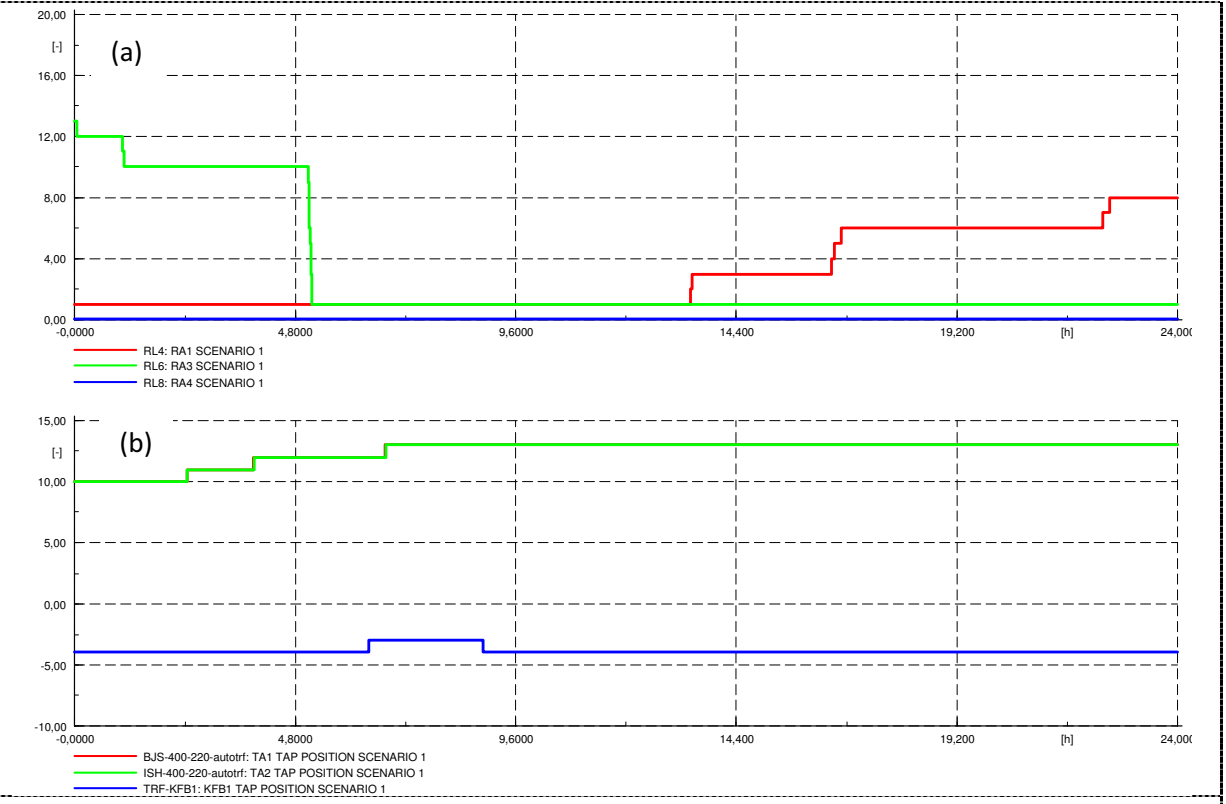

Figure 9. Scenario 1 response of the control equipment tap-positions: (a) –reactors, (b) –transformers.

Utilization of the proposed superior control, which results are shown in Fig. 11, may significantly reduce activation of the control equipment. The proposed superior control seems very promising for relaxing of the AVR/RPC control efforts and for activation of the tap-changers of the 220/33kV offshore transformers.

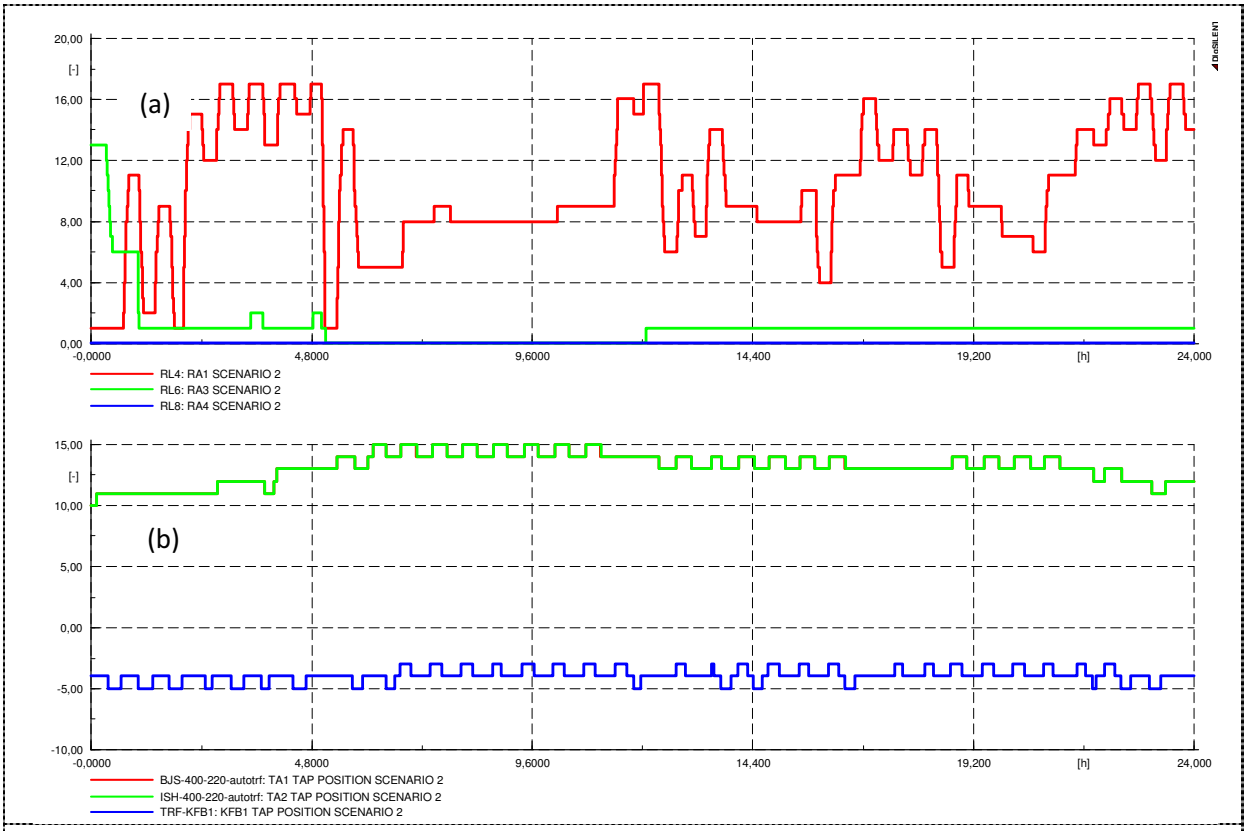

Figure 10. Scenario 2 response of the control equipment tap-positions: (a) –reactors, (b) –transformers.

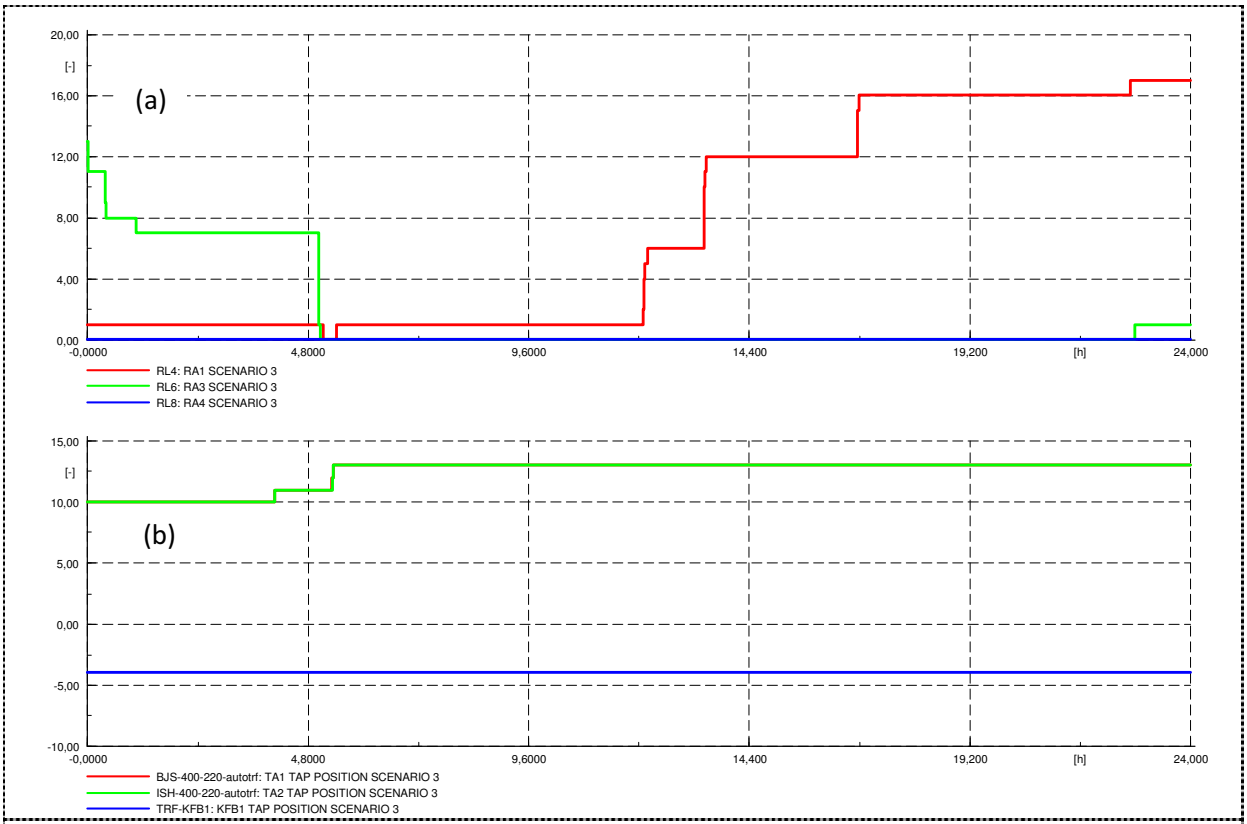

Figure 11. Scenario 3 response of the control equipment tap-positions: (a) –reactors, (b) –transformers.

6. Conclusion

The Kriegers Flak OWPP grid-connection will utilize the meshed 220kV cable system and include an interconnector to the German 150kV offshore infrastructure via the 220/150kV offshore transformation substation. The voltage and reactive power control within the 220kV system will primarily be conducted by the AVR/RPC system with coordinated control of the switchable and variable 220kV reactors and the tap-changers of the 400/220/10kV onshore transformers and the 200/150kV offshore transformer.

Further, the new practice of Kriegers Flak will be utilization of the tap-charger control of the 220/33kV offshore transformers for optimized operation of the 33kV collection cable networks. The study has shown that the tap-changer control may significantly reduce the power and energy losses in the 33kV networks practically without increase of the AVR/RPC activation.

On the other hand, excessive usage of the AVR/RPC equipment and the tap-changers of the 220/33kV transformers can be excited due to dynamic variations of the reactive power exchange via the 220/150kV offshore transformation substation. The study has shown that inclusion of the superior control may reduce such negative influences and remove stress on the AVR/RPC equipment and the tap-changers of the 220/33kV offshore transformers. The proposed superior control includes the WPPCs in the overall voltage and reactive power control scheme, which compensates for unwished reactive power exchanges and stabilizes the operation voltage in the 33kV collection cable networks. The study has shown a significant reduction in the control equipment usage and stress when the proposed superior control has been activated.

7. References

[1] V. Akhmatov, ”Automatic Voltage and Reactive Power Control of Kriegers Flak Offshore Wind Power Plant Grid-Connection System”, Offshore Wind conference 2017, PO-0255, London, UK, June 6-8 2017. 10 p.

[2] A. K. Marten et al.,” Kriegers Flak – Combined Grid Solution: Coordinated Cross-Border Control of a Meshed HVAC/HVDC Offshore Wind Power Grid”, IET Renewable Power Generation DOI: 10.1049/iet-rpg.2017.0792, Online ISSN 1752-1424 Available online: 19 February 2018.

[3] “Technical regulation 3.2.5 for wind power plants above 11 kW”. Energinet Transmission System Operator of Denmark. Published UK edition. 22.07.2016.

[4] T. Takarics, “Voltage Control Optimization by using the Wind Power Plant Controllers at Kriegers Flak AC”, Technical University of Denmark, Dept. of Electrical Engineering, Dec. 2017, 16.p.