Downloaded from orbit.dtu.dk on: Apr 24, 2024

DTU Library

Constellation multiplexing and non-orthogonal multiple access based on carrierless amplitude phase modulation

Altabas Navarro, Jose Antonio ; Tafur Monroy, Idelfonso ; Rommel, Simon; Puerta Ramírez, Rafael; Vegas Olmos, Juan José; Izquierdo Nuñez, David ; Gregorio, Juan Ignacio Garces ; Lazaro Villa, Jose Antonio

Publication date:
2018

Document Version
Publisher's PDF, also known as Version of record

Link back to DTU Orbit

Citation (APA):
Altabas Navarro, J. A., Tafur Monroy, I., Rommel, S., Puerta Ramírez, R., Vegas Olmos, J. J., Izquierdo Nuñez, D., Gregorio, J. I. G., & Lazaro Villa, J. A. (2018). Constellation multiplexing and non-orthogonal multiple access based on carrierless amplitude phase modulation. (Patent No. *WO2018138254*).

General rights
Copyright and moral rights for the publications made accessible in the public portal are retained by the authors and/or other copyright owners and it is a condition of accessing publications that users recognise and abide by the legal requirements associated with these rights.

- Users may download and print one copy of any publication from the public portal for the purpose of private study or research.
- You may not further distribute the material or use it for any profit-making activity or commercial gain
- You may freely distribute the URL identifying the publication in the public portal

If you believe that this document breaches copyright please contact us providing details, and we will remove access to the work immediately and investigate your claim.

(12) INTERNATIONAL APPLICATION PUBLISHED UNDER THE PATENT COOPERATION TREATY (PCT)

(19) World Intellectual Property Organization
International Bureau

(43) International Publication Date
02 August 2018 (02.08.2018)

WIPO | PCT

(10) International Publication Number
WO 2018/138254 A1

(51) International Patent Classification:
H04L 5/00 (2006.01) *H04L 27/34* (2006.01)
H04L 25/49 (2006.01)

(21) International Application Number:
PCT/EP2018/051947

(22) International Filing Date:
26 January 2018 (26.01.2018)

(25) Filing Language: English

(26) Publication Language: English

(30) Priority Data:
17153537.0 27 January 2017 (27.01.2017) EP

(71) Applicants: **DANMARKS TEKNISKE UNIVERSITET** [DK/DK]; Anker Engelunds Vej 101 A, 2800 Kgs. Lyngby (DK). **UNIVERSITY OF ZARAGOZA** [ES/ES]; Pedro Cerbuna 12, 50009 Zaragoza (ES). **UNIVERSITAT POLITÈCNICA DE CATALUNYA** [ES/ES]; Campus Nord, Calle Jordi Girona 31, 08034 Barcelona (ES). **CENTRO UNIVERSITARIO DE LA DEFENSA** [ES/ES]; Carr. de Huesca, s/n, 50090 Zaragoza (ES).

(72) Inventors: **ALTABAS NAVARRO, Jose, Antonio**; c/ Santa María Magdalena 29, 50693 Torres de Berrellen (ES). **TAFUR MONROY, Idelfonso**; Lundtofteparken 4, 2th, 2800 Kgs. Lyngby (DK). **ROMMEL, Simon**; Skjoldagervej 72, 1mf, 2820 Gentofte (DK). **PUERTA, Rafael**; Brogårdsvej 104, st.th., 2820 Gentofte (DK). **VEGAS OLMOS, Juan, José**; Søborg Hovedgade 67A, 3.2, 2860 Søborg (DK). **IZQUIERDO NUÑEZ, David**; Av. Madrid 24, 9°, 50010 Zaragoza (DK). **GARCES GREGORIO, Juan, Ignacio**; Duquesa Villahermosa 121 7A, 50009 Zaragoza (DK). **LAZARO VILLA, Jose, Antonio**; c/ Mallorca 603, 5°, 1A, 08026 Barcelona (DK).

(74) Agent: **HØIBERG P/S**; Adelgade 12, 1304 Copenhagen K (DK).

(81) Designated States *(unless otherwise indicated, for every kind of national protection available)*: AE, AG, AL, AM,

(54) Title: CONSTELLATION MULTIPLEXING AND NON-ORTHOGONAL MULTIPLE ACCESS BASED ON CARRIERLESS AMPLITUDE PHASE MODULATION

FIG. 10

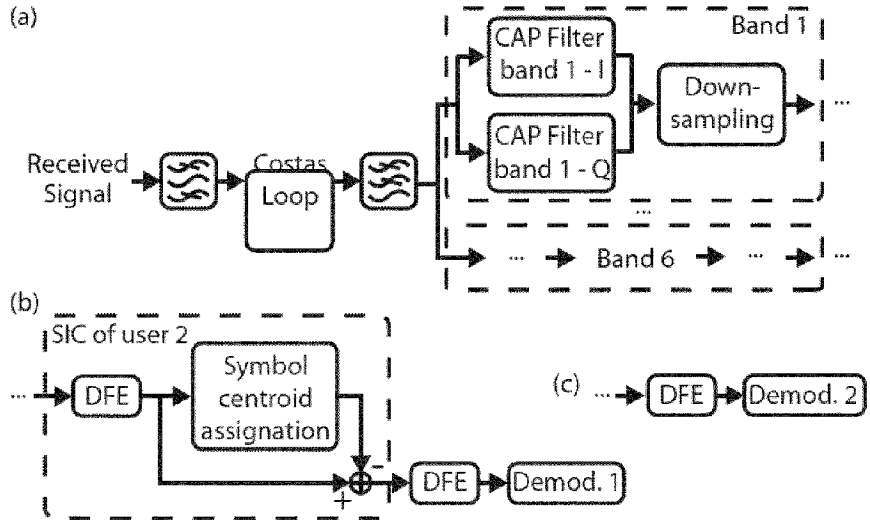

FIG. 11

(57) Abstract: The present disclosure relates to a receiver configured to receive a carrierless amplitude and phase (CAP) modulated signal, wherein the signal has been further multiplexed in a power domain, said receiver being configured to: demodulate the received carrierless amplitude and phase (CAP) modulated signal; and further demultiplex the signal in the power domain by applying successive interference cancellation (SIC). The disclosure further relates to a corresponding transmitter configured to: modulate a signal by applying carrierless amplitude and phase modulation (CAP); multiplex the signal in a power domain; and transmit the carrierless amplitude and phase modulated, frequency multiplexed and power multiplexed signal.

WO 2018/138254 A1

[Continued on next page]

AO, AT, AU, AZ, BA, BB, BG, BH, BN, BR, BW, BY, BZ, CA, CH, CL, CN, CO, CR, CU, CZ, DE, DJ, DK, DM, DO, DZ, EC, EE, EG, ES, FI, GB, GD, GE, GH, GM, GT, HN, HR, HU, ID, IL, IN, IR, IS, JO, JP, KE, KG, KH, KN, KP, KR, KW, KZ, LA, LC, LK, LR, LS, LU, LY, MA, MD, ME, MG, MK, MN, MW, MX, MY, MZ, NA, NG, NI, NO, NZ, OM, PA, PE, PG, PH, PL, PT, QA, RO, RS, RU, RW, SA, SC, SD, SE, SG, SK, SL, SM, ST, SV, SY, TH, TJ, TM, TN, TR, TT, TZ, UA, UG, US, UZ, VC, VN, ZA, ZM, ZW.

(84) Designated States *(unless otherwise indicated, for every kind of regional protection available)*: ARIPO (BW, GH, GM, KE, LR, LS, MW, MZ, NA, RW, SD, SL, ST, SZ, TZ, UG, ZM, ZW), Eurasian (AM, AZ, BY, KG, KZ, RU, TJ, TM), European (AL, AT, BE, BG, CH, CY, CZ, DE, DK, EE, ES, FI, FR, GB, GR, HR, HU, IE, IS, IT, LT, LU, LV, MC, MK, MT, NL, NO, PL, PT, RO, RS, SE, SI, SK, SM, TR), OAPI (BF, BJ, CF, CG, CI, CM, GA, GN, GQ, GW, KM, ML, MR, NE, SN, TD, TG).

Declarations under Rule 4.17:

— *of inventorship (Rule 4.17(iv))*

Published:

— *with international search report (Art. 21(3))*

Constellation multiplexing and non-orthogonal multiple access based on carrierless amplitude phase modulation

The present disclosure relates to a solution for increasing the capacity of wired and wireless communication by involving a combination of carrierless amplitude phase modulation and non-orthogonal multiple access.

Background of invention

The introduction of mm-wave frequencies to mobile communications of the 5th generation requires a re-design of front- and backhaul architectures for radio access networks (RANs) that supports the high data rates, environments with heterogeneous user densities and flexible resource provisioning. The use of centralized radio access networks (C-RANs) is suggested as a key enabler and with radio-over-fiber (RoF) on passive optical networks (PON) it is a promising candidate to flexibly support 5G mobile networks.

In RANs, the design of the access to the medium is a key technology in order to improve the system capacity and to dynamically allocate the available resources. Non-orthogonal multiple access (NOMA) has been proposed as a promising access scheme for LTE and 5G enhancements. In this scheme multiple users are multiplexed in the power domain at the transmitter side and multi-user signal separation is conducted at the receiver side. In order to demultiplex the different users, Successive Interference Cancellation (SIC) is implemented at the receiver side. The technique can be said to exploit asymmetrical channel gains between the users. The NOMA power multiplexing is applied at the constellation level, as is shown in Fig. 1. The different user's constellations are weighted in order to obtain the desired power relation between users and then they are added. Later, pulse shaping can be applied over the NOMA symbol signal. The users who are for example placed close to the base station (BS), i.e. with a high quality received multiplexed signal, will have assigned a low power signal and will implement the SIC to remove the high power signals, as can be seen in Fig. 2. The users who are placed far of the BS, i.e. with a low quality received signal, will have assigned the high power multiplexed signals and they will only decode its own signal.

Carrierless amplitude phase modulation (CAP) is a specific variant of quadrature amplitude modulation (QAM). Instead of modulating the amplitude of two carrier waves,

CAP generates a QAM signal by combining two pulse amplitude modulated (PAM) signals filtered through two filters. CAP is similar to QAM in its ability to transmit two streams of data in parallel. However, it does not rely on a carrier but uses filters with orthogonal waveforms to separate the different data streams. One advantage of CAP over QAM is simpler implementation.

Both CAP and NOMA are used to address the issue of multiplexing users to make efficient use of the available spectrum, however both involve summing of parallel signals in amplitude and were therefore, until now, theoretically, not expected to be combined.

Summary of invention

The presently disclosed receiver, transmitter and system proposes a combination of NOMA and CAP in order to allow flexible resource provisioning that addresses the dynamic nature of user density and capacity demands. By combining CAP and NOMA schemes, the traditional practice of using separate degrees of freedom when combining methods of multiplexing is broken. A first aspect of the presently disclosed invention relates to a transmitter configured to: modulate a signal by applying carrierless amplitude and phase modulation (CAP); multiplex the signal in a power domain; and transmit the carrierless amplitude and phase modulated- and power multiplexed signal. The transmitter is functional in any sequential order, which means that both the sequence of first multiplexing and then applying CAP or first applying CAP and then multiplexing are functional. Both provide a signal that can be decoded. The present application provides an example wherein power multiplexing is applied in a first step and CAP in a second step. A person skilled in the art would understand that any order is functional.

A second aspect of the presently disclosed invention relates to a corresponding receiver, configured to receive a carrierless amplitude and phase (CAP) modulated signal, wherein the signal has been further multiplexed in a power domain, said receiver being configured to: demodulate the received carrierless amplitude and phase (CAP) modulated signal; and further demultiplex the signal in the power domain by applying successive interference cancellation (SIC).

The receiver and transmitter may be part of a system comprising both the receiver and the transmitter.

In one embodiment the CAP signal is divided into smaller subbands, which may be referred to as multiband CAP (multiCAP). In multiband CAP the idea is to break the signal into independent subbands occupying different frequency bands. Thereby, the modulation order and signal power can be tailored to the SNR in each subband. CAP may be sensitive to non-flat spectral channels and require complex equalizers the modulation scheme never gained wide popularity in the development of telecommunication. Multiband CAP can solve this issue. CAP is a bandwidth-efficient two-dimensional passband line code derived from QAM. Since CAP can be seen as passband strictly, multiband CAP is achievable and suitable for this purpose. Multiband CAP achieves the generation of bands through the use of frequency shifted orthogonal pulse shapers on I and Q components and their subsequent addition in amplitude. The inventors of the presently disclosed receiver, transmitter and system for communication have realized that by combining multiband CAP and NOMA schemes, the traditional practice of using separate degrees of freedom when combining methods of multiplexing may be broken, but, since CAP, which involves filtered pulse shape, allows close placement of the bands, the combination is useful since it, despite the fact that both schemes are based on addition in amplitude, also allows an efficient simultaneous multiplexing in power and frequency domain.

By combining NOMA and multiband CAP the inventors have achieved an additional degree of multiplexing, thereby increasing the overall effective capacity of the system by adapting to the conditions and number of users more efficiently. The use of multiband CAP gains flexibility and enables user multiplexing both in bands and by NOMA. The inventors have realized that CAP is suitable for such a multiband approach due to its inherently filtered pulse shape which allows close placement of the bands in contrast to other modulation schemes.

Description of drawings

Fig. 1 shows the concept of NOMA, wherein power multiplexing is applied at the constellation level. The different user's constellations are weighted in order to obtain the desired power relation between users and then they are added.

Fig. 2 shows how SIC is applied to demultiplex the different user at the receiver side. The users who are, for example, placed close to a base station (BS), i.e. with a high quality received multiplexed signal, will have assigned a low power signal and will implement the SIC to remove the high power signals.

Fig. 3 shows NOMA-CAP scenarios with different user densities.

Fig. 4 shows two examples of multiband CAP and NOMA applying user multiplexing in the power and frequency domain.

Fig. 5 shows an example of NOMA-CAP with multiCAP band separation and SIC receivers. Several NOMA users are multiplexed and the SIC process is applied iteratively after multiCAP demultiplexing.

Fig. 6 shows an example of an application, a wired access network, in which the signal is divided between several users using a power splitter. Each optical network unit then demultiplexes the assigned channel.

Fig. 7 shows an optical (wired) metro-access network, where the signal crosses Reconfigurable Optical Add/Drop Multiplexers (ROADM).

Fig. 8 shows wireless system applying the combined multiband CAP and NOMA concept.

Fig. 9 shows a schematic of an experimental setup, wherein three stations (optical signal generation, optical to radio frequency conversion, wireless receiver and signal processing) are linked by fiber and wireless transmission.

Fig. 10 shows an example of a transmitter DSP block diagram for NOMA-CAP signal generation.

Fig. 11 shows an example of a receiver DSP block diagram for NOMA-CAP.

Detailed description of the invention

In a first embodiment the invention relates to a receiver, configured to receive a carrierless amplitude and phase (CAP) modulated signal, wherein the signal has been further multiplexed in a power domain, said receiver being configured to: demodulate the received carrierless amplitude and phase (CAP) modulated signal; and further demultiplex the signal in the power domain by applying successive interference cancellation (SIC). In one embodiment the signal has been further divided into subbands, and the receiver is then configured to demodulate the received carrierless amplitude and phase modulated signal for each subband. With an adequate number of sub-bands, non-flat frequency responses (e.g. uneven antenna gain or non-flat frequency response of devices) can be alleviated to maximize spectral efficiency. The receiver may therefore be a combined multiband CAP and non-orthogonal multiple access (NOMA) receiver. The corresponding transmitter may be a combined multiband CAP and non-orthogonal multiple access (NOMA) transmitter.

In one embodiment the received signal is non-orthogonally multiplexed. Successive interference cancellation (SIC) is employed in the terminal units in NOMA in order to recover the contributing signals and thus demultiplex the NOMA users. In wireless communications this technique may exploit the near-far effect, causing asymmetrical channel gains between the users. Therefore, the receiver side may further comprise a successive interference cancellation (SIC) receiver for separating the non-orthogonally multiplexed signal.

NOMA power multiplexing may be combined with multiCAP modulation to enhance the capacity and flexibility of the RAN. System capacity can be said to be increased by reaping the benefits of multiCAP, optimizing the signal to channel condition, while both multiCAP and NOMA lend themselves ideally to flexible and adaptive user provisioning.

In one embodiment the frequency ranges of the subbands and power bands are dynamically adaptable. The receiver and transmitter may thereby use frequency and power band configurations, wherein the receiver is configured to demodulate the received carrierless amplitude and phase modulated signal; and further demultiplex the signal in the power domain by applying successive interference cancellation based on the frequency configurations and power band configurations. This applies both for the receiver and transmitter side. The combination of NOMA and multiCAP allows a dynamic assignment of the resources to accomplish the user demands. For example, in a low density user distribution scenario, such as shown in Fig. 4A, the users can use all multiCAP bands simultaneously while their data is multiplexed by NOMA. In this scenario, the users equally share the maximum capacity available of the RAN. If the number of users increases, NOMA multiplexing can be applied independently to each multiCAP band (with potentially different numbers of users per band) and bands can be assigned to different groups of users, as shown in Fig. 4B. This enables flexibly sharing RAN capacity over many users and avoids blocking new users to a large degree.

The receiver may be configured to receive a CAP impulse comprising an in-phase signal component and a quadrature signal component and determine the amplitudes of the components. The transmitter may accordingly be configured to generate a CAP impulse comprising an in-phase signal component and a quadrature signal component, wherein each of the components has a predefined amplitude level. CAP is a scheme that, like quadrature amplitude modulation (QAM), transmits two streams of data separately by means of two orthogonal signals, namely the in-phase (I) and quadrature

(Q) components. Additionally, a special feature of CAP modulation is the use of a pulse shaping function to significantly improve the spectral efficiency of the system. Unlike QAM, the generation of the CAP signal is not achieved by modulating two orthogonal carriers with the same frequency (i.e. sine and cosine). Instead two orthogonal filters are used to generate the two components of the signal. These filters are the result of the time-domain multiplication of the pulse shaping function and two orthogonal carriers. In one embodiment of the receiver the CAP modulated signal is phase sensitive and amplitude sensitive.

On the transmitter side the non-orthogonal multiple access multiplexing may be applied at constellation level for each subband independently. The subbands may be independent subbands. The transmitter may furthermore be configured to frequency multiplex the signal into subbands occupying different frequency bands. At the transmitter NOMA power multiplexing may be applied at the constellation level for each multiCAP band independently and before generation of the multiCAP signal. NOMA-CAP reception may require the extraction of each multiCAP band – employing its matched filters – and then the SIC process to extract the signal of interest. If several NOMA users have been multiplexed, the SIC process will be applied iteratively after multiCAP demultiplexing until the user signal of interest is demodulated, as is shown in Fig. 5.

The carrierless amplitude and phase modulation of the frequency-multiplexed signal may be adapted to a signal-to-noise ratio for each subband. In one embodiment the allocation of power domains to the users are based on signal qualities of individual users. Alternatively, or in combination, the carrierless amplitude and phase modulation of the frequency-multiplexed signal may be adapted to impairments associated with the individual subbands, such as frequency multipath fading. By splitting the spectrum into subbands, multiCAP modulation enables the use of bit- and power-loading techniques for each band independently, according to its signal to noise ratio (SNR). Thus, with an adequate number of sub-bands, non-flat frequency responses (e.g. uneven antenna gain or non-flat frequency response of devices) can be alleviated to maximize spectral efficiency.

In one embodiment the multiplexing of the signal in a power domain comprises modulation of the signal with two or more low order constellations simultaneously.

The NOMA power multiplexing technique multiplexes the data of several users in the power domain by additively combining the contributing signals and allows combination with time- or frequency multiplexing. Therefore, in one embodiment the multiplexing of the signal in a power domain corresponds to allocating different power domains to different users.

Optical wavelengths

There are a number of wavelength ranges for fiber-optic communication and free space optics (FSO). Broadly, optical fiber communications typically operate in a wavelength region of approximately 800-1800 nm while FSO operates in a wavelength region of approximately 350-1000 nm. In optical fibers, the loss comes from a combination of Rayleigh scattering, oxygen absorption and the fundamental absorption of the silica material. Optical fiber communications typically operate in a wavelength region corresponding to one of the following windows:

- First window - 800-900 nm. Losses are high in this region so this window is used primarily for short-distance communications.
- Second window – approximately 1300 nm, where the loss of silica fibers is lower and the fibers' chromatic dispersion is very weak. Low dispersion is not necessarily ideal for long-haul dispersion.
- Third window utilizes wavelengths around 1500 nm. The losses of silica fibers are lowest in this region, and erbium-doped fiber amplifiers are available which offer very high performance.

The second and third windows are further divided into the wavelength bands of Table 1.

Band	Description	Wavelength range
O	Original	1260-1360 nm
E	Extended	1360-1460 nm
S	Short wavelengths	1460-1530 nm
C	Conventional (erbium window)	1530-1565 nm
L	Long wavelengths	1565-1625 nm
U	Ultralong wavelengths	1625-1675 nm

Table 1

Wireless carrier frequencies

Wireless networks operate on different frequency bands. Frequencies used for LTE range support a number of frequency bands, typically allocated to FDD and TDD bands. The LTE standard specifies transmission frequencies starting at approximately 700 MHz and covers frequencies up to approximately 4000 MHz.

The 5G spectrum is expected to cover a wide range of higher frequencies including frequencies above 6 GHz. In order to support various use cases lower frequency bands may also be supported. The 5G frequencies may range from 500 MHz to >60 GHz. The supported bands may also vary from country to country. The 5G frequencies may also range from 6 GHz to 100 GHz. 5G frequency bands may include bands such as 5.925-7.025 GHz, 7.235-7.25 GHz, 7.750-8.025 GHz, 10-10.45 GHz, 10.5-10.68 GHz, 12.75-13.25 GHz, 14.3-15.35 GHz, 17.7-19.7 GHz, 21.4-23.6 GHz, 24.25-29.5 GHz, 31-31.3 GHz, 32.3-33.4 GHz, 38-47 GHz, 47.2-50.2 GHz, 50.4-52.6 GHz, 55.78-76 GHz, 81-86 GHz (proposal Sweden) or 27.5-29.5 GHz, 37-40.5 GHz, 47.2-50.2 GHz, 50.4-52.6 GHz, and 59.3-71 GHz (proposal United States).

The presently disclosed receiver and/or transmitter may be a wireless receiver/transmitter, such as an LTE based receiver or a 5G based receiver. The presently disclosed receiver and/or transmitter may alternatively be an optical receiver/transmitter, optionally a free-space optical receiver/transmitter, or a receiver/transmitter for light fidelity (Li-Fi) communication.

Light Fidelity (Li-Fi) is a bidirectional, high-speed and fully networked wireless communication technology similar to Wi-Fi. The technology is a form of visible light communication and a subset of optical wireless communications (OWC) and could be a complement to RF communication, or even a replacement in contexts of data broadcasting.

System and application

The present invention relates to a receiver and a transmitter but also to a complete system comprising the receiver and transmitter as described in the disclosure.

A first embodiment of the system may comprise:

- at least one transmitter, configured to: modulate a signal by applying carrierless amplitude and phase modulation (CAP); multiplex the signal in a power domain;

and transmit the carrierless amplitude and phase modulated-, and power multiplexed signal; and

- at least one receiver, configured to receive the transmitted signal, said receiver being configured to: demodulate the received carrierless amplitude and phase (CAP) modulated signal; and demultiplex the signal in the power domain by applying successive interference cancellation (SIC).

It is understood that the transmitter and receiver may be combined according to any of the embodiments of the receiver and transmitter of the present disclosure.

The system may be part of for example a wired access network, in which the signal is divided between several users using a power splitter, an optical (wired) metro-access network, where the signal crosses Reconfigurable Optical Add/Drop Multiplexers (ROADM).

The system may be a system for communicating over a communication link or for communicating over a network. The system may also be a system for broad- or multicasting from one transmitter to a plurality of receivers.

Detailed description of drawings

The invention will in the following be described in greater detail with reference to a selection of the accompanying drawings. The drawings are exemplary and are intended to illustrate some of the features of the presently disclosed receiver/transmitter/system, and are not to be construed as limiting to the presently disclosed invention.

NOMA and CAP techniques are combined in order to allow flexible resource provisioning that addresses the dynamic nature of user density and capacity demands. Fig. 3A shows a scenario of only two users with different distances to the base station (BS) which will be assigned a high capacity and with all multiCAP bands shared by both users with NOMA multiplexing. When new users try to access the RAN, the resources can be flexibly allocated, assigning multiCAP bands to different users, as shown in Fig. 3B. In this high density scenario, NOMA power multiplexing and multiCAP are employed in combination, reducing the assigned capacity to each user but increasing the users density of the RAN and optimizing overall system throughput.

Fig. 4 shows power multiplexing using NOMA and multiCAP: (left) NOMA multiplexing of two users employing all multiCAP bands, (right) multiple users are multiplexed employing NOMA and multiCAP to accommodate user and flexibly share system capacity.

Fig. 5 shows the transmitter NOMA power multiplexing being applied at the constellation level for each multiCAP band independently and before generation of the multiCAP signal. NOMA-CAP reception will require the extraction of each multiCAP band – employing its matched filters – and then the SIC process to extract the signal of interest. If several NOMA users have been multiplexed, the SIC process will be applied iteratively after multiCAP demultiplexing until the user signal of interest is demodulated.

Fig. 9 shows a schematic of an experimental setup; A hybrid photonic-wireless link is used to test several communication mediums. The setup comprises an ECL: external cavity laser, MZM: Mach-Zehnder modulator, VSG: vector signal generator, RF: radio frequency, EDFA: erbium doped fiber amplifier, AWGG: arrayed waveguide grating, AWG: arbitrary waveform generator, BAL: balun, VOA: variable optical attenuator, SMF: standard single mode fiber, PD: photodiode, MPA: medium power amplifier, LNA: low noise amplifier, LO: local oscillator, DSO: digital storage oscilloscope.

Example

The invention is now described by demonstrating an example of a possible embodiment comprising a NOMA-CAP system employing two levels of NOMA with QPSK signals and six 1.25 GHz multiCAP bands. The system is exemplary and is not to be construed as limiting to the presently disclosed invention. This system may provide an aggregated transmission rate of 30 Gbit/s and has been evaluated in two different scenarios. In the first scenario – a low user density scenario – the capacity of the RAN is distributed between two users employing NOMA-CAP, as in Fig. 4A, to obtain 15 Gbit/s per user. In the second scenario twelve users are multiplexed using NOMA-CAP as in Fig. 4B, and the RAN capacity is divided evenly among all users to obtain 2.5 Gbit/s per user.

The setup is evaluated over a hybrid photonic-wireless link and follows the concepts of C-RAN with analogue RoF fronthaul and mm-wave radio access units (RAUs) of minimized complexity. The setup – schematically shown in Fig. 9 – thus consists of three stations that are linked by fiber and wireless transmission respectively: A. Optical Signal Generation, the equivalent of the central office (CO), where an optical signal with two spectral lines spaced at the frequency of the radio carrier f_{RF} is generated, carrying the NOMA-CAP signal and linked via analogue RoF over 10 km of standard single mode fiber (SMF) to B. the Optical to Radio Frequency Conversion in the RAU from where the signal is wirelessly delivered to C. the Wireless Receiver. The latter recovers the RF signal, translates it to baseband and performs the DSP required to decode the NOMA-CAP signal.

The block diagram for generation of the NOMA-CAP signal in digital signal processing (DSP) is shown in Fig. 10. First, the user data – pseudo random binary sequences (PRBSs) of length 2^{11}-1 – are distributed among all the assigned multiCAP bands (varying between one and all available bands) and are QPSK mapped for each NOMA level. The two NOMA levels are power weighted and added for each multiCAP band before the band signals are upsampled and filtered with a pair of band specific multiCAP orthogonal filters. In all scenarios a total of six multiCAP bands of 1.25 GHz is used. Finally the signals are aggregated into the transmitter NOMA-CAP signal.

At the receiver an antenna recovers the RF signal which is amplified by 20 dB using a low noise amplifier (LNA) before down conversion to an intermediate frequency (IF) at $f_{IF} = f_{RF} - f_{LO}$ in a balanced mixer. The local oscillator (LO) for the mixer is obtained from a passive frequency doubler, driven with a sinusoid at $f_{LO}/2$ from a second VSG. The resulting IF signal is DC blocked and amplified before it is recorded on a digital storage oscilloscope (DSO) for offline processing. The receiver signal processing block diagram is shown in Fig. 11 and consists of a Costas loop for carrier frequency and phase recovery for IF to baseband conversion, after it was band-filtered for noise bandwidth reduction. The baseband signal is low-pass filtered and each multiCAP band is extracted, employing the pair of orthogonal filters for the band of interest; this part may be common to all the receivers, as is shown in Fig. 11A. The close users implement SIC as is shown in Fig. 11B where the SIC consists of a decision feedback equalizer (DFE) with 30 forward and 20 backward taps, calculation of the symbol centroid of the far user and subtraction from the equalized signal. After the SIC, the

DFE is applied again and the signal is demapped. In the case of far users, SIC is not requires and the DFE and demapping are performed directly, as shown in Fig. 11C.

The system has been demonstrated to achieve an aggregate system capacity of 30 Gbit/s using a NOMA-CAP signal consisting of six bands with a width of 1.25 GHz each. The proposed NOMA-CAP over W-band RoF network can dynamically adapt to varying user data rate demands and user densities. This flexible multi-user provisioning will allow to vary the data rate provided to the current users to grant access to new users in the RAN. In a low user density scenario, a high data rate can be provided to the users. If new users need to be served by the RAN, the provided data rate can be reduced, assigning the multiCAP bands independently to these new users and avoiding that they get blocked. The experimental demonstration of these situations has shown possible operation with 2 users with 15 Gbit/s data rate each or 12 users with 2.5 Gbit/s each.

Further details of the invention

The invention will now be described in further detail with reference to the following items:

1. A receiver, configured to receive a carrierless amplitude and phase (CAP) modulated signal, wherein the signal has been further multiplexed in a power domain, said receiver being configured to: demodulate the received carrierless amplitude and phase (CAP) modulated signal; and further demultiplex the signal in the power domain by applying successive interference cancellation (SIC).

2. The receiver according to any of the preceding items, wherein the signal has been further divided into subband, and wherein the receiver is configured to demodulate the received carrierless amplitude and phase modulated signal for each subband.

3. The receiver according to any of the preceding items, wherein the receiver is a combined multiband CAP and non-orthogonal multiple access (NOMA) receiver.

4. The receiver according to any of the preceding items, wherein the receiver is configured to receive a CAP impulse comprising an in-phase signal component and a quadrature signal component and determine the amplitudes of the components.

5. The receiver according to any of the preceding items, wherein the CAP modulated signal is phase sensitive and amplitude sensitive and comprises an in-phase component and a quadrature component, wherein each of the components has a predefined amplitude level, and wherein the receiver is configured to demodulate the phase and the amplitude of the CAP modulated signal.

6. The receiver according to any of the preceding items, wherein the subbands are independent subbands occupying different frequency bands.

7. The receiver according to any of the preceding items, wherein the received signal is non-orthogonally multiplexed.

8. The receiver according to item 7, further comprising a successive interference cancellation (SIC) receiver for separating the non-orthogonally multiplexed signal.

9. The receiver according to any of the preceding items, wherein frequency ranges of the subbands and power bands are dynamically adaptable.

10. The receiver according to any of the preceding items, wherein the receiver is a wireless receiver, such as an LTE based receiver or a 5G based receiver.

11. The receiver according to any of items 1-9, wherein the receiver is an optical receiver, optionally a free-space optical receiver, or a receiver for light fidelity (Li-Fi) communication.

12. A transmitter, configured to: modulate a signal by applying carrierless amplitude and phase modulation (CAP); multiplex the signal in a power domain; and transmit the carrierless amplitude and phase modulated- , and power multiplexed signal.

13. The transmitter according to item 12, wherein the transmitter is configured to frequency multiplex the signal into subbands occupying different frequency bands.

14. The transmitter according to any of items 12-13, wherein the transmitter is a combined multiband CAP and non-orthogonal multiple access (NOMA) transmitter.

15. The transmitter according to any of items 12-14, wherein the transmitter is configured to generate a CAP impulse comprising an in-phase signal component and a quadrature signal component, wherein each of the components has a predefined amplitude level.

16. The transmitter according to any of items 12-15, wherein the subbands are independent subbands.

17. The transmitter according to any of items 12-16, wherein the carrierless amplitude and phase modulation of the frequency-multiplexed signal is adapted to a signal-to-noise ratio for each subband.

18. The transmitter according to any of items 12-17, wherein the carrierless amplitude and phase modulation of the frequency-multiplexed signal is adapted to impairments associated with the individual subbands, such as frequency multipath fading.

19. The transmitter according to any of items 12-18, wherein the multiplexing of the signal in a power domain comprises modulation of the signal with two or more low order constellations simultaneously.

20. The transmitter according to any of items 12-19, wherein the multiplexing of the signal in a power domain corresponds to allocating different power domains to different users.

21. The transmitter according to any of items 12-20, wherein the allocation of power domains to the users are based on signal qualities of individual users.

22. The transmitter according to any of items 12-21, wherein non-orthogonal multiple access multiplexing is applied at constellation level for each subband independently.

23. The transmitter according to any of items 12-22, wherein frequency ranges of the subbands and power bands are dynamically adaptable.

24. The transmitter according to any of items 12-23, wherein the transmitter is a wireless transmitter, such as an LTE based transmitter or a 5G based transmitter.

25. The transmitter according to any of items 12-23, wherein the transmitter is an optical transmitter, optionally a free-space optical transmitter, or a transmitter for light fidelity (Li-Fi) communication.

26. A system comprising:
- at least one transmitter, configured to: modulate a signal by applying carrierless amplitude and phase modulation (CAP); multiplex the signal in a power domain; and transmit the carrierless amplitude and phase modulated-, and power multiplexed signal; and
- at least one receiver, configured to receive the transmitted signal, said receiver being configured to: demodulate the received carrierless amplitude and phase (CAP) modulated signal; and demultiplex the signal in the power domain by applying successive interference cancellation (SIC).

27. The system according to item 26 configured to communicate over a communication link.

28. The system according to any of items 26-27 configured to communication over a network.

29. The system according to any of items 26-28, wherein the system is configured to broadcast from one transmitter to a plurality of receivers.

30. The system according to any of items 26-29, wherein the at least one transmitter is a transmitter according to any of items 12-25, and/or the at least one receiver is a receiver according to any of items 1-11.

Claims

1. A receiver, configured to receive a carrierless amplitude and phase (CAP) modulated signal, wherein the signal has been further multiplexed in a power domain, said receiver being configured to: demodulate the received carrierless amplitude and phase (CAP) modulated signal; and further demultiplex the signal in the power domain by applying successive interference cancellation (SIC).

2. The receiver according to any of the preceding claims, wherein the signal has been further divided into subbands, and wherein the receiver is configured to demodulate the received carrierless amplitude and phase modulated signal for each subband.

3. The receiver according to any of the preceding claims, wherein the receiver is a combined multiband CAP and non-orthogonal multiple access (NOMA) receiver.

4. The receiver according to claim 2, wherein the subbands are independent subbands occupying different frequency bands.

5. The receiver according to claim 4, wherein the independent subbands are non-overlapping subbands.

6. The receiver according to any of the preceding claims, wherein the received signal is non-orthogonally multiplexed, and wherein the receiver further comprises a successive interference cancellation (SIC) receiver for separating the non-orthogonally multiplexed signal.

7. The receiver according to claims 2, 4 or 5, wherein frequency ranges of the subbands and power bands are dynamically adaptable in frequency configurations and power band configurations, and wherein the receiver is configured to demodulate the received carrierless amplitude and phase modulated signal; and further demultiplex the signal in the power domain by applying successive interference cancellation based on the frequency configurations and power band configurations.

8. A transmitter, configured to: in any sequential order, modulate a signal by applying carrierless amplitude and phase modulation (CAP); multiplex the signal in a power domain; and transmit the carrierless amplitude and phase modulated- , and power multiplexed signal.

9. The transmitter according to claim 8, wherein the transmitter is configured to frequency multiplex the signal into subbands occupying different frequency bands.

10. The transmitter according to any of claims 8-9, wherein the transmitter is a combined multiband CAP and non-orthogonal multiple access (NOMA) transmitter.

11. The transmitter according to any of claims 8-10, wherein the multiplexing of the signal in a power domain corresponds to allocating different power domains to different users.

12. The transmitter according to any of claims 8-11, wherein the allocation of power domains to the users are based on signal qualities of individual users.

13. The transmitter according to any of claims 8-12, wherein non-orthogonal multiple access multiplexing is applied at constellation level for each subband independently.

14. The transmitter according claim 9, wherein the transmitter is configured to adapt the frequency ranges of the subbands and power bands dynamically in frequency configurations and power band configurations.

15. A system comprising:

- at least one transmitter, configured to: modulate a signal by applying carrierless amplitude and phase modulation (CAP); multiplex the signal in a power domain; and transmit the carrierless amplitude and phase modulated-, and power multiplexed signal; and
- at least one receiver, configured to receive the transmitted signal, said receiver being configured to: demodulate the received carrierless amplitude and phase

(CAP) modulated signal; and demultiplex the signal in the power domain by applying successive interference cancellation (SIC).

16. The system according to claim 15, wherein the transmitter is transmitter according to any of claims 8-14, and the receiver is the receiver according to any of claims 1-7.

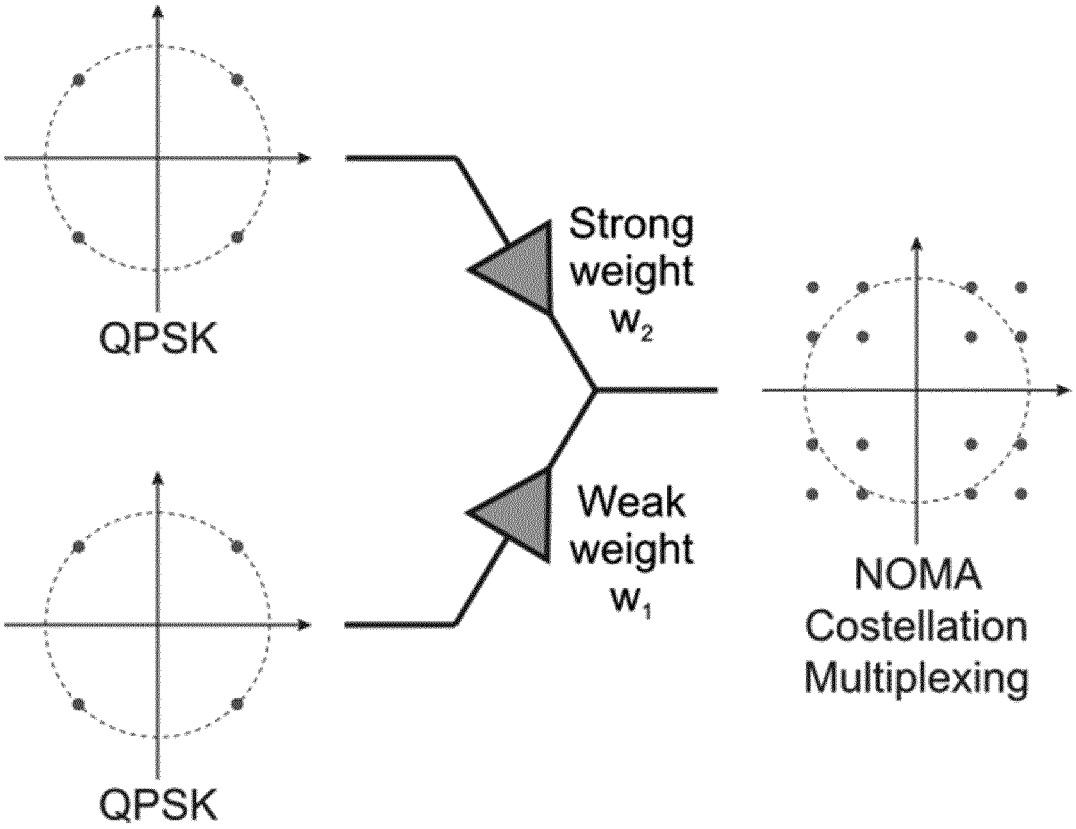
QPSK
QPSK
Strong weight w_2
Weak weight w_1
NOMA Costellation Multiplexing

FIG. 1

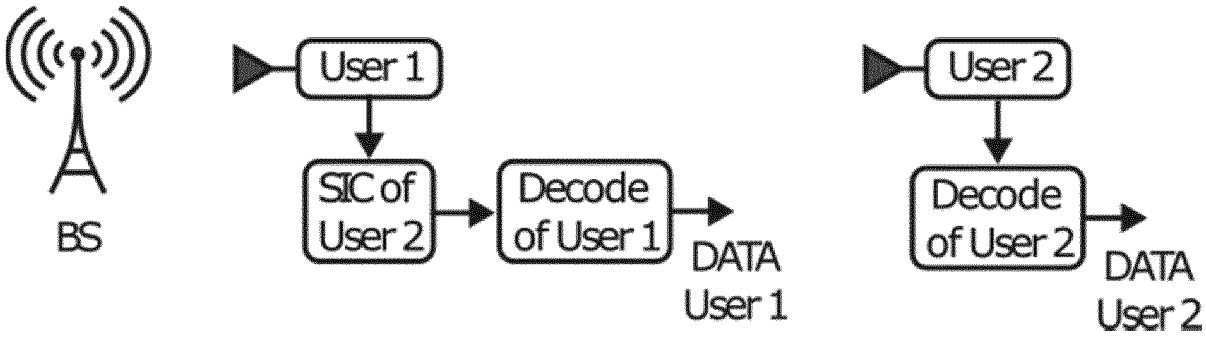
BS
User 1
SIC of User 2
Decode of User 1
DATA User 1
User 2
Decode of User 2
DATA User 2

FIG. 2

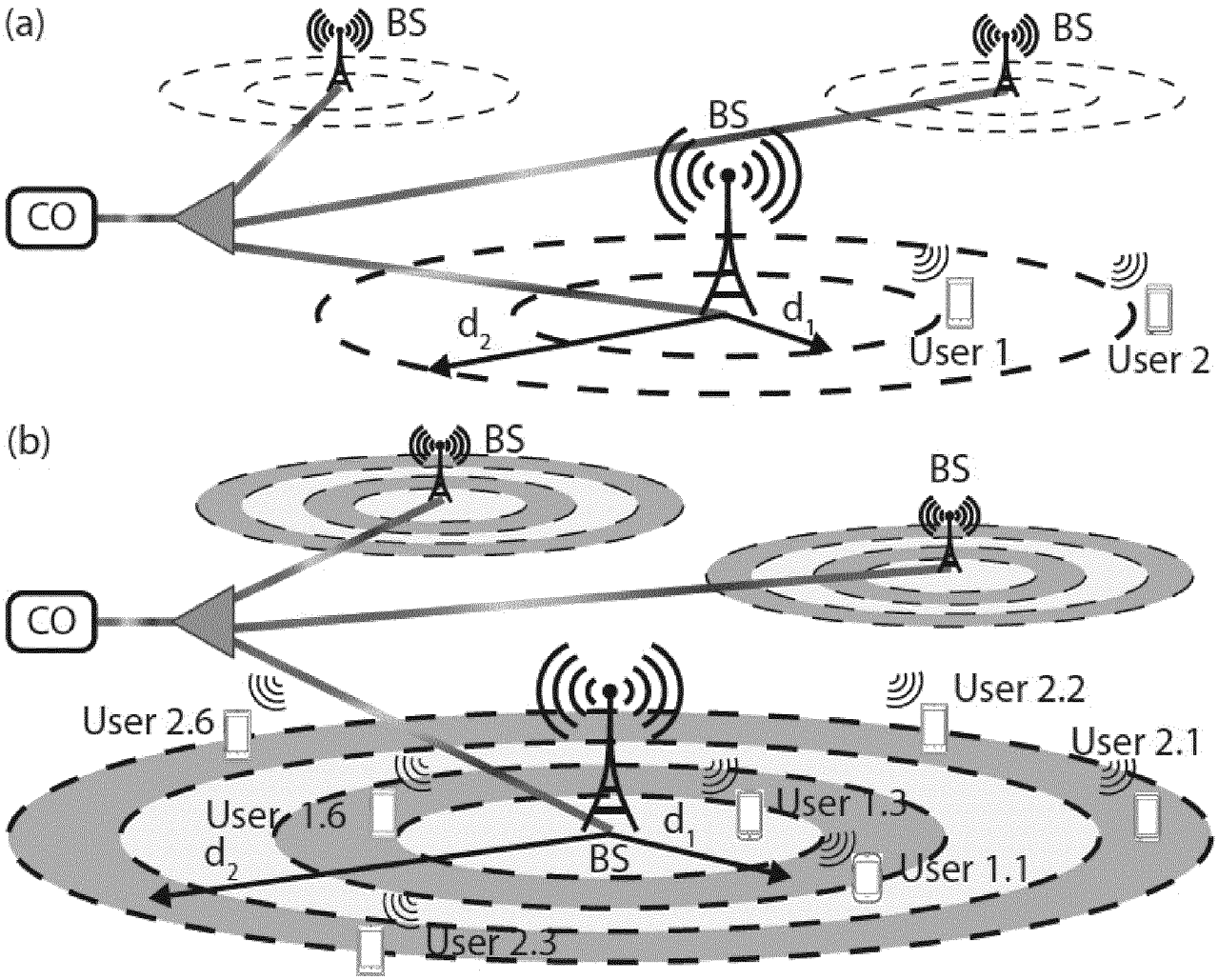
(a)
BS
BS
BS
CO
d_2
d_1
User 1
User 2
(b)
BS
BS
CO
User 2.6
User 2.2
User 2.1
User 1.6
d_1
User 1.3
d_2
BS
User 1.1
User 2.3

FIG. 3

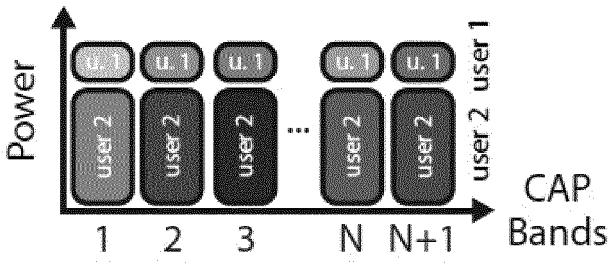

FIG. 4A

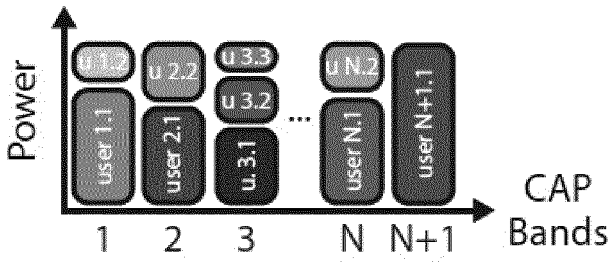

FIG. 4B

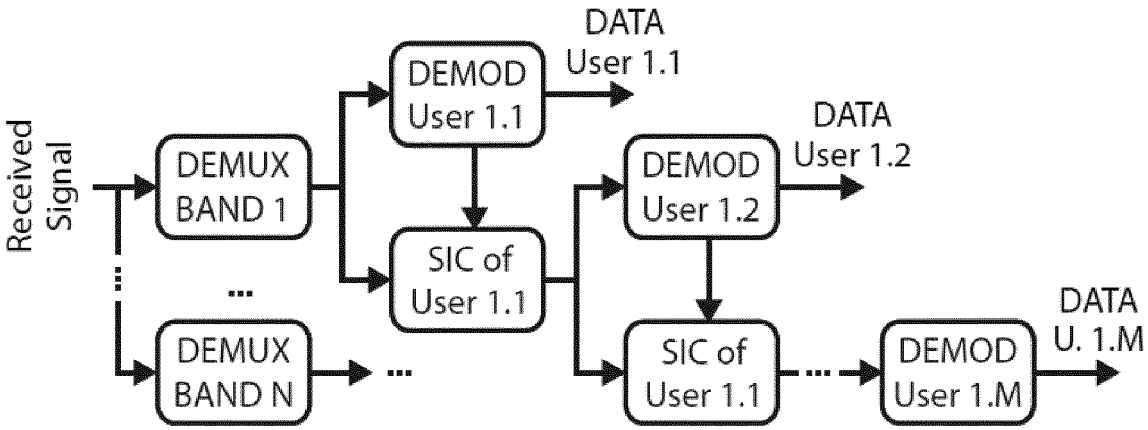

FIG. 5

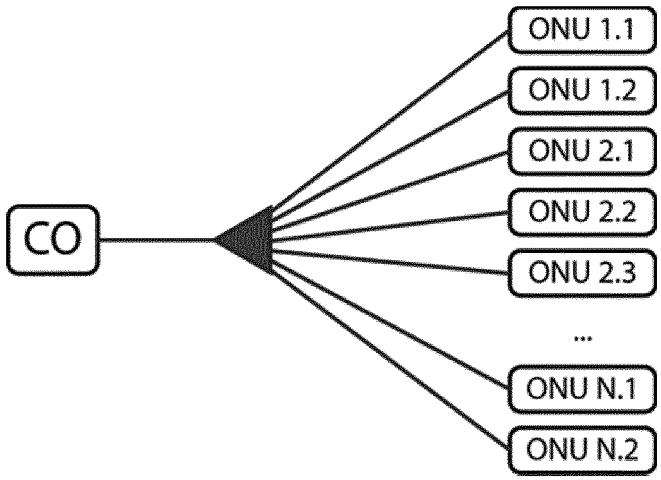

FIG. 6

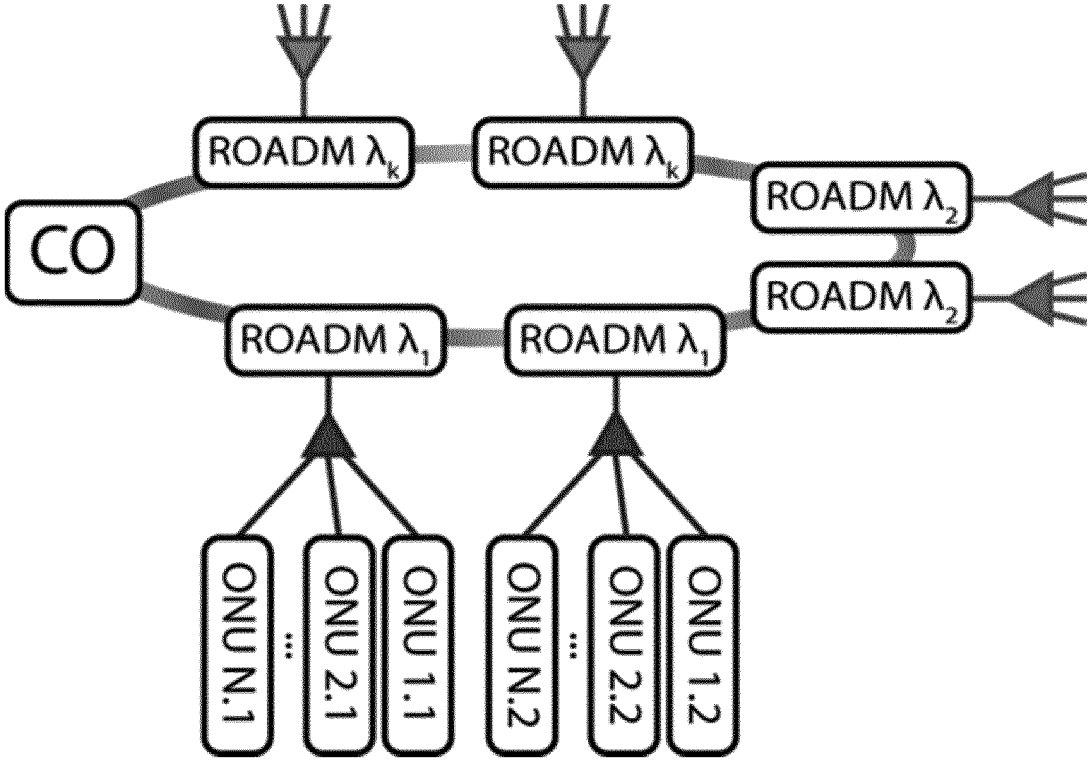
CO
ROADM λk
ROADM λk
ROADM λ2
ROADM λ2
ROADM λ1
ROADM λ1
ONU N.1
ONU 2.1
ONU 1.1
ONU N.2
ONU 2.2
ONU 1.2

FIG. 7

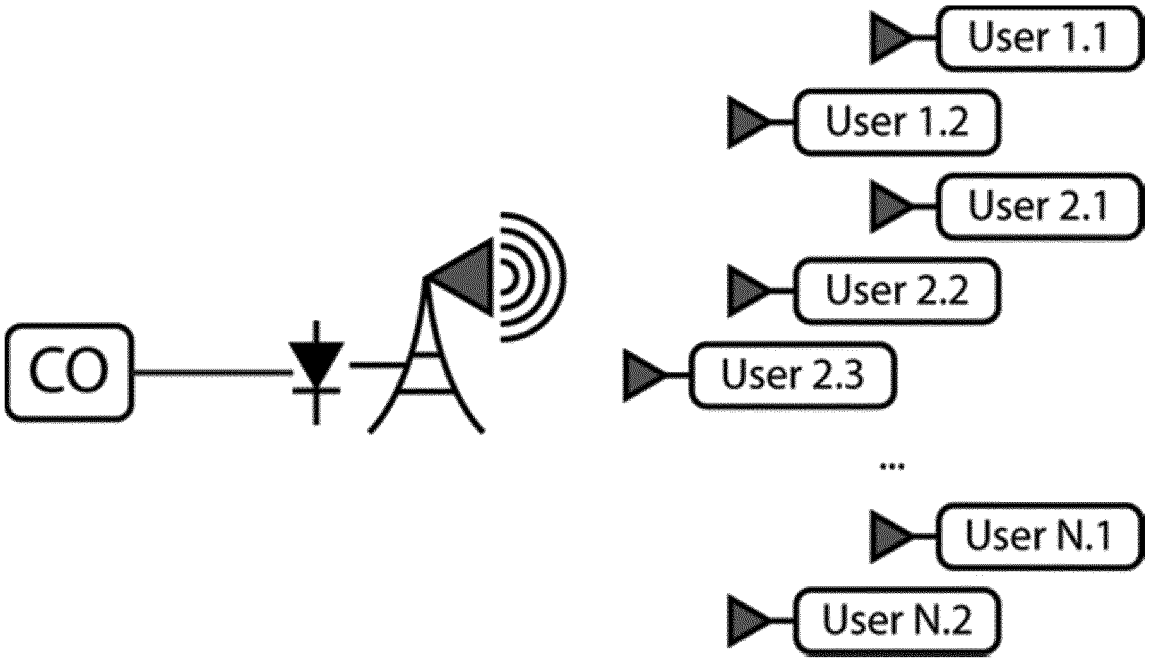
CO
User 1.1
User 1.2
User 2.1
User 2.2
User 2.3
User N.1
User N.2

FIG. 8

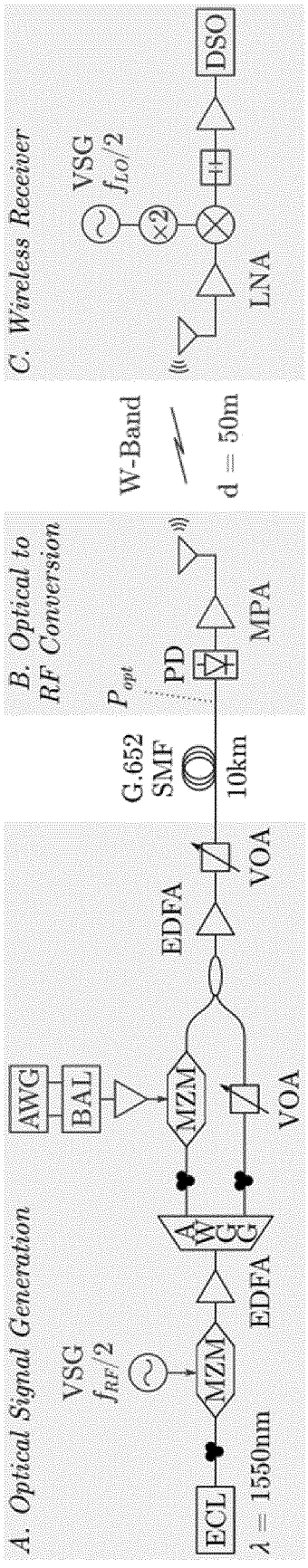
A. Optical Signal Generation
ECL
$\lambda = 1550$nm
MZM
VSG
$f_{RF}/2$
AWG
BAL
MZM
EDFA
AWG
VOA
EDFA
VOA
G.652
SMF
10km
B. Optical to
RF Conversion
P_{opt}
PD
MPA
W-Band
d = 50m
C. Wireless Receiver
LNA
VSG
$f_{LO}/2$
×2
DSO

FIG. 9

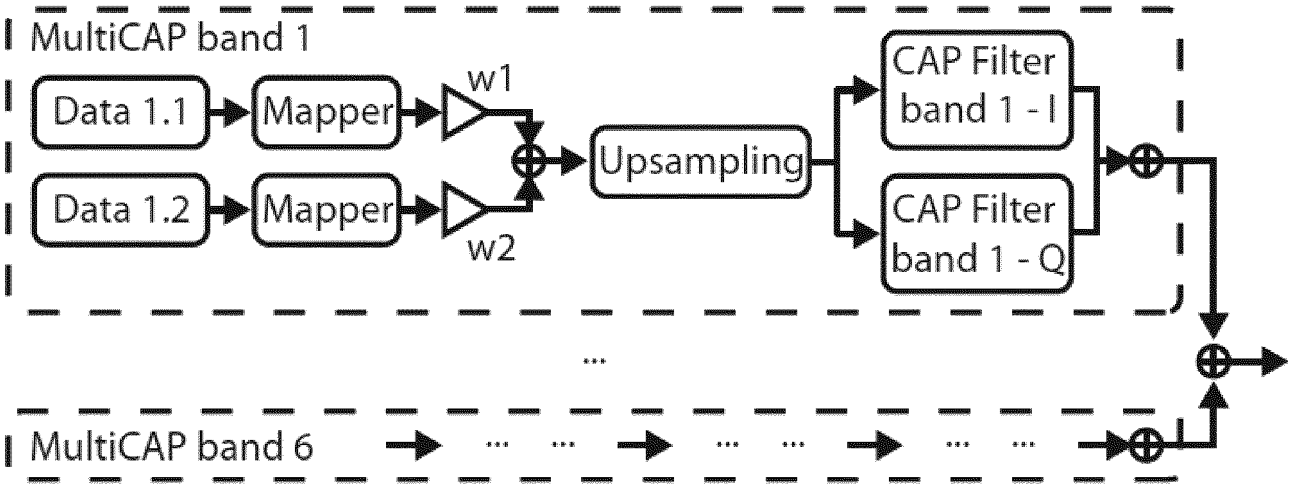
MultiCAP band 1
Data 1.1
Mapper
w1
Data 1.2
Mapper
w2
Upsampling
CAP Filter band 1 - I
CAP Filter band 1 - Q
MultiCAP band 6

FIG. 10

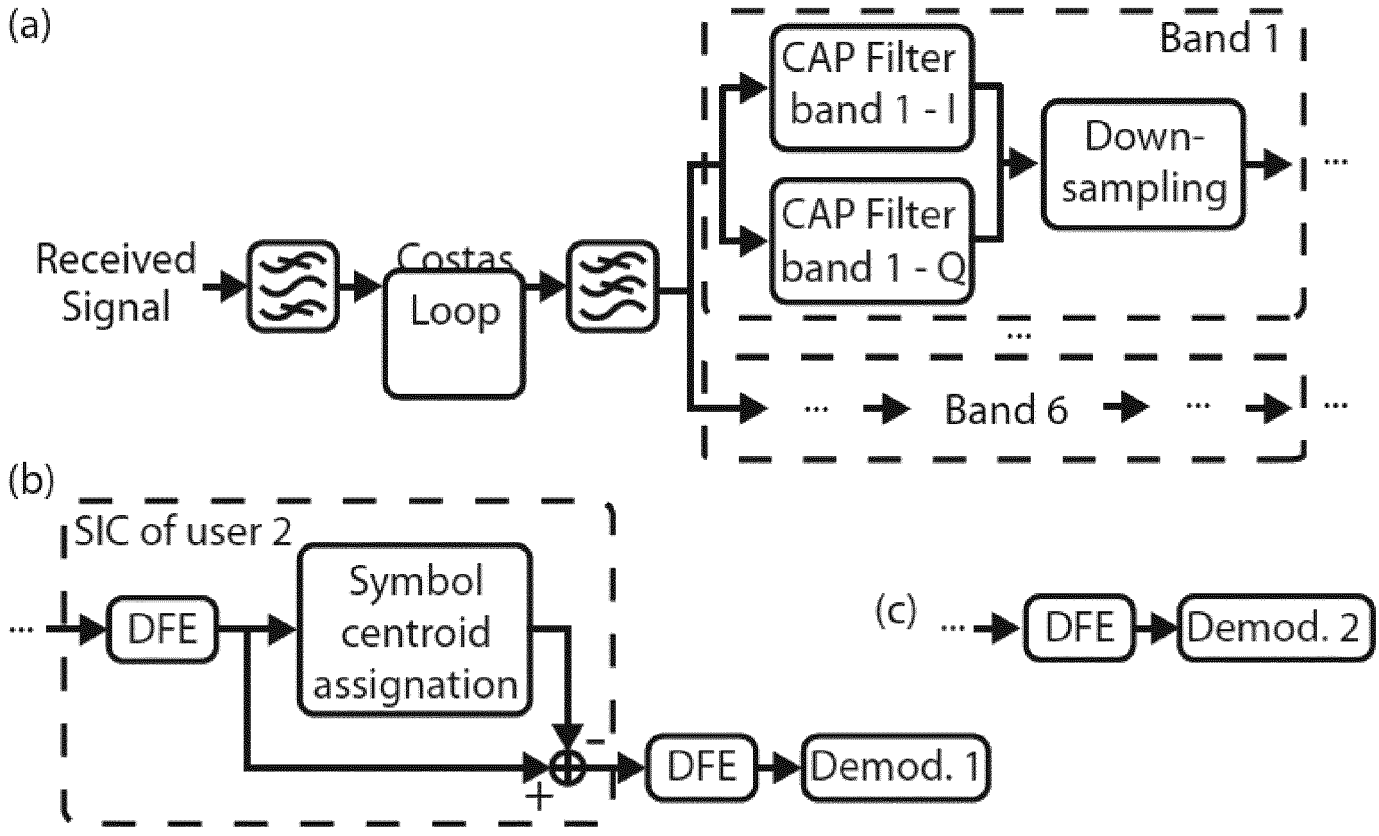
(a)
Band 1
CAP Filter band 1 - I
CAP Filter band 1 - Q
Down-sampling
Received Signal
Costas Loop
Band 6
(b)
SIC of user 2
DFE
Symbol centroid assignation
DFE
Demod. 1
(c)
DFE
Demod. 2

FIG. 11

INTERNATIONAL SEARCH REPORT

International application No
PCT/EP2018/051947

A. CLASSIFICATION OF SUBJECT MATTER
INV. H04L5/00 H04L25/49 H04L27/34
ADD.

According to International Patent Classification (IPC) or to both national classification and IPC

B. FIELDS SEARCHED

Minimum documentation searched (classification system followed by classification symbols)
H04L H04B

Documentation searched other than minimum documentation to the extent that such documents are included in the fields searched

Electronic data base consulted during the international search (name of data base and, where practicable, search terms used)
EPO-Internal, WPI Data

C. DOCUMENTS CONSIDERED TO BE RELEVANT

Category*	Citation of document, with indication, where appropriate, of the relevant passages	Relevant to claim No.
X	HAAS HARALD ET AL: "What is LiFi?", JOURNAL OF LIGHTWAVE TECHNOLOGY, IEEE SERVICE CENTER, NEW YORK, NY, US, vol. 34, no. 6, 15 March 2016 (2016-03-15) , pages 1533-1544, XP011609182, ISSN: 0733-8724, DOI: 10.1109/JLT.2015.2510021 [retrieved on 2016-03-03] abstract Sections III-V; figure 5 ----- -/--	1,6,8, 11,12,15

[X] Further documents are listed in the continuation of Box C. [ ] See patent family annex.

* Special categories of cited documents :

"A" document defining the general state of the art which is not considered to be of particular relevance

"E" earlier application or patent but published on or after the international filing date

"L" document which may throw doubts on priority claim(s) or which is cited to establish the publication date of another citation or other special reason (as specified)

"O" document referring to an oral disclosure, use, exhibition or other means

"P" document published prior to the international filing date but later than the priority date claimed

"T" later document published after the international filing date or priority date and not in conflict with the application but cited to understand the principle or theory underlying the invention

"X" document of particular relevance; the claimed invention cannot be considered novel or cannot be considered to involve an inventive step when the document is taken alone

"Y" document of particular relevance; the claimed invention cannot be considered to involve an inventive step when the document is combined with one or more other such documents, such combination being obvious to a person skilled in the art

"&" document member of the same patent family

Date of the actual completion of the international search	Date of mailing of the international search report
13 March 2018	26/03/2018

Name and mailing address of the ISA/	Authorized officer
European Patent Office, P.B. 5818 Patentlaan 2 NL - 2280 HV Rijswijk Tel. (+31-70) 340-2040, Fax: (+31-70) 340-3016	Epple, Ulrich

1

Form PCT/ISA/210 (second sheet) (April 2005)

C(Continuation). DOCUMENTS CONSIDERED TO BE RELEVANT

Category*	Citation of document, with indication, where appropriate, of the relevant passages	Relevant to claim No.
Y	RAFAEL PUERTA ET AL: "Multiband carrierless amplitude/phase modulation for ultrawideband high data rate wireless communications", MICROWAVE AND OPTICAL TECHNOLOGY LETTERS, vol. 58, no. 7, 23 July 2016 (2016-07-23), pages 1603-1607, XP055388244, US ISSN: 0895-2477, DOI: 10.1002/mop.29866 Sections 2.2, 3.1; figure 2 -----	1-16
Y	"Justification for NOMA in New Study on Enhanced Multi-User Transmission and Network Assisted Interference Cancellation for LTE NTT DOCOMO, INC", 3GPP DRAFT; RP-141936 JUSTIFICATION FOR NOMA, 3RD GENERATION PARTNERSHIP PROJECT (3GPP), MOBILE COMPETENCE CENTRE ; 650, ROUTE DES LUCIOLES ; F-06921 SOPHIA-ANTIPOLIS CEDEX ; FRANCE , vol. TSG RAN, no. Maui, USA; 20141208 - 20141211 2 December 2014 (2014-12-02), XP050898641, Retrieved from the Internet: URL:http://www.3gpp.org/ftp/Meetings_3GPP_SYNC/RAN/Docs/ [retrieved on 2014-12-02] page 1 - page 4 page 13 -----	1-16

1