Miniaturization of LED Drivers

Ammar, Ahmed Morsi; Spliid, Frederik Monrad; Nour, Yasser; Knott, Arnold

Publication date:
2018

Document Version
Publisher's PDF, also known as Version of record

Citation (APA):
Ammar, A. M., Spliid, F. M., Nour, Y., & Knott, A. (2018). *Miniaturization of LED Drivers*. Poster session presented at 6th International Workshop on Power Supply-On-Chip, Hsinchu, Taiwan, Province of China.

Miniaturization of LED Drivers

Ahmed Ammar, Frederik Spliid, Yasser Nour & Arnold Knott

Technical University of Denmark, DTU Electrical Engineering, Electronics group

Elektrovej 325, 2nd floor, 2800 Kgs. Lyngby, Denmark

PWR SOC 18

Hsinchu, Taiwan
Oct. 17-19, 2018

Introduction

- Great demand for miniaturization in lighting industry
- Power supplies are bottle neck, due to their bulky energy storage components
- This poster: several design considerations towards miniaturized LED drivers.

Design Considerations

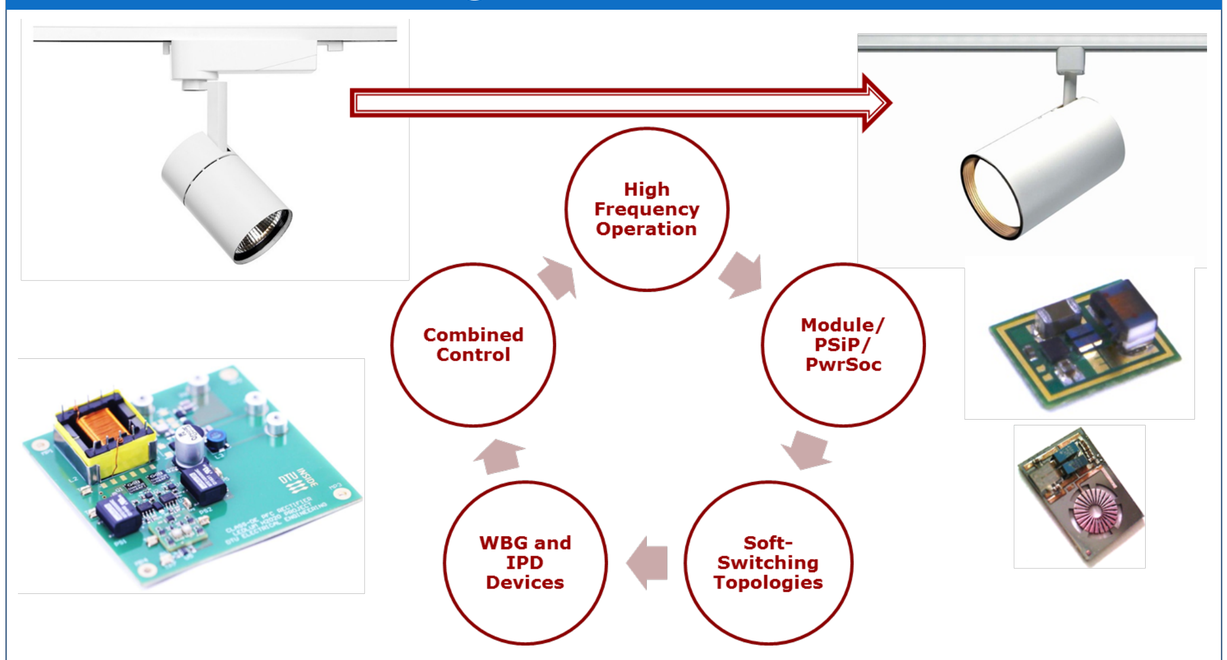

Fig. 1 Miniaturization Strategy.

- **Topologies:** Soft-switching resonant converters
- **Control:** Combination of control schemes (e.g. frequency control + burst mode control)
- **Devices:** Wide band-gap (WBG) devices and Integrated Passive Devices (IPDs) technologies
- **Energy Storage:** Active ripple port circuits allowing for employment of smaller and more robust capacitor technologies
- **Frequency:** HF and VHF operation.

Experimental Results

Measurement results of a class-DE series-resonant converter that can be incorporated for the AC-DC and the DC-DC stages in an LED driver:

- Up to 400V input with soft-switching
- 1 MHz operation
- High voltage GaN switches and SiC diodes
- Potential for operation in HF and VHF ranges
- Frequency modulation can be used for line/load regulation.

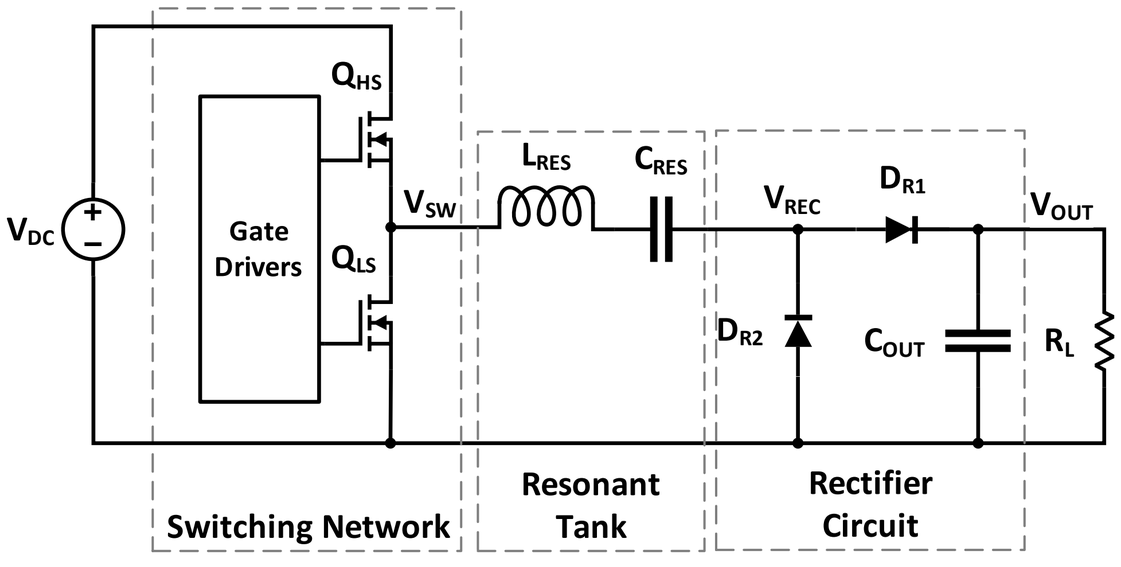

Fig. 2 Class-DE Series-Resonant Converter.

Experimental Results

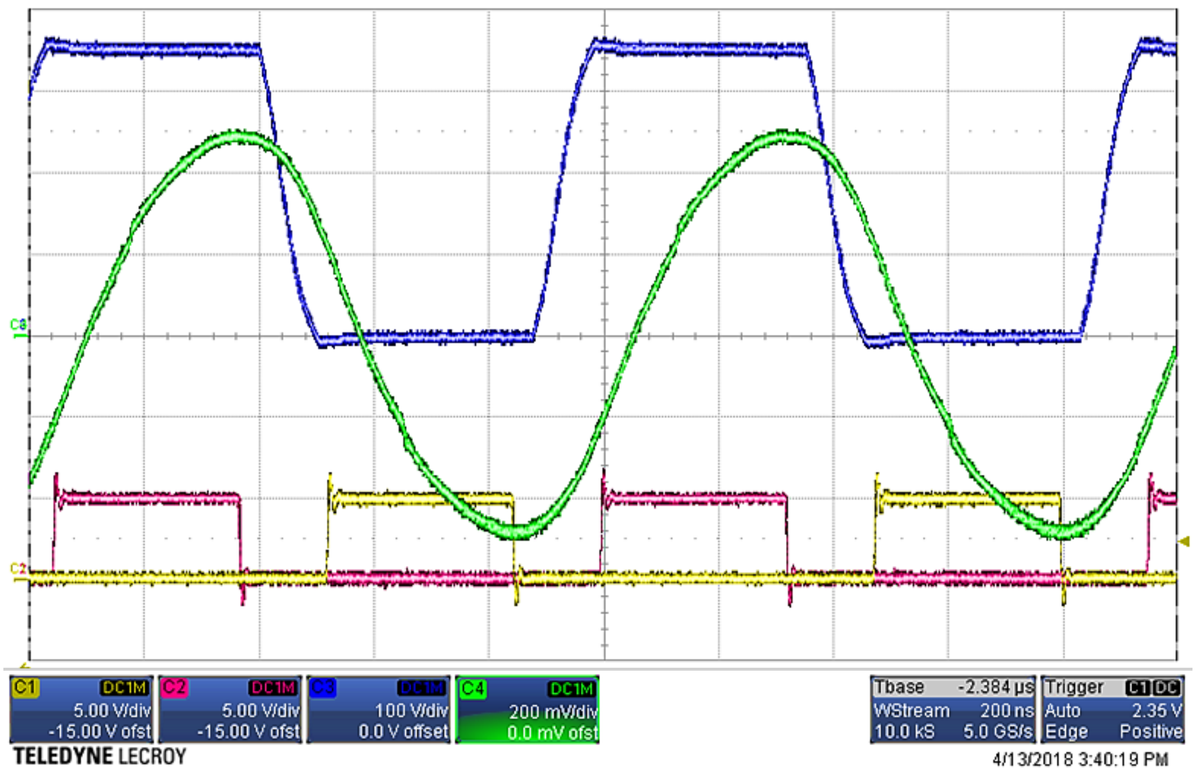

Fig. 3 Scope image showing the switching node voltage (blue), sinusoidal resonant inductor current (green), and gate signals for 350V input voltage.

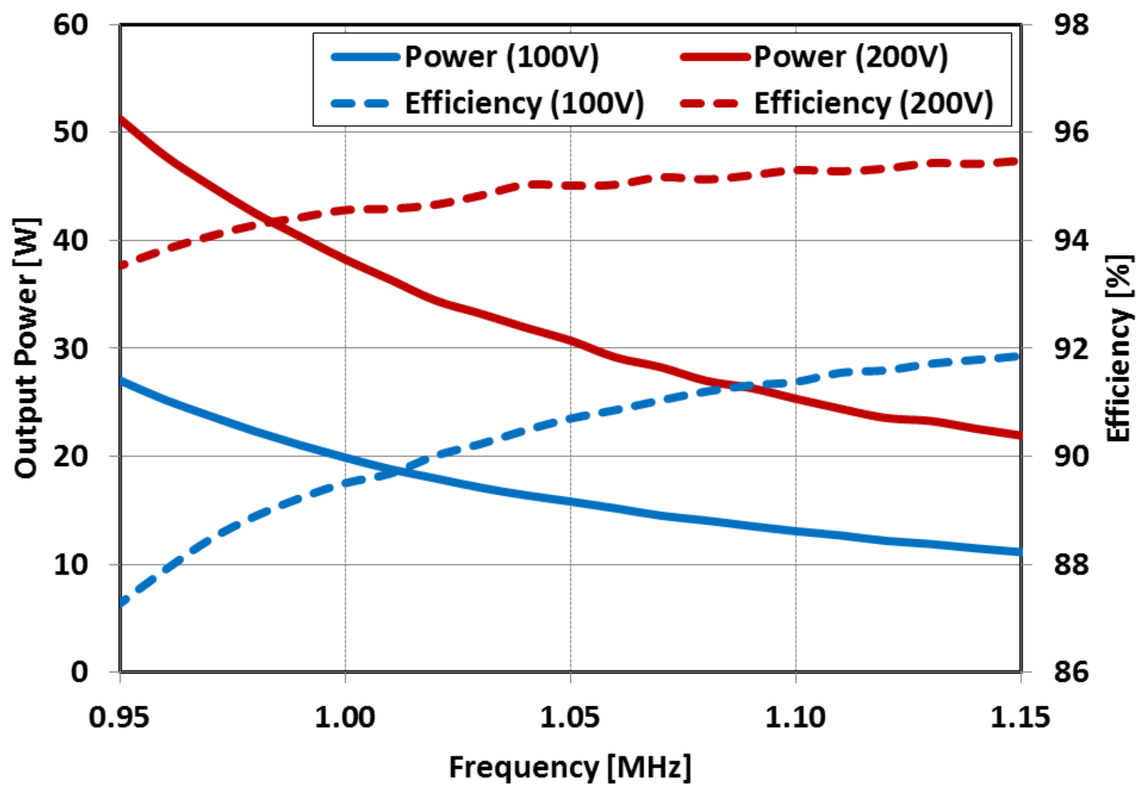

Fig. 4 Efficiency and output power for different output voltages.

Conclusion

- Operation at high frequencies is key for miniaturization
- Good candidate: soft-switching resonant converters
- WBG devices show great potential for high efficiencies
- Combined control can allow for enhanced line/load regulation.

References

[1] A. Knott et al., "Evolution of Very High Frequency Power Supplies," in *IEEE Journal of Emerging and Selected Topics in Power Electronics*, vol. 2, no. 3, pp. 386-394, Sept. 2014.

[2] Y. Nour and A. Knott, "Module integrated GaN power stage for high switching frequency operation," *2017 IEEE 12th International Conference on Power Electronics and Drive Systems (PEDS)*, Honolulu, HI, 2017, pp. 848-852.

Acknowledgement

This project has received funding from the European Union's Horizon 2020 research and innovation programme under grant agreement No 731466