Design considerations for integration of two 5 MW vapour compression heat pumps in the Greater Copenhagen district heating system

Ommen, Torben Schmidt; Jørgensen, Pernille Hartmund; Jensen, Jonas Kjær; Markussen, Wiebke Brix; Elmegaard, Brian

Publication date:
2017

Document Version
Publisher's PDF, also known as Version of record

Design considerations for integration of two 5 MW vapour compression heat pumps in the Greater Copenhagen district heating system

3rd International conference on smart energy systems and 4th generation district heating, 13th September 2017

Torben Ommen, Pernille Jørgensen, Jonas Jensen, Wiebke Markussen, Brian Elmegaard

Section of Thermal Energy, Technical University of Denmark

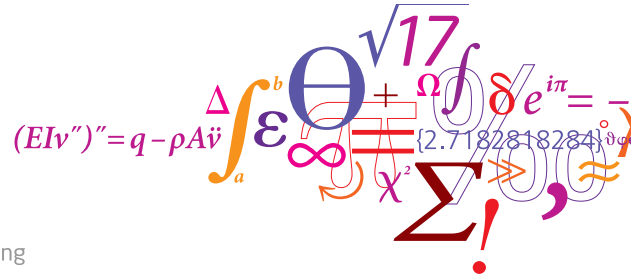

DTU Mechanical Engineering
Department of Mechanical Engineering

Expected share of HPs in Greater Copenhagen DH system

- Heat pumps are often referred to as a key technology for DH integration in the Smart Energy System.
  + Integration potential shared with other unit types: electric boilers and combined heat and power plants.
- Target to supply CO2 neutral district heating for Municipality of Copenhagen by 2025.
  + 53 % of the supplied heat was classified as CO2 neutral in 2015
  + Optimal reduction of heat cost if 300 MW installed capacity by 2035.
  + 130 MW should be in operation by 2025

Expected share of HPs in Greater Copenhagen DH system

- Heat pumps are often referred to as a key technology for DH integration in the Smart Energy System.
  + Integration potential shared with other unit types: electric boilers and combined heat and power plants.
- Target to supply CO2 neutral district heating for Municipality of Copenhagen by 2025.
  + 53 % of the supplied heat was classified as CO2 neutral in 2015
  + Optimal reduction of heat cost if 300 MW installed capacity by 2035.
  + 130 MW should be in operation by 2025
- A number of barriers prevent a large-scale introduction (at least in Denmark), eg.:
  + High cost of the produced heat from large-scale HPs.
  + Limited availability of heat sources.
  + Lack of knowledge and experiences for SES operation.

Agenda

- Introduction
  - Expected share of HPs in Greater Copenhagen DH system
- The SVAF project
  - Two 5 MW HPs in Copenhagen
  - Vapour compression heat pumps in finite reservoirs
  - Heat pumps in combined heat and power systems
  - Economic considerations regarding serial HPs
- Utilisation of a geothermal heat source
  - Suggested configuration for direct heat exchange and HPs
  - Method
  - Results
- Utilisation of waste- and sea water as heat source
  - Two stage Ammonia heat pumps with oil-cooling
  - Examples of 3 suggested configurations
- Future work in the SVAF project

Two 5 MW HPs in Copenhagen

- 3rd generation DH
- Two electric HP systems - Condenser design load: 5 MW
  + One multi-heat source configuration: Waste- and sea water (2018)
  + One single heat source configuration: Geothermal (2019)
- Natural working fluids
  + Currently available units are limited.

Two 5 MW HPs in Copenhagen

- 3rd generation DH
- Two electric HP systems - Condenser design load: 5 MW
  + One multi-heat source configuration: Waste- and sea water (2018)
  + One single heat source configuration: Geothermal (2019)
- Natural working fluids
  + Currently available units are limited.

- The objective of this study is to give initial design suggestions for the system configuration
  + Later used to establish guidelines for generalised system configurations.

Vapour compression heat pumps in finite reservoirs

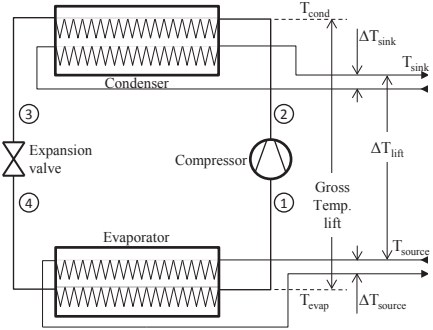

(a) Principle sketch of VCHP

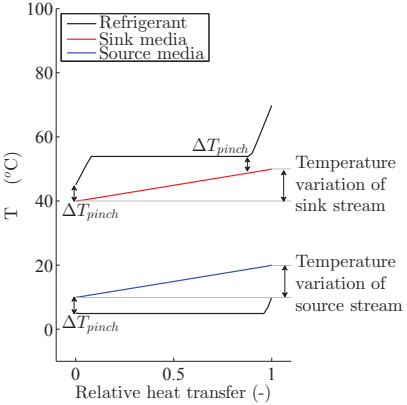

(b) Temperature - Heat load diagram

Heat pumps in combined heat and power systems

In heating systems where majority of heat is supplied by combined heat and power plants (CHP) HPs may be integrated in a number of characteristic methods.

Objective: energy efficiency, heat cost etc.

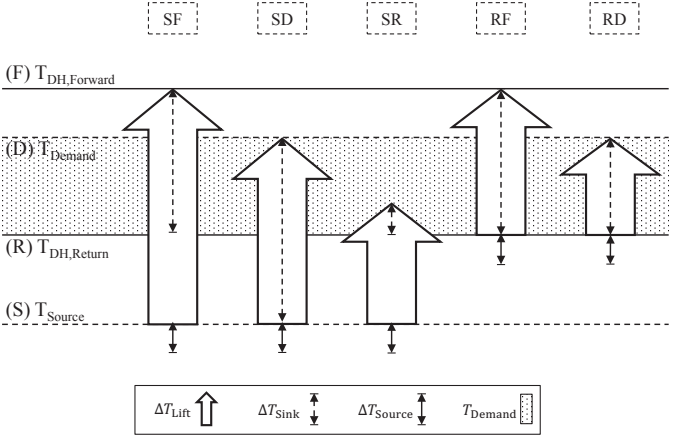

Heat pumps in combined heat and power systems

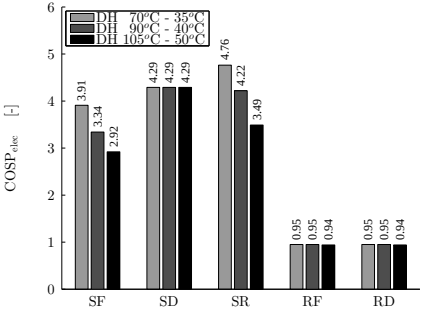

(a) DH network temperature dependency

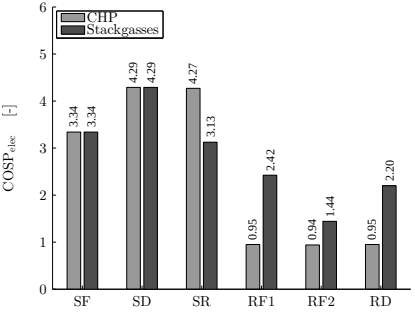

(b) Production characteristics

Economic considerations regarding serial HPs

- Industrial and DH practises are different
  - + DH focuses on cost of heat
  - + Different taxation leads to changed trade off between investment and performance.

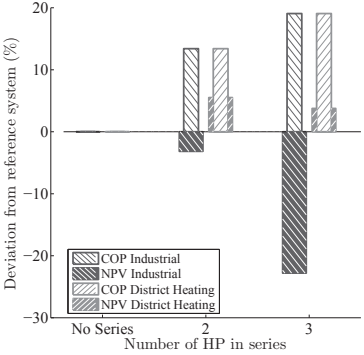

(a) ΔT_{sink} / $\Delta T_{\mathrm{source}}$ = 20 K / 20 K

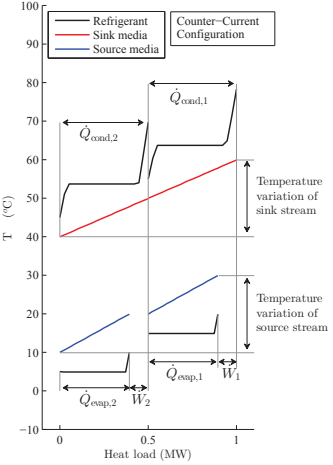

(b) Counter-current configuration

Agenda

- Introduction
  - Expected share of HPs in Greater Copenhagen DH system
- The SVAF project
  - Two 5 MW HPs in Copenhagen
  - Vapour compression heat pumps in finite reservoirs
  - Heat pumps in combined heat and power systems
  - Economic considerations regarding serial HPs
- Utilisation of a geothermal heat source
  - Suggested configuration for direct heat exchange and HPs
  - Method
  - Results
- Utilisation of waste- and sea water as heat source
  - Two stage Ammonia heat pumps with oil-cooling
  - Examples of 3 suggested configurations
- Future work in the SVAF project

Suggested configuration for direct heat exchange

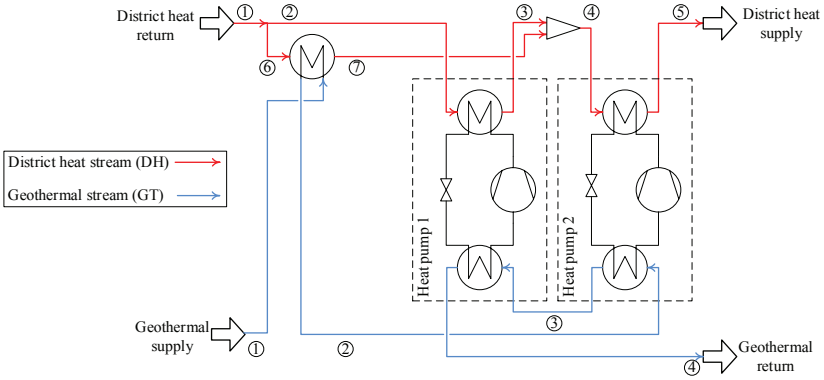

Heat load ratio

$$f_Q = \frac{\dot{Q}_{\mathrm{HP},1}}{\dot{Q}_{\mathrm{HP,tot}}}$$

Mass flow ratio

$$f_m = \frac{\dot{m}_{\mathrm{DH},2}}{\dot{m}_{\mathrm{DH},1}}$$

(a) Principle sketch of suggested configuration

Suggested configuration for direct heat exchange

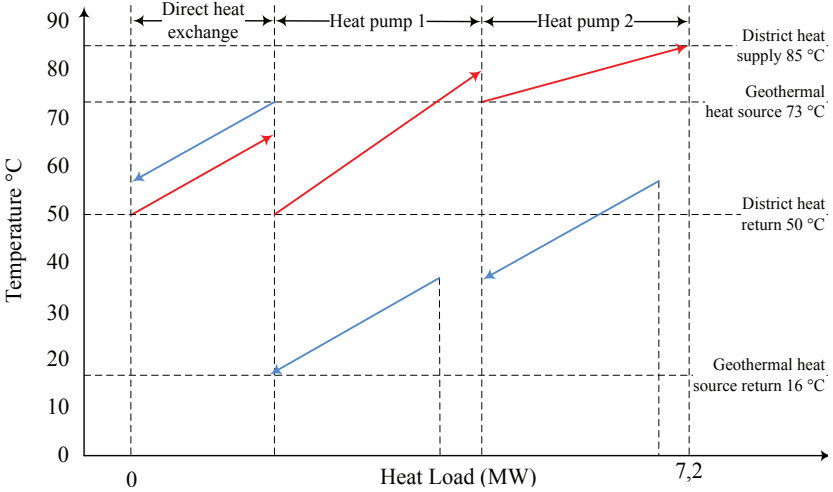

(a) Tempeature heat load diagram of suggested counter-current configuration

Ammonia-water hybrid compression-absorption HP

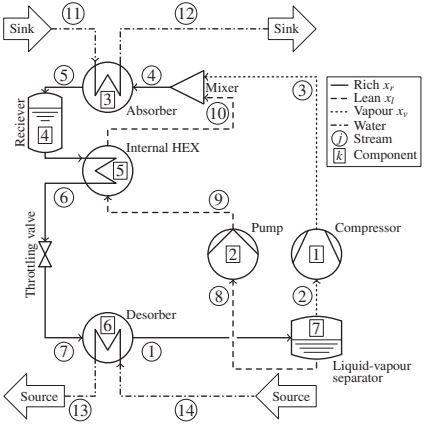

(a) Principle sketch of the HACHP

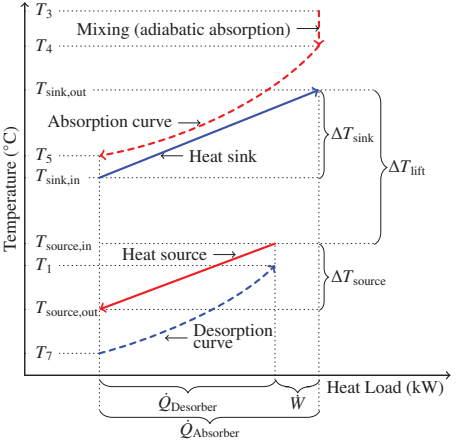

(b) Temperature - heat load diagram of the HACHP

Method

1 Simple system model based on HP exergy efficiency, ϵ_{HP}, and HEX pinch point temperature difference, $\Delta T_{\mathrm{pp,HEX}}$.

+ Investigate optimal $f_{\dot{Q}}$and f_m.
+ Investigate the influence of ϵ_{HP} and $\Delta T_{\mathrm{pp,HEX}}$ on optimal $f_{\dot{Q}}$and f_m.

2 Include the real efficiency of the HACHP.

+ Investigate optimal $f_{\dot{Q}}$and f_m including HP characteristics.
+ Suggest a range of exergy-optimal configurations.

3 Determine the best possible design.

+ Apply economic analysis to a set of optimal solutions.
+ Investigate the limiting technical constraints.

Simple model, equal heat pump efficiency

+ One combination of $f_{\dot{Q}}$ and f_m optimizes the system efficiency.
+ It is observed that this occurs when the HEX is balanced and there is no exergy destruction related to the mixing.

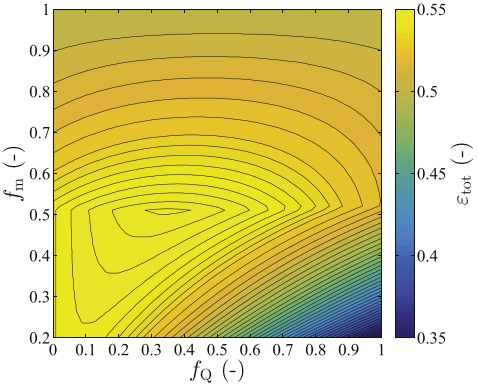

(a) Two HPs with equal exergetic efficiency and a direct HEX with a pinch temperature difference of 5 K.

Including HACHP characteristics

+ One combination of $f_{\dot{Q}}$ and f_m optimizes the system efficiency.
+ The difference in HPs efficiency is low enough to favour the serial connection.
+ Economic analysis was applied to $f_{\dot{Q}}$ from 0.2 to 0.6 and the optimal value of f_m.

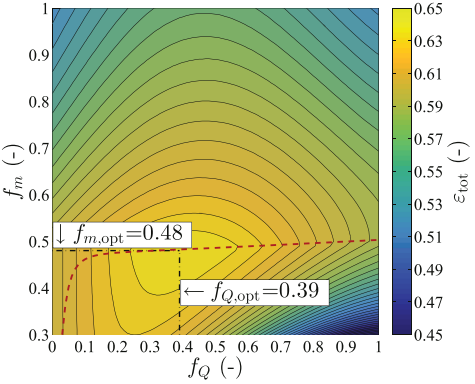

(a) Two HPs with realistic exergetic efficiency and a direct HEX with a pinch temperature difference of 5 K.

Technical Constraints

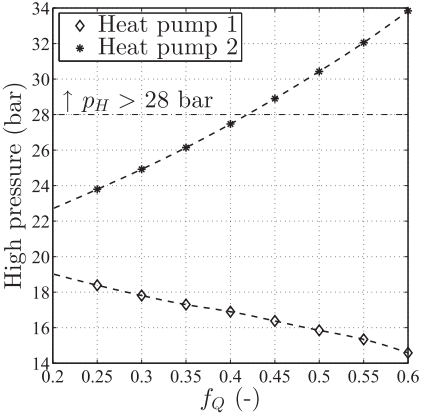

(a) High pressure of HP1 and HP2.

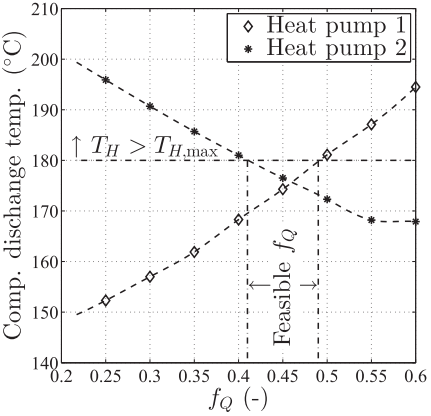

(b) Compressor discharge temperature of HP1 and HP2.

Economic analysis

+ The suggested design leads to total exergetic efficiency of 0.63, this is within 2 % of the theoretical economic optimum.
+ System COP of 6.1 [/] by use of HPs with COP of 4.4 [/] and 4.6 [/].

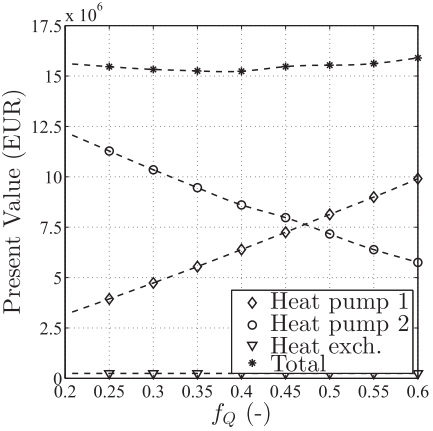

(a) Economic performance of the two HACHPs and HEX

Agenda

- Introduction
  - Expected share of HPs in Greater Copenhagen DH system
- The SVAF project
  - Two 5 MW HPs in Copenhagen
  - Vapour compression heat pumps in finite reservoirs
  - Heat pumps in combined heat and power systems
  - Economic considerations regarding serial HPs
- Utilisation of a geothermal heat source
  - Suggested configuration for direct heat exchange and HPs
  - Method
  - Results
- Utilisation of waste- and sea water as heat source
  - Two stage Ammonia heat pumps with oil-cooling
  - Examples of 3 suggested configurations
- Future work in the SVAF project

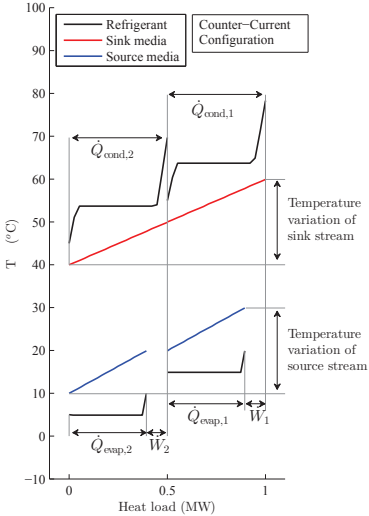

Two stage vapour compression heat pumps

- Heat exchanger network on the sink side influences COP, investment and part-load operation.
- Generic recommendations needed to limit amount of feasible configurations.
- Recommended configuration is different for different heat sink temperature, sink temperature glides and source temperatures.

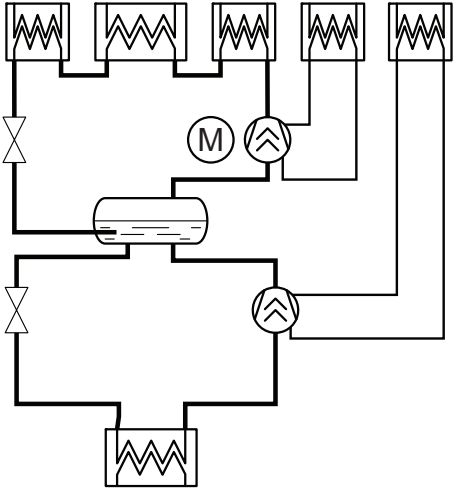

(a) Principle sketch of the VCHP - Integration with heat sink not fixed

Examples of 3 suggested configurations

- Configuration # 1

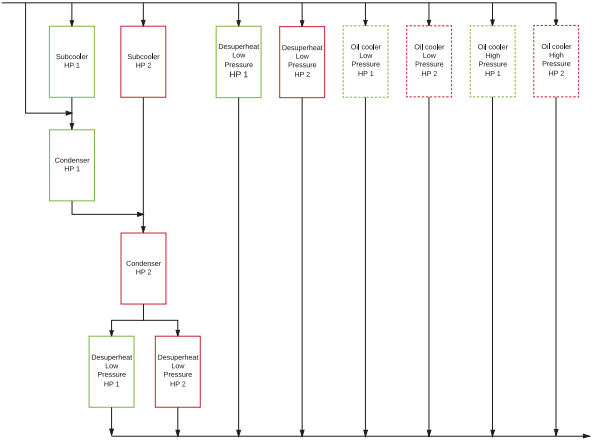

(a) Principle sketch of configuration # 1

Examples of 3 suggested configurations

- Configuration # 2

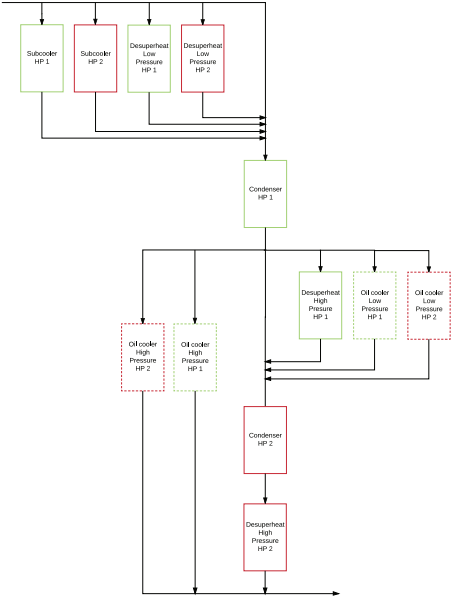

(a) Principle sketch of configuration # 2

Examples of 3 suggested configurations

- Configuration # 3

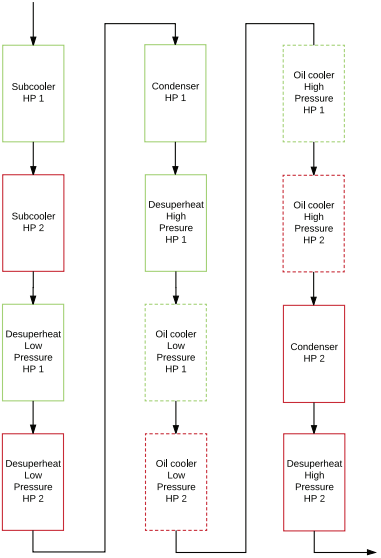

(a) Principle sketch of configuration # 3

Examples of 3 suggested configurations

- Configuration # 3

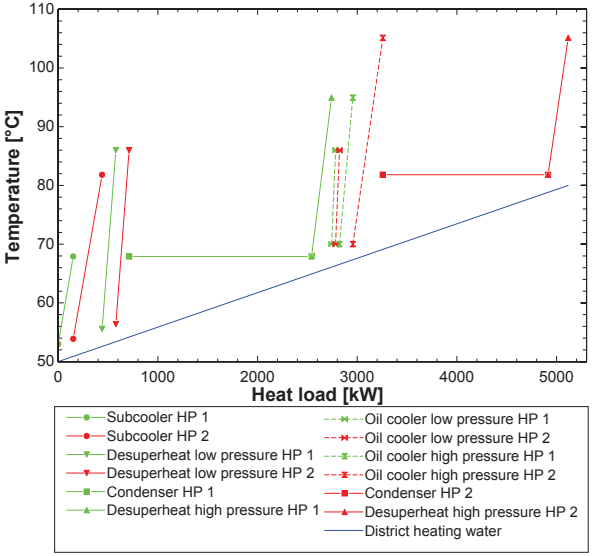

(a) Temperature heat load diagram of configuration # 3

Comparison of 3 suggested configurations

Table: Key Indicators for optimised configuration at DH temperatures 80/50

	Share HP_1 [/]	System COP [/]	Swept Volume $[m^3/h]$	UA $[W/K]$
Configuration # 1	0.48	3.53	5914 (4364/1550)	1481
Configuration # 2	0.53	3.52	5900 (4362/1538)	1619
Configuration # 3	0.49	3.49	5854 (4311/1642)	1566

- Well designed heat exchanger network on the sink side has limited influences to COP and investment.
- Performance during part-load operation may be significantly changed (ongoing).
- Yearly performance and investment characteristics needed to evaluate the optimal solution (ongoing).

Agenda

- Introduction
  - Expected share of HPs in Greater Copenhagen DH system
- The SVAF project
  - Two 5 MW HPs in Copenhagen
  - Vapour compression heat pumps in finite reservoirs
  - Heat pumps in combined heat and power systems
  - Economic considerations regarding serial HPs
- Utilisation of a geothermal heat source
  - Suggested configuration for direct heat exchange and HPs
  - Method
  - Results
- Utilisation of waste- and sea water as heat source
  - Two stage Ammonia heat pumps with oil-cooling
  - Examples of 3 suggested configurations
- Future work in the SVAF project

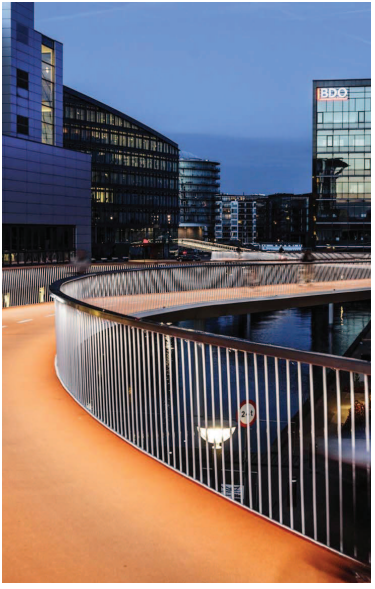

Future work in the SVAF project

- Validation of HP models with real plant data with extensive test programme.
- Generic mapping of performance of potential configurations of heat pumps.
- Decision support tool for heat pump selection.
- HP design for large-scale application (eg. 40 MW).
- Detailed knowledge of heat pumps for part load and dynamical operation.
- The use of heat pumps in Smart Energy System operation.

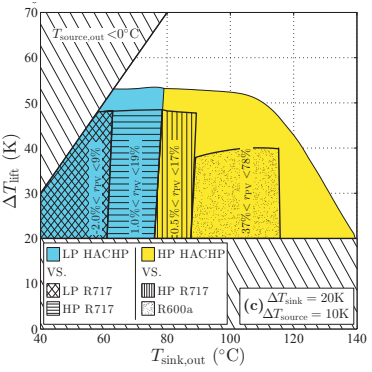

(a) Example of Working Domain analysis

Thank you for your attention

This research project is financially funded by EUDP (Energy Technology Development and Demonstration). Project title: “Experimental development of electric heat pumps in the Greater Copenhagen DH system - Phase 2.

If questions, new ideas or interest in new projects: tsom@mek.dtu.dk