Downloaded from orbit.dtu.dk on: Apr 20, 2024

DTU Library

Single-Source AlGaAs Frequency Comb Transmitter for 661 Tbit/s Data Transmission in a 30-core Fiber

Hu, Hao; Da Ros, Francesco; Ye, Feihong; Pu, Minhao; Ingerslev, Kasper; Porto da Silva, Edson; Nooruzzaman, Md; Amma, Yoshimichi; Sasaki, Yusuke; Mizuno, Takayuki

Total number of authors:
19

Published in:
CLEO: Applications and Technology 2016

Link to article, DOI:
10.1364/CLEO_AT.2016.JTh4C.1

Publication date:
2016

Document Version
Peer reviewed version

Link back to DTU Orbit

Citation (APA):
Hu, H., Da Ros, F., Ye, F., Pu, M., Ingerslev, K., Porto da Silva, E., Nooruzzaman, M., Amma, Y., Sasaki, Y., Mizuno, T., Miyamoto, Y., Ottaviano, L., Semenova, E., Guan, P., Zibar, D., Galili, M., Yvind, K., Oxenløwe, L. K., & Morioka, T. (2016). Single-Source AlGaAs Frequency Comb Transmitter for 661 Tbit/s Data Transmission in a 30-core Fiber. In *CLEO: Applications and Technology 2016* Optical Society of America (OSA). https://doi.org/10.1364/CLEO_AT.2016.JTh4C.1

General rights
Copyright and moral rights for the publications made accessible in the public portal are retained by the authors and/or other copyright owners and it is a condition of accessing publications that users recognise and abide by the legal requirements associated with these rights.

- Users may download and print one copy of any publication from the public portal for the purpose of private study or research.
- You may not further distribute the material or use it for any profit-making activity or commercial gain
- You may freely distribute the URL identifying the publication in the public portal

If you believe that this document breaches copyright please contact us providing details, and we will remove access to the work immediately and investigate your claim.

Single-Source AlGaAs Frequency Comb Transmitter for 661 Tbit/s Data Transmission in a 30-core Fiber

Hao Hu[1], Francesco Da Ros[1], Feihong Ye[1], Minhao Pu[1], Kasper Ingerslev[1], Edson Porto da Silva[1], Md. Nooruzzaman[1], Yoshimichi Amma[2], Yusuke Sasaki[2], Takayuki Mizuno[3], Yutaka Miyamoto[3], Luisa Ottaviano[1], Elizaveta Semenova[1], Pengyu Guan[1], Darko Zibar[1], Michael Galili[1], Kresten Yvind[1], Leif K. Oxenløwe[1], and Toshio Morioka[1]

[1]*DTU Fotonik, Department of Photonics Engineering, Technical University of Denmark, DK-2800, Lyngby, Denmark*
[2]*Advanced Technology Laboratory, Fujikura Ltd., Sakura, Chiba, 285-8550, Japan*
[3]*NTT Network Innovation Laboratories, NTT Corporation, Hikari-no-oka, Yokosuka, Kanagawa, 239-0847, Japan*
E-mail: huhao@fotonik.dtu.dk

Abstract: We demonstrate an AlGaAs-on-insulator nano-waveguide-based frequency comb with high OSNR enabling a single-source to fully load a 9.6-km heterogeneous 30-core fibre with 661 Tbit/s data achieved by 30xcores, 80xWDM, 40 Gbaud, and PDM-16QAM.

OCIS codes: (060.2330) Fiber optics communications; (060.4230) Multiplexing.

1. Introduction

With the introduction of space-division multiplexing (SDM), the world has seen an explosion in reported records of data transmission throughput, such as the accomplishment of crossing the 1 Pbit/s border in 2012 [1-2]. As cost and energy consumption are becoming limiting factors in high-capacity systems, using fewer lasers with less energy consumption grows desirable and frequency comb based single source transmission has attracted great research interest [3-6]. In this paper, we present the first photonic-chip based frequency comb, relying on spectral broadening of a mode-locked laser comb in an AlGaAs-on-insulator (AlGaAsOI) nano-waveguide, with a sufficient comb output power to support several hundred Tbit/s of optical data. The high comb OSNR allows us to send the 80 WDM PDM channels over 30 spatial channels, and we demonstrate successful 9.6 km transmission in a heterogeneous 30-core fiber reaching a total capacity of 661 Tbit/s.

2. SPM based frequency comb generation in an AlGaAsOI nano-waveguide

The AlGaAsOI nano-waveguide (Fig. 1(a)) has recently emerged as an ultra-efficient nonlinear medium, since it combines high intrinsic material nonlinearity (on the order of 10^{-17} W/m^2), a high-index contrast as silicon-on-insulator, and low linear loss [7]. In addition, the bandgap of AlGaAs can be engineered by changing the Al concentration to avoid two-photon absorption (TPA) at telecom wavelengths. All of this renders AlGaAsOI nano-waveguide a good source candidate for self-phase modulation (SPM) based optical frequency comb generation.

3. Experimental setup and results

The experimental setup is shown in Fig. 1 (c). The single source laser in the transmitter is an Erbium glass oscillating modelocked laser, which produces 10-GHz pulses (1542 nm, 1.5-ps FWHM), with a spectrum as shown in Fig. 1 (d). The pulses are amplified and used to generate an optical frequency comb based on SPM in the AlGaAsOI photonic chip (Fig. 1 (b)), with an average launched power of 19.3 dBm (peak power of ~5.6 W). Fig. 1(e) shows the broadened spectrum at the output of the AlGaAsOI nano-waveguide, which has a 20-dB bandwidth of ~44 nm.

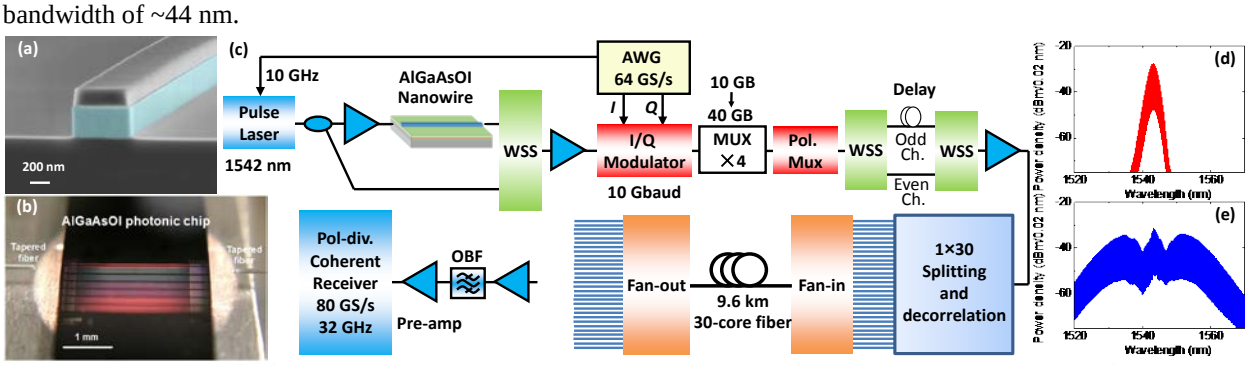

Fig. 1. (a) SEM picture of a fabricated AlGaAsOI nano-waveguide (denoted by the artificial blue color). (b) Photograph of the AlGaAsOI photonic chip. (c) Schematic of the experimental setup for the 661 Tbit/s single-source AlGaAs frequency comb transmitter for 30-core transmission demonstration. (d) Input mode locked laser pulse spectrum to AlGaAs nano-waveguide, and (e) the corresponding output frequency comb spectrum.

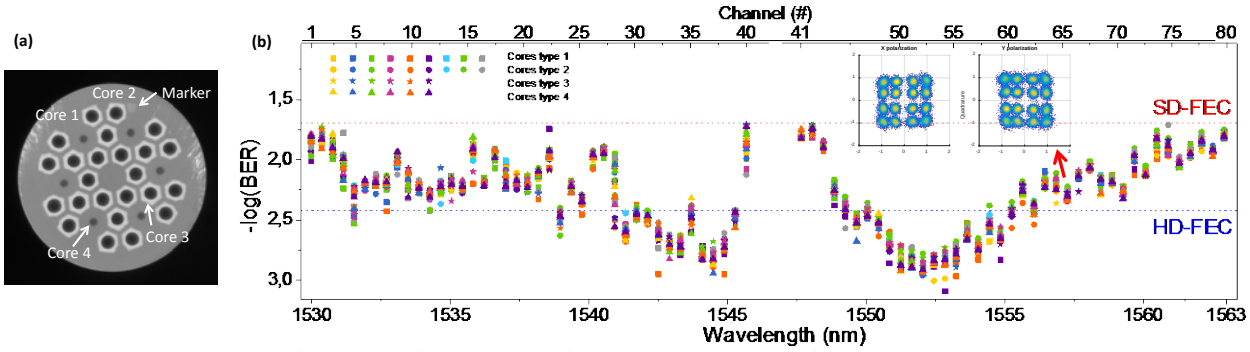

Fig. 2. (a) Cross-sectional view of the 30-core fiber; (b) BERs of all the 30 spatial channels for 80 measured wavelengths between 1529.97 nm and 1562.92 nm. 80 wavelengths have the BERs below SD-FEC limit of which 22 wavelengths have the BERs even below HD-FEC limit for all the 30 SDM sub-channels. Inset: constellation diagram of the 66th WDM channel after the transmission.

The estimated OSNR is ~ 43 dB at 1552 nm and ~ 30 dB at 1563 nm. The broadened spectrum is equalized in a wavelength selective switch (WSS) and the inhomogeneous part (from 1540.73 nm to 1545.87 nm) in the center is replaced by the original spectrum from the mode-locked laser through another path, which results in a flat and stable frequency comb [3]. The generated frequency comb with 10 GHz spacing is modulated with 10 Gbaud 16QAM in a standard IQ modulator driven by a 60 Gsample/s arbitrary waveform generator (AWG). The modulated 10 Gbaud 16QAM signal is multiplexed in time to 40 Gbaud using a passive fiber-delay multiplexer (MUX ×4) and then polarization multiplexed to the resulting 320 Gbit/s PDM-16QAM signal.

To generate a WDM signal with 50 GHz spacing, the broadened spectrum is spectrally sliced into odd and even channels and separated into two paths using a second WSS. The delay difference between the two paths is 7.5 ns in order to de-correlate the odd and even channels. The WSS is programmed for rectangular filtering with a bandwidth of 40 GHz and 50 GHz spacing, in order to generate 40 Gbaud Nyquist-OTDM PDM-16QAM signals for all the WDM carriers. The odd and even WDM channels are recombined using a third WSS. 30 de-correlated SDM channels are then generated using splitters, amplifiers and delays (at least 2.5 ns between SDM channels) and then launched into the 9.6-km 30-core single-mode fiber through a 3D-waveguide based fan-in device. The launched power for each core is between 14-18 dBm accounting for loss-variations in the fan-in/fan-out from 5 dB to 8 dB.

The heterogeneous 30-core fiber has four different types of cores, as shown in Fig. 2 (a), to realize the high-density core arrangement with low cross-talk (XT) [8]. The 30-core fiber has A_{eff} of ~80 μm^2 and low XT of below -50 dB at 9.6 km. The 30 cores are arranged within the limited cladding diameter of 228 μm.

At the output of the 30-core fiber, the 30 spatial channels are demultiplexed using another 3D-waveguide based fan-out device. A tunable bandpass filter with a bandwidth of 50 GHz is used to select each WDM channel. The selected WDM channels are detected with a coherent receiver followed by a digital sampling oscilloscope.

Fig. 2 (b) shows the BERs of all the 30 spatial channels for the 80 measured wavelengths between 1529.97 nm and 1562.92 nm (for each WDM/SDM channel, BERs of 2 polarizations and 4 OTDM tributaries are averaged). All channels are present in all cores simultaneously ensuring the validity of the claimed transmission throughput. 80 WDM channels are below FEC limits, 58 below SD-FEC (20% overhead) and 22 below HD-FEC (7% overhead), yielding a line rate of 768 Tbit/s and a net rate after FEC overhead subtraction of 661 Tbit/s.

4. Conclusions

We have demonstrated the first photonic chip based single-source transmitter based on an AlGaAsOI nano-waveguide frequency comb capable of carrying 661 Tbit/s data in a fully loaded 30-core fiber. This is the highest reported amount of data carried on the light generated from a chip-based single-source transmitter, and we demonstrate successful 9.6 km transmission. We employ 16QAM modulation, PDM and WDM of 40 Gbaud channels in addition to 30xSDM and all 2400 PDM-16QAM channels are simultaneously generated, transmitted and individually measured to be below the FEC threshold after transmission.

5. Acknowledgements

SPOC research centre of excellence, ref DNRF123, NATEC Villum centre of excellence and EU-Japan coordinated R&D project on "Scalable And Flexible optical Architecture for Reconfigurable Infrastructure (SAFARI)" commissioned by the MIC, Japan and EC Horizon 2020.

6. References

[1] H. Takara et al., ECOC 2012, paper Th.3.C.1 (2012).
[2] D. Qian et al., FiO 2012, paper FW6C.3 (2012).
[3] D. Hillerkuss et al, NPHOT, 5, 364-371 (2011).
[4] V. Ataie et al, OFC 2014, postdeadline paper Th5B.7 (2014)).
[5] H. Hu et al, CLEO 2014 postdeadline paper JTh5B.10 (2014)
[6] B. Puttnam et al, ECOC 2015, paper PDP.3.1 (2015).
[7] M. Pu et al, OFC 2015, postdeadline paper Th5A.3 (2015).
[8] Y. Amma et al, OFC 2015, paper Th4C.4 (2015).