Coordinated Control of Wind Turbines in Diode-Rectifier-connected Offshore Wind Power Plants with Frequency Support Capability

Arasteh, Amir; Bidadfar, Ali; Saborío-Romano, Oscar; Cutululis, Nicolaos Antonio

Published in:
Proceedings of the 18th Wind Integration Workshop

Publication date:
2019

Document Version
Peer reviewed version

Coordinated Control of Wind Turbines in Diode-Rectifier-connected Offshore Wind Power Plants with Frequency Support Capability

Amir Arasteh, Ali Bidadfar, Oscar Saborío-Romano, Nicolaos A. Cutululis

Department of Wind Energy
Technical University of Denmark
Risø Campus, Roskilde, Denmark
Email: amia@dtu.dk

***Abstract*—Lower costs and higher reliability make diode rectifiers (DRs) a promising alternative for connecting offshore wind power plants to HVdc networks. However, such offshore substations lack the grid-forming capability provided by voltage source converters. Hence, the grid-side converters of type-4 (full-converter) wind turbines (WTs) have been proposed as viable candidates to take over such responsibility, apart from controlling the WT output power. In this work, a common synchronization reference (CSR) is proposed for the synchronization of such converters. Such reference is generated in the offshore HVdc substation and transmitted to the converters through the optical fibers embedded in the power cables. The proposed CSR enables the use of conventional current control for grid-forming WTs. Additionally, a scheme which combines communication-less and communication-based onshore frequency support is proposed and implemented. The proposed controls are validated by simulations under different operational scenarios.**

***Index Terms*—Common synchronization reference, diode-rectifier-based HVdc transmission, frequency support, grid-forming wind turbine control, offshore wind energy integration**

I. Introduction

Offshore Wind Power Plants (OWPPs) are a rapidly growing source of energy. As these power plants are being developed further away from the shore, their connection to the onshore network is drawing notable attention. There are two types of transmission systems in this regard: high voltage ac cables (HVac) and high voltage dc transmission (HVdc).

Currently, most OWPPs are connected to the onshore network via HVac that is the most reliable solution for the absence of power electronic devices in the transmission system. Also, it is the most cost-effective solution for short distances. However, as the distance from the shore increases the effectiveness of HVac transmission becomes controversial due to the reactive power needed to compensate cable capacitances. Above a length, depending on several factors but typically around 80-100 km, the reactive power will encompass cable sizes and makes the transmission of the active power without reactive compensators infeasible.

Dc transmission is a solution to avoid the reactive power consumed by the cables during steady-state operation. This fact makes HVdc transmission a more cost-effective technology for connecting the distant OWPPs to the onshore networks [1], [2]. There are three types of HVdc transmission technologies, namely: voltage-source-converter-based HVdc (VSC-HVdc), thyristor-based line commutated converter HVdc (LCC-HVdc) and diode-rectifier-based HVdc (DR-HVdc).

Among these HVdc technologies, advantages such as independent control of voltage and power, lower harmonics, and grid-forming capability have made VSC-HVdc a more favorable solution for connecting OWPP to shore. This HVdc technology was introduced in 1997, and has undergone considerable development since then [3]. LCC-HVdc is the most mature and common technology for transferring power onshore, but, the grid forming capability of VSC-HVdc, without substantial increases in the cost, makes it a more suitable solution for low inertia systems such as OWPPs. Having an offshore ac grid, the WTs can work in grid following mode relying on the grid formed by the offshore substation. In fact, only VSC-HVdc is practically implemented for OWPPs and several remote OWPPs in the North Sea are connected to the shore via VSC-HVdc since it is capable of creating an ac grid.

The other HVdc technology, DR-HVdc, is a newly proposed HVdc transmission for connecting OWPPs to the onshore network [4]–[11]. In this technology, the offshore substation is realized with diode rectifier and VSC is used only in the onshore substation. Significant cost reduction as well as smaller platform footprint, and higher reliability, compared to VSC-HVdc and even LCC-HVdc, make the DR-HVdc a viable solution for future OWPPs [6]. Consequently, control of DR-connected WT converters has attracted a significant amount of attention during the last decade.

Similar to LCC-HVdc, DR-HVdc is not capable of forming an ac offshore grid. The grid-side converters of type-4 (full-converter) WTs have been proposed as viable candidates to take over such responsibility besides controlling the WT output power when connected to DR-HVdc. However, parallel operation of DR-connected grid-forming WTs presents several

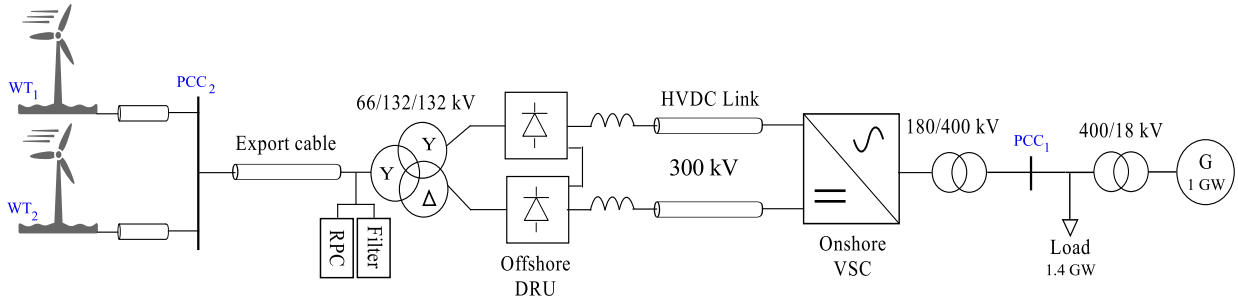

Figure 1. Overview of the studied system

challenges. First, the power flow through the DRs is determined by the differences in voltage amplitude at terminals of the DRs. This entails a fundamental change in WT converter control, inverting the usual coupling of active power with voltage angle and reactive power with voltage amplitude. Second, lacking a strong grid in the system and, consequently, having more than one grid-forming unit operating in parallel, the synchronization is challenging with DR-HVdc.

One of the proposed solutions for synchronizing WTs in DR-connected wind power plants (WPPs) relies on a fixed frequency reference (FixRef) for all WTs, which is generated based on the global positioning system (GPS) signals [7]. In this way, the conventional vector current control is applicable for grid-forming WT converter which is beneficial in limiting current while possibility of forming an ac offshore grid.

Having a stable ac offshore grid, the DR-HVdc connected WPPs are capable of providing frequency support to the onshore network. The communication-based (CB) frequency support from DR-connected OWPPs to onshore ac network has been studied in [8]–[10]. Such scheme relies on the onshore frequency signal being directly communicated to the WPP. In the other scheme, communication-less (CL), the onshore frequency deviation leads to HVdc voltage variation by a frequency-voltage droop at the onshore substation. Subsequently, variation of the HVdc voltage is reflected in the ac offshore grid through DR substation. In this way, a droop can be defined relating power reference of WTs to offshore ac voltage for frequency support purposes [11]. The main disadvantage of the CB scheme for OWPPs is the long distance communication from onshore substation to the OWPP which reduces the scheme's reliability. On the other hand, the main drawback of the CL scheme is its lesser accuracy respect to CB scheme due to the electrical components in between [12].

The present work proposes a common synchronization reference (CSR), which is generated in the offshore HVdc substation and distributed among the WTs through optical fibers embedded in the power cables. Respect to the synchronization method discussed in [7], the proposed CSR has the advantage of circumventing necessity of placing GPS receivers at the OWPP.

Also, a combination of CL and CB schemes is proposed in this work to provide frequency support from such OWPPs to the onshore network. Namely, the communication-less scheme is used to convey onshore frequency deviation to the offshore HVdc substation. Then, the variation of the HVdc voltage at terminals of the offshore substation is measured and communicated to the WPP. CB scheme between offshore substation and the onshore substation is beneficial in avoiding long distance communication. On the ohter side, communicating the droop signal to the WPP, from offshore substation, circumvents necessity of estimating voltage drop across the electrical components between the offshore substation and WTs.

The rest of the paper is structured as follows. In section II, the studied system and the control strategy of the WTs are presented. Section III provides simulation results of the studied system implemented in MATLAB/Simulink to verify the proposal. Lastly, in section IV, the conclusions are given.

II. Modelling and Control

An overview of the studied system is depicted in Fig. 1, which is based on the one described in [13], [14]. It consists of a 400 MW OWPP connected to the onshore network via DR-HVdc. For the sake of simplicity, the WPP is aggregated as two 200 MW wind turbines. The OWPP, along with an onshore power plant, supply a load of 1.4 GW. Fixed reactive power compensation is used at the ac side of the offshore substation (RPC in Fig. 1). This RPC is designed such that the reactive power at WTs' terminal is zero for the rated power of the WPP.

A. WT control

The WTs are usually controlled in dq-domain. For that, a reference angle is required for dq-axis synchronization. When the WTs are connected to a strong grid, the grid voltage is stable enough so that the angle of it can be used as the synchronizing angle. However, in a WPP connected to DR-HVdc, there is no ac grid to rely on for synchronization. Hence, the WTs, or some of them, are supposed to form the grid. In this work, synchronization of the WTs is realized by a common synchronization reference generated in the offshore substation. Fig. 2 is a simple illustration of generation and distribution of CSR in the OWPP. There would be a communication delay that may vary depending on hardware delays as well as the distance of the WTs from the offshore substation. However, the difference between delays can be compensated by introducing a supplementary delay in the

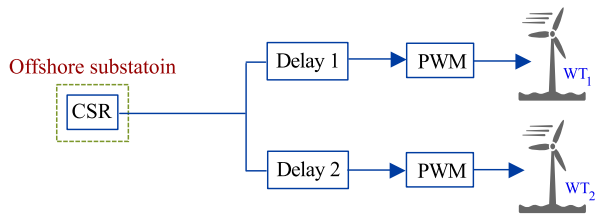

Figure 2. CSR generation at offshore substation and distribution of it among WTs

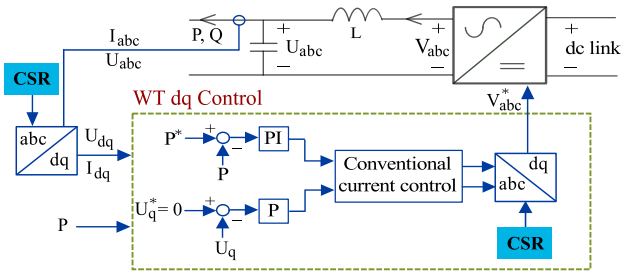

Figure 3. Grid side converter control of the WTs

controllers. For the sake of simplicity, in this work, an equal delay of 100 μs is considered for each WT.

The proposed CSR overcomes the main disadvantage of DR-HVdc by enabling the parallel operation of grid-forming converters. Having grid-forming converters offshore, it is possible to connect the WPP to DR-HVdc and benefit from the advantages of this transmission technology (cost reduction, higher reliability of the HVdc link, etc). The proposed method, respect to the FixRef method [7] in which the reference signal is obtained from GPS, is advantageous in circumventing necessity of GPS receivers. In the proposed method the optical fibers embedded inside the cables are used to transmit the CSR.

Fig. 3 depicts the implemented controller, based on the one implemented in [7]. Having CSR, conventional WT grid-side converter controls can be used with minor changes in the q-axis outer control loop. The measured voltage and current are transformed to dq-domain using the CSR. The active power is controlled by manipulating the current d-axis component. The current q-axis component is manipulated by a proportional controller, which reference, U_q^*, is zero, so that reactive power is shared among the WTs inversely-proportional to their active power generation. This strategy is beneficial in avoiding over-current in the WTs which are working close to their rated power.

The possibility of implementing conventional current control ensures that the WTs are capable to ride through fault while limiting their current which is necessary for protecting the equipment. Additionally, regarding that the synchronization signal does not rely on the offshore ac voltage, the WTs will keep the synchronization during the fault and restore to their pre-fault operating point after fault clearance.

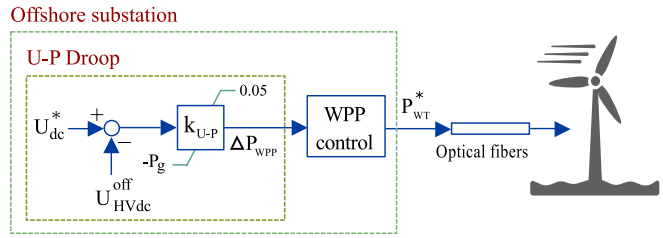

Figure 4. U-P droop control at the offshore substation and communication of the resultant power to WTs via optical fibers

B. Droop control for frequency support

To realize frequency support from WPP, a frequency-voltage (f-U) droop in the onshore substation along with a voltage-Power (U-P) droop in the offshore substation are implemented. The onshore f-U droop regulates HVdc voltage based on the onshore frequency as follows.

$$\Delta U_{dc}^{on} = k_{f-U} \cdot \Delta f^{on} \tag{1}$$

On the other side of the HVdc link, the U-P droop manipulates the reference of the WPP's active power based on HVdc voltage variation at the offshore substation as is shown in Fig. 4 and stated in 2.

$$\Delta P_{WPP} = k_{U-P} \cdot \Delta U_{dc}^{off} \tag{2}$$

The WPP control then determines the active power references for the WTs and sends them through the optical fiber cables as is depicted in Fig. 4.

Fig. 5.(a) shows equivalent model related to the frequency control of the studied system including dynamic of the governor, WPP, and transmission lines. Neglecting variation of power loss in the offshore transmission and HVdc link:

$$\Delta P_{HVdc} \approx \Delta P_{WPP} \tag{3}$$

$$\Delta U_{dc}^{off} \approx \Delta U_{dc}^{on} \tag{4}$$

therefore

$$\Delta P_{HVdc} \approx k_{U-P} \cdot \Delta U_{dc}^{on} \tag{5}$$

Substituting (1) in (5) gives:

$$\Delta P_{HVdc} \approx k_{U-P} \cdot k_{f-U} \cdot \Delta f^{on} \tag{6}$$

$k_{f-U} \cdot k_{U-P}$ can be defined as the equivalent droop gain of HVdc system ($k_{f_{HVdc}}$), so:

$$\Delta P_{HVdc} = k_{f_{HVdc}} \cdot \Delta f^{on} \tag{7}$$

In this way, the onshore frequency deviation produces a deviation in the HVdc voltage, which results in a change in the reference power of the WTs and, subsequently, changes the injected power from HVdc system to the onshore network to realize frequency support.

Fig. 5.b depicts the steady-state equivalent model related to the frequency control of the studied system neglecting the variation of losses in the transmission lines. Based on this

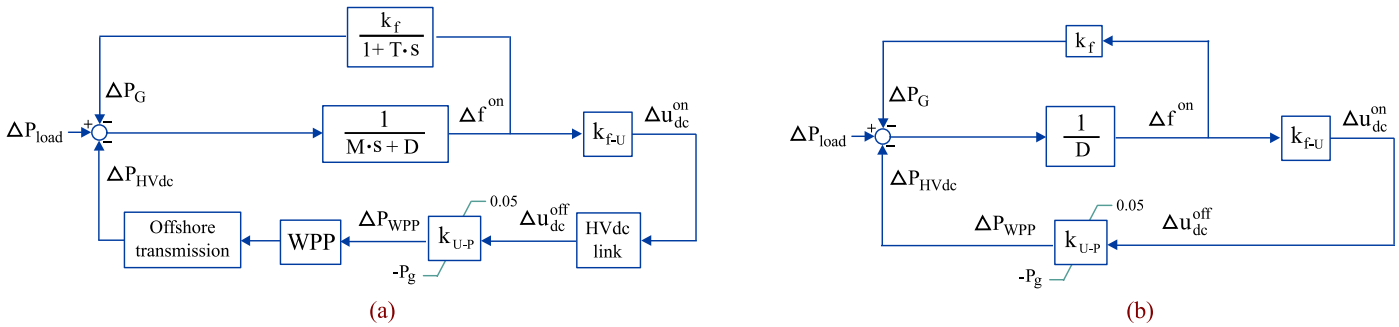

Figure 5. Equivalent model related to the frequency control of the studied system (a): including dynamics and transmission lines (b): neglecting dynamics (steady state) and transmission lines

figure, the steady-state onshore frequency deviation respect to a load step would be:

$$\Delta f^{on} = \frac{1}{D} \cdot (\Delta P_{Load} - \Delta P_G - \Delta P_{HVdc}) \tag{8}$$

in which

$$\Delta P_G = k_f \cdot \Delta f^{on} \tag{9}$$

and k_f is the frequency-Power droop gain of the governor. Substituting 7 and 9 in 8 and then simplifying gives the steady-state frequency deviation of the system.

$$\Delta f^{on} = \frac{1}{D + k_f + k_{f_{HVdc}}} \cdot \Delta P_{Load} \tag{10}$$

while without frequency support from HVdc ($k_{f_{HVdc}} = 0$), the frequency deviation would be:

$$\Delta f^{on} = \frac{1}{D + k_f} \cdot \Delta P_{Load} \tag{11}$$

Hence, the frequency support from the WPP helps reducing steady-state frequency deviation in the onshore network.

III. Simulation Results

The studied system with the proposed control is implemented in Matlab/Simulink, and the results for different operating conditions are presented in this section.

A. WT active power reference changes

Fig. 6 depicts the active and reactive power of each WT for changes in the references of active power. In the first second, both of them are generating 160 MW (80 percent of their rated power) and provide -30 MVAR of reactive power. The reason for negative reactive power in this operating point is that when the generated active power reduces, on one hand, reactive power consumed by inductive components (inductors of transformers, cables, and filters) reduces since their reactive power depends on the flowing current. On the other hand, the reactive power of the RPC, and capacitors of the cables and filters remain almost constant since voltage across them is approximately constant during different operating conditions. Hence, in a DR-connected WPP with fixed reactive power compensator, when the generated power is less than the rated power of WPP, there will be a specific amount of surplussed

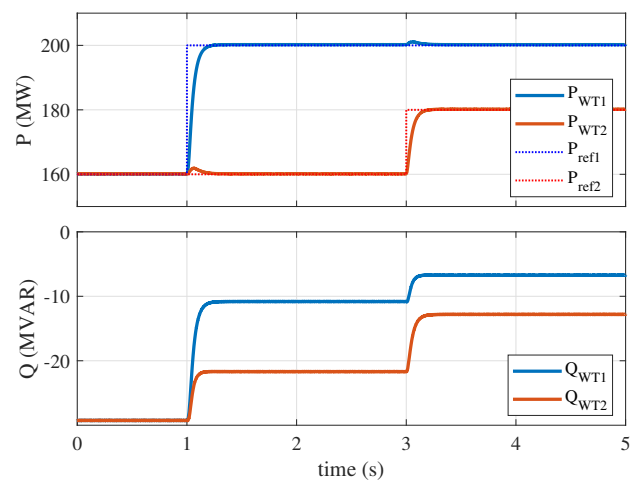

Figure 6. Active and reactive power of WTs in various conditions

reactive power in the offshore grid. Regarding that WTs are the only controllable components in this network (DRs are not capable of controlling active and reactive power), the WTs took over the responsibility of balancing reactive power in the offshore ac grid. An alternative solution could be using a variable reactor as RPC. However, to evaluate the capability of the implemented controller in reactive power sharing, a fixed RPC is used in this work. As Fig. 6 shows, when the WTs generate same active power (160 MW in the first second of Fig. 6), they share the reactive power equally. At $t = 2s$, reference power of WT_1 is increased to rated power and two seconds later the reference of WT_2 is increased by 20 MW. Note that reference power of the WTs is changed sharply, neglecting the rate limiter of the reference power.

The results indicate that, in the studies system, setting the deviation of U_q as the reference for i_q shares the reactive power between the WTs in the way that the WT with less active power generation overtakes more reactive power compensation. Considering that the studied offshore network is designed such that reactive power of the WTs is zero during rated operation, U_q is zero at the terminal of the WTs in this condition. Essentially, WT deviation from its rated operation leads to a non-zero U_q because the flowing current at the

terminal of it changes. The more the active power deviates from its rated value, the more would be the amplitude of U_q. Setting $U_q^* = 0$ (as is depicted in Fig. 3) means giving deviation of U_q as the reference value for i_q. Consequently, the WT which generates less active power (in other words, deviates more from its rated active power), receives a larger value as i_q reference and consequently takes over a larger portion of required reactive power.

B. Operation during fault

To investigate performance of the implemented control in fault condition, a three phase fault with a duration of 200 ms is applied at the middle of the export cable. Voltage and current at PCC_2 (shown in Fig. 1) as well as active and reactive power of WTs are shown in Fig. 7. As was expected,

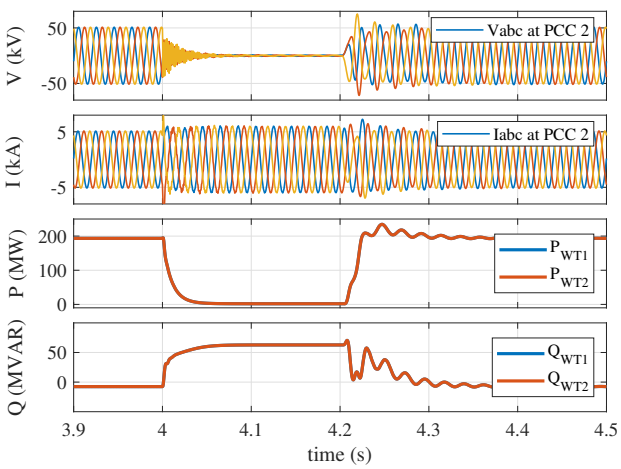

Figure 7. Voltage/current at PCC_2 and active/reactive power of WTs during fault condition

the WTs remain synchronized during fault and restore after fault clearance since the synchronization signal is not relying on the ac voltage. Also, the WTs show a good fault ride through capability in keeping their current limited thanks to the conventional current control. During the fault, the WTs cannot inject active power to the grid due to the negligible resistance between the WTs and the faulted point. On the other hand, the inductances in between (cable, transformer, and filter) leads to a none zero U_q and, consequently, a non zero reactive power at the WTs terminal. All in all, supposing that the active power of WTs is somehow dissipated during the fault (in the dc chopper of the WTs, for example), the proposed control provides a strong FRT capability.

C. Frequency support provision from HVdc

Assuming that the wind turbines are downward regulated and have 0.05 percents of headroom power, the HVdc is capable of providing 0.05 of its rated power (20 MW) for frequency support. In this regard, the upper limit for frequency droop is considered as 0.05. In DRU-connected WPPs, active power flow depends on the HVdc voltage, so a smaller gain is chosen for f-U droop ($k_{f-U} = 1$) respect to U-P droop

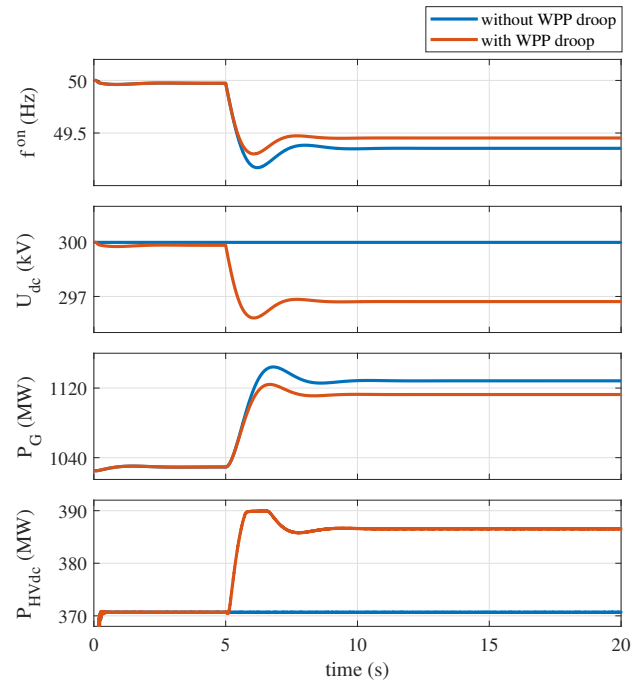

Figure 8. Impact of the WPP frequency support on response of the system to a step in the load

($k_{U-P} = 5$) to reduce variation of the HVdc voltage during onshore frequency deviations.

Fig. 8 shows onshore frequency, HVdc voltage, generator power, and HVdc power in the studied system with a 100 MW step up in the load at $t = 5s$. As this figure illustrates, frequency support from the WPP improves frequency response of the system. Without frequency support from WPP, the HVdc voltage remains constant, so the reference of the power to WTs, and consequently, HVdc power do not change. In this case, merely the onshore generator provides frequency support to the system.

Having the frequency support from WPP, onshore frequency drop changes the HVdc voltage and the WPP contributes to frequency support by increasing its generated power. The supplied power by HVdc is trimmed at 390 MW because of the 0.05 limit applied in P-U droop of WPP. In fact, the active power of the WPP is curtailed at 400 MW and the plotted power which is the injected power from HVdc to the onshore network is curtailed at 390 MW due to the transmission and conversion losses. In this scenario, onshore frequency deviation and variation of generator-power are reduced at the expense of HVdc voltage variation and curtailment of WPP power during normal operation.

IV. Conclusion

Using a common synchronization reference (CSR) was proposed for synchronizing grid-side converter of WTs in a DR-connected WPP. The simulation results confirm the applicability of the proposed CSR for controlling WTs in this type of WPPs. Synchronization of WTs with the proposed

CSR enables parallel operation of grid-forming WTs and makes the WTs capable of riding through faults and restoring their output to the pre-fault values, once the fault is cleared.

Additionally, the simulations show the effectiveness of the proposed frequency support, which is a combination of communication-less and communication-based frequency support, in improving the frequency response of the system.

V. Acknowledgement

This work has been supported by the PROMOTioN project through the European Union's Horizon 2020 research and innovation programme under grant agreement No 691714.

References

[1] P. Bresesti, W. L. Kling, R. L. Hendriks, and R. Vailati, "Hvdc connection of offshore wind farms to the transmission system," *IEEE Transactions on energy conversion*, vol. 22, no. 1, pp. 37–43, 2007.

[2] D. van Hertem, O. Gomis-Bellmunt, and J. Liang, Eds., *HVDC Grids: For Offshore and Supergrid of the Future*. Hoboken, NJ, United States: John Wiley & Sons, Mar. 2016.

[3] ABB, "HVDC Light: It's time to connect," Tech. Rep., Mar. 2013. [Online]. Available: http://new.abb.com/docs/default-source/ewea-doc/hvdc-light.pdf.

[4] R. M. Blasco-Giménez, S. C. Añó-Villalba, J. Rodríguez-D'Derlée, F. Morant-Anglada, and S. I. Bernal-Pérez, "Distributed Voltage and Frequency Control of Offshore Wind Farms Connected With a Diode-Based HVdc Link," *IEEE Transactions on Power Electronics*, vol. 25, no. 12, pp. 3095–3105, Dec. 2010.

[5] R. M. Blasco-Giménez, S. C. Añó-Villalba, J. Rodríguez-D'Derlée, S. I. Bernal-Pérez, and F. Morant-Anglada, "Diode-Based HVdc Link for the Connection of Large Offshore Wind Farms," *IEEE Transactions on Energy Conversion*, vol. 26, no. 2, pp. 615–626, Mar. 2011.

[6] S. I. Bernal-Pérez, S. C. Añó-Villalba, R. M. Blasco-Giménez, and J. Rodríguez-D'Derlée, "Efficiency and Fault Ride-Through Performance of a Diode-Rectifier- and VSC-Inverter-Based HVDC Link for Offshore Wind Farms," *IEEE Transactions on Industrial Electronics*, vol. 60, no. 6, pp. 2401–2409, Jun. 2013.

[7] C. Prignitz, H. Eckel, and S. Achenbach, "Fixref: A current control strategy for offshore wind turbines connected to different types of hvdc transmission," in *Proceedings of the 15th Wind Integration Workshop, Vienna, Austria*, 2016, pp. 15–17.

[8] O. Saboríο-Romano, A. Bidadfar, J. N. Sakamuri, Ö. Göksu, and N. A. Cutululis, "Primary frequency response from offshore wind farms connected to hvdc via diode rectifiers," in *13th IEEE PowerTech Milano 2019: Leading innovation for energy transition*, 2019.

[9] O. Saboríο-Romano, A. Bidadfar, Ö. Göksu, and N. A. Cutululis, "Frequency support from owpps connected to hvdc via diode rectifiers," in *16th International Workshop on Large-Scale Integration of Wind Power into Power Systems as well as on Transmission Networks for Offshore Wind Power Plants*, 2017.

[10] PROMOTioN, "Deliverable 3.5: Performance of ancillary services provision from WFs connected to DR-HVDC," Project Deliverable, Jan. 2018. [Online]. Available: https://www.promotion-offshore.net/fileadmin/PDFs/D3.5_PROMOTioN_Performance_of_ancillary_services_provision_from_WFs_connected_to_DR-HVDC.pdf.

[11] L. Xie, L. Yao, Y. Li, L. Xu, Z. Wang, C. Wei, and C. Fan, "Frequency regulation participation of offshore wind farm integrated by diode-rectifer hvdc system," *The Journal of Engineering*, vol. 2019, no. 16, pp. 977–981, 2019.

[12] L. Zeni, "Power system integration of VSC-HVDC connected wind power plants: Control principles, power system services, clustering of wind power plants," PhD thesis, Technical University of Denmark, Roskilde, Denmark, Mar. 2015.

[13] PROMOTioN, "Deliverable 3.1: Detailed functional requirements to WPPs," Project Deliverable, Dec. 2016. [Online]. Available: https://www.promotion-offshore.net/fileadmin/PDFs/D3.1_PROMOTioN_Deliverable_3.1_Detailed_functional_requirements_to_WPPs.pdf.

[14] ——, "Deliverable 3.2: Specifications of the control strategies and the simulation test cases," Project Deliverable, Mar. 2017. [Online]. Available: https://www.promotion-offshore.net/fileadmin/PDFs/D3.2_Specifications_Control_strategies_and_simulation_test_cases.pdf.