Methane Production through Combined Depressurization + Hydrate Swapping method in the Sandy Porous Medium under Permafrost Temperature Conditions

Pandey, Jyoti Shanker; von Solms, Nicolas

Publication date:
2019

Document Version
Publisher's PDF, also known as Version of record

Citation (APA):
Pandey, J. S., & von Solms, N. (2019). *Methane Production through Combined Depressurization + Hydrate Swapping method in the Sandy Porous Medium under Permafrost Temperature Conditions*. Poster session presented at 33rd Annual Symposium of Society of Core Analysts, Pau, France.

DTU Chemical Engineering
Department of Chemical and Biochemical Engineering

Methane Production through Combined Depressurization + Hydrate Swapping method in the Sandy Porous Medium under Permafrost Temperature Conditions

Jyoti Shanker Pandey*, Nicolas von Solms**
*PhD Student-CERE,**Associate Professor- CERE

1- Introduction

Methane gas production recovery from gas hydrates

- Depends on the characteristic of porous media
- Production techniques.

In this work,

- Combined pressure reduction and Flue gas injection
- Permafrost temperature conditions (1°C to -5°C)
- Different porous medium

Objective

- To analysis effect of temperature on methane recovery
- To analysis effect of methane self preservation on CH_4-CO_2 swapping
- To analysis the effect of sediments on CH_4 recovery in permafrost conditions.

2- Background Information

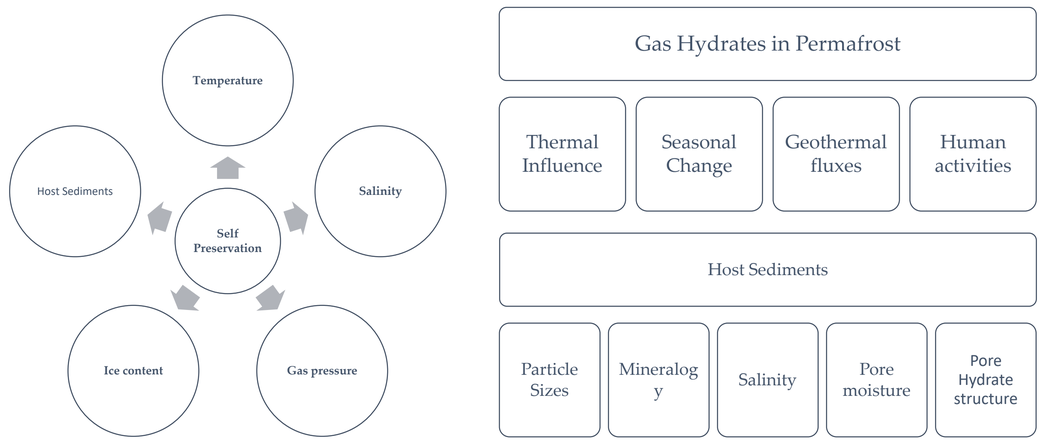

- Permafrost gas hydrate deposits are metastable state., represent mainly gas-ice hydrate system and hard to distinct from ice.
- Gas hydrate particle covered with thin ice films which prevent further hydrate dissociation.
- Presence of clay particle inhibits hydrate crystal growths. Methane hydrate formation, stabilization and preservation in frozen clay is unclear.
- Conversion of pore ice to hydrate is quite rapid below 273K.

3-Experimental Setup

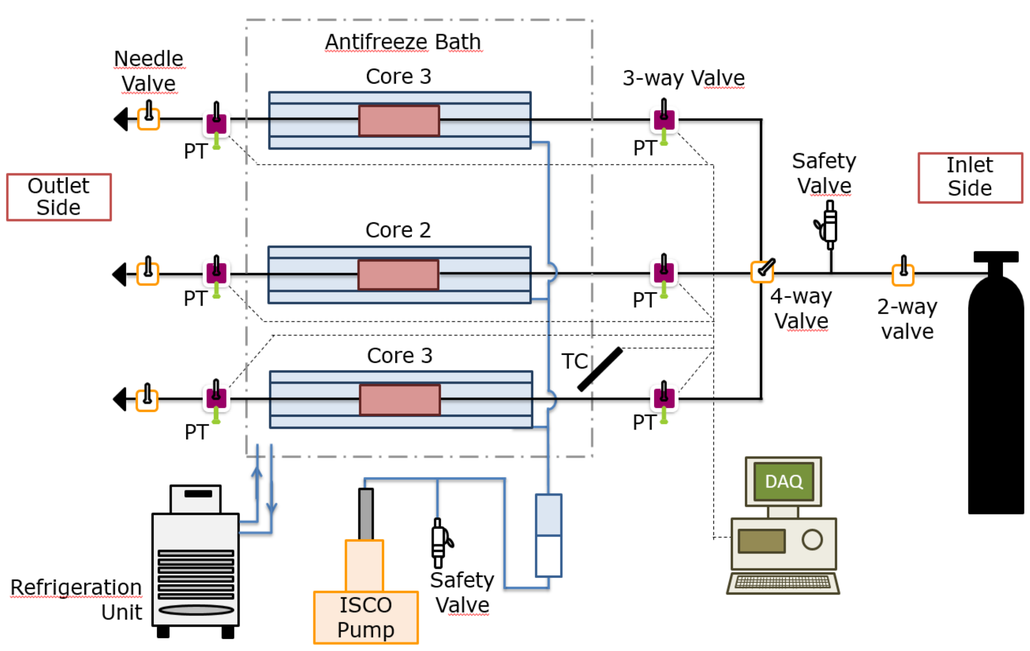

Figure 1: Systematik diagram of Core flooding setup used during the experiement.

4-Experimental Data Processing

	Methane injection pressure (in bars)	Hydrate formation temperature (°C)	Type of gas injection	Flue Gas injection pressure (in bars)	permafrost temperature (°C)
Exp-1	81	1.3	10% CO2	101	-2.36
Exp-2	94	2.4	10% CO2	98	-0.26
Exp-3	82	0.871	10% CO2	94	0.871
Exp-4	92	0.15	10% CO2	101	-4.61
Exp-5	91	3.83	30% CO2	102	-5.31
Exp-6	104	1.09	10% CO2	100	-4.35

4-Experimental Results

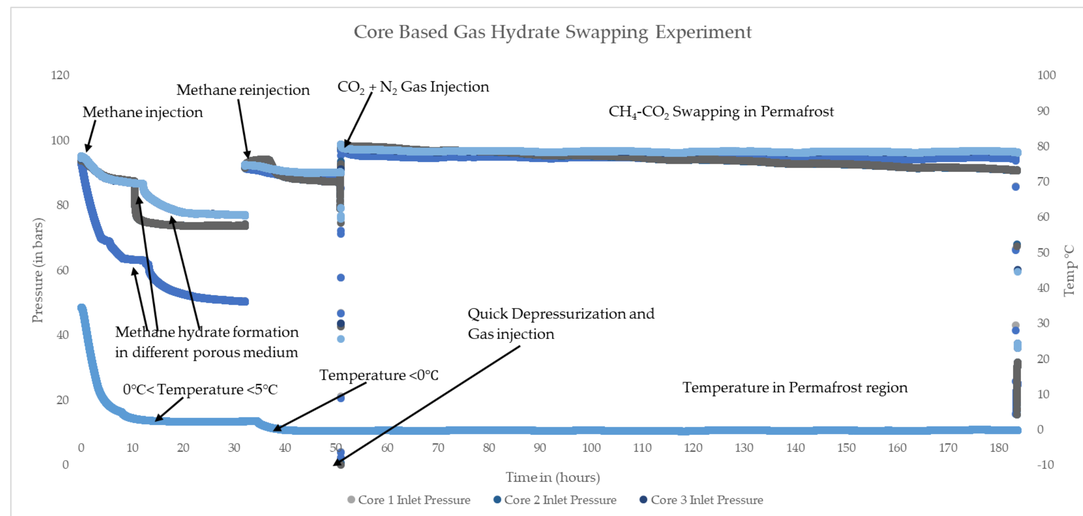

Figure 2: Typical P-T variation in core based gas hydrate swapping experiment in lab in permafrost condition.

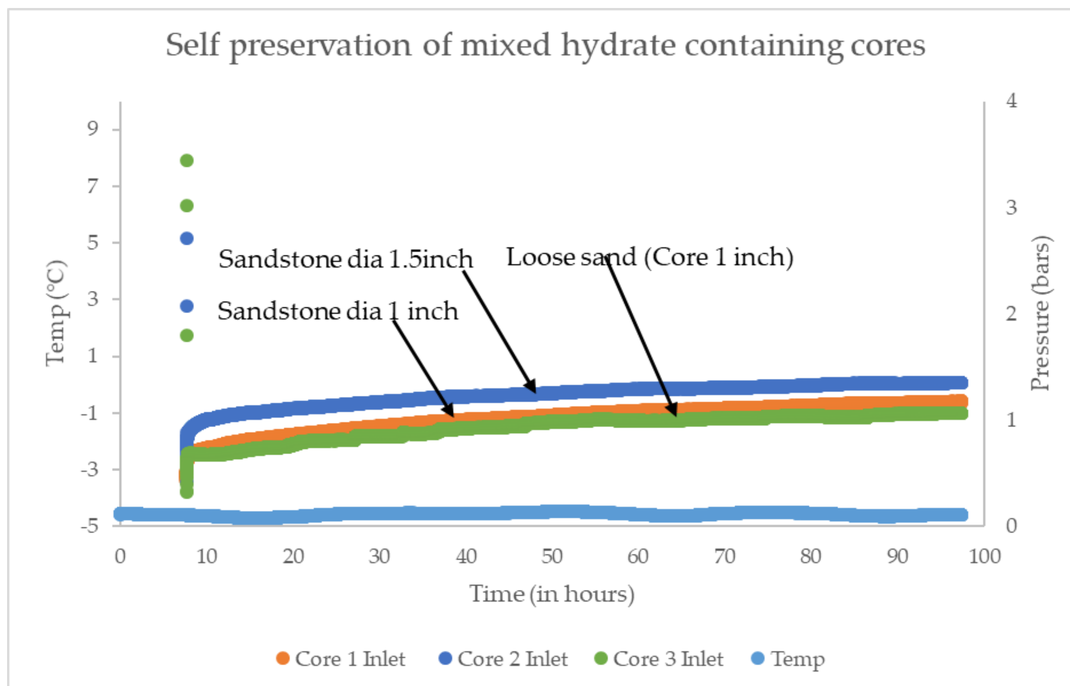

Figure 3: Typical P-T variation in core based mixed gas hydrate self preservation analysis at the end of the experiment while in permafrost condition.

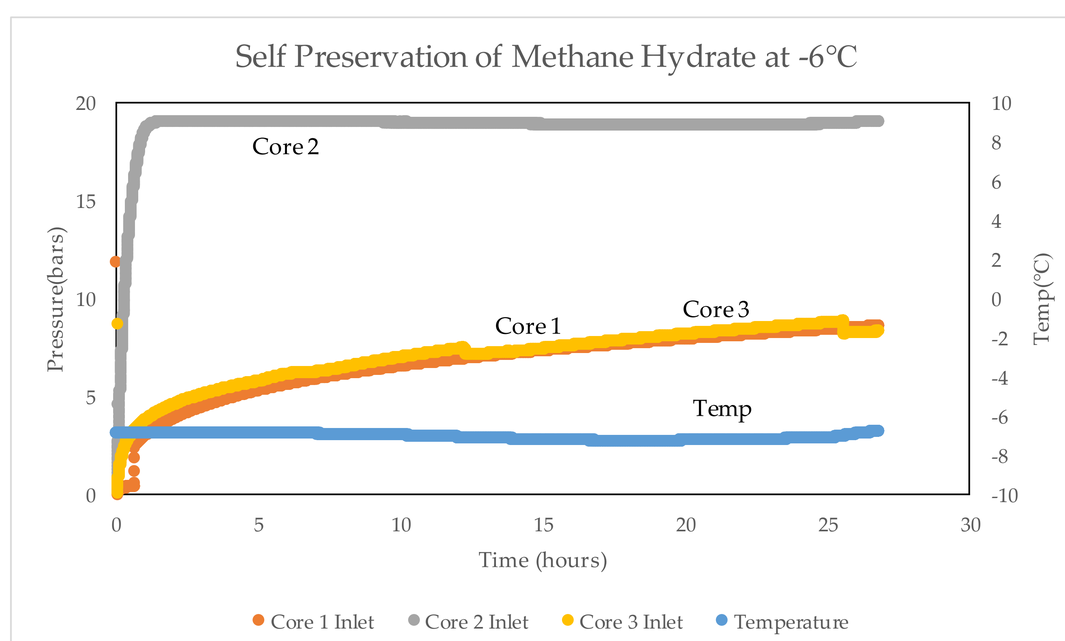

Figure 4: Typical P-T variation in core based methane hydrate self preservation analysis at the end of the experiment while in permafrost condition.

5-Conclusions

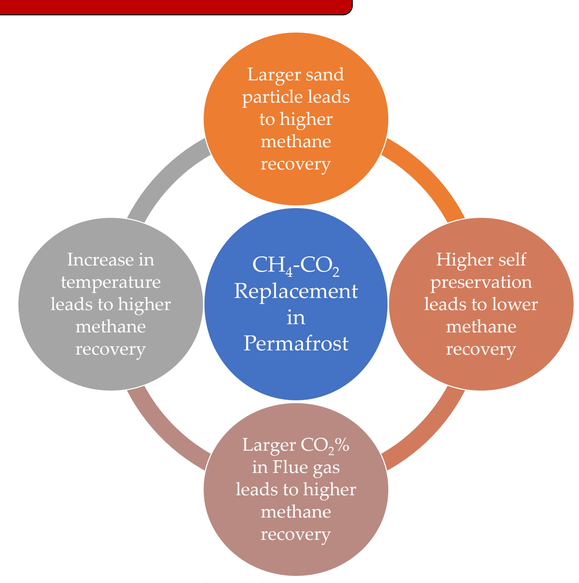

6-References

- Mu, L.; von Solms, N., Methane Production and Carbon Capture by Hydrate Swapping. Energy Fuels 2017, 31 (4), 3338-3347.
- Kvamme, B. Thermodynamic Limitations of the CO_2/N_2 Mixture Injected into CH_4 Hydrate in the Ignik Sikumi Field Trial. J. Chem. Eng. Data 2016, 61 (3), 1280-1295.

CERE
Center for Energy Resources Engineering