Bidirectional switched mode ac-dc converter and method for operating a bidirectional switched mode ac-dc converter

Andersen, Michael Andreas Esbern

Publication date:
2019

Document Version
Publisher's PDF, also known as Version of record

Citation (APA):
Andersen, M. A. E. (2019). Bidirectional switched mode ac-dc converter and method for operating a bidirectional switched mode ac-dc converter. (Patent No. *WO2019211284*).

(12) INTERNATIONAL APPLICATION PUBLISHED UNDER THE PATENT COOPERATION TREATY (PCT)

(19) World Intellectual Property Organization
International Bureau

(43) International Publication Date
07 November 2019 (07.11.2019)

WIPO | PCT

(10) International Publication Number
WO 2019/211284 A1

(51) International Patent Classification:
H02M 1/42 (2007.01) *H02M 3/155* (2006.01)
H02M 5/293 (2006.01) *H02M 7/23* (2006.01)
H02M 5/297 (2006.01) *H02M3/00* (2006.01)

(21) International Application Number:
PCT/EP2019/061072

(22) International Filing Date:
30 April 2019 (30.04.2019)

(25) Filing Language: English

(26) Publication Language: English

(30) Priority Data:
18170228.3 01 May 2018 (01.05.2018) EP

(71) Applicant: DANMARKS TEKNISKE UNIVERSITET [DK/DK]; Anker Engelunds Vej 101 A, 2800 Kgs. Lyngby (DK).

(72) Inventor: ANDERSEN, Michael Andreas Esbern; Gurrehavevej 55, 3200 Helsinge (DK).

(74) Agent: H0IBERGP/S; Adelgade 12, 1304 CopenhagenK (DK).

(81) Designated States *(unless otherwise indicated, for every kind of national protection available)*: AE, AG, AL, AM, AO, AT, AU, AZ, BA, BB, BG, BH, BN, BR, BW, BY, BZ, CA, CH, CL, CN, CO, CR, CU, CZ, DE, DJ, DK, DM, DO, DZ, EC, EE, EG, ES, FI, GB, GD, GE, GH, GM, GT, HN, HR, HU, ID, IL, IN, IR, IS, JO, JP, KE, KG, KH, KN, KP, KR, KW, KZ, LA, LC, LK, LR, LS, LU, LY, MA, MD, ME, MG, MK, MN, MW, MX, MY, MZ, NA, NG, NI, NO, NZ, OM, PA, PE, PG, PH, PL, PT, QA, RO, RS, RU, RW, SA, SC, SD, SE, SG, SK, SL, SM, ST, SV, SY, TH, TJ, TM, TN, TR, TT, TZ, UA, UG, US, UZ, VC, VN, ZA, ZM, ZW.

(84) Designated States *(unless otherwise indicated, for every kind of regional protection available)*: ARIPO (BW, GH, GM, KE, LR, LS, MW, MZ, NA, RW, SD, SL, ST, SZ, TZ, UG, ZM, ZW), Eurasian (AM, AZ, BY, KG, KZ, RU, TJ, TM), European (AL, AT, BE, BG, CH, CY, CZ, DE, DK, EE, ES, FI, FR, GB, GR, HR, HU, IE, IS, IT, LT, LU, LV, MC, MK, MT, NL, NO, PL, PT, RO, RS, SE, SI, SK, SM, TR), OAPI (BF, BJ, CF, CG, Cl, CM, GA, GN, GQ, GW, KM, ML, MR, NE, SN, TD, TG).

Declarations under Rule 4.17:
— *of inventorship (Rule 4.17(iv))*

(54) Title: BIDIRECTIONAL SWITCHED MODE AC-DC CONVERTER AND METHOD FOR OPERATING A BIDIRECTIONAL SWITCHED MODE AC-DC CONVERTER

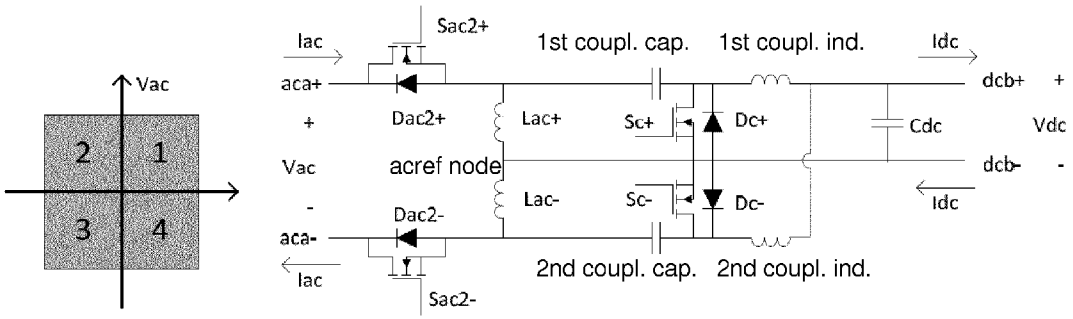

FIG. 4

(57) **Abstract:** The present disclosure relates to a switched mode bidirectional AC-DC converter comprising: an AC side circuit comprising at least two AC power switch pairs comprising a diode and an active switch arranged in parallel; a DC side circuit; a first coupling circuit between the AC side circuit and the DC side circuit; a second coupling circuit between the AC side circuit and the DC side circuit, wherein said first and second coupling circuits comprise at least one further power switch pair comprising a diode and an active switch arranged in parallel; and a control circuit configured to operate the switched mode bidirectional AC-DC converter in four different operation modes corresponding to combinations of polarity of the AC voltage Vac and the AC current Iac by enabling only one of the first and second coupling circuits in each operation mode, the control circuit further configured to operate the switched mode bidirectional AC-DC converter in a normal mode and a power factor correction mode. The present disclosure further relates to a method for operating a switched mode bidirectional AC-DC converter in four operation modes.

WO 2019/211284 A1

[Continued on next page]

Published:
— *with international search report (Art. 21(3))*

Bidirectional switched mode AC-DC converter and method for operating a bidirectional switched mode AC-DC converter

The present disclosure relates to an improved switched mode bidirectional AC-DC converter comprising an AC side circuit, a DC side circuit and two coupling circuits arranged between the AC side circuit and DC side circuit. The disclosure further relates to a method for operating a switched mode bidirectional AC-DC converter.

Background of invention

Switched mode circuits are widely used in a range of applications, notably for power supply purposes. Like other power supplies, a switched mode power supply transfers power from a DC (direct current) or AC (alternating current) source (often mains power) to a DC load. Generally, voltages within a bidirectional switched mode power supply system are generated by performing a DC-DC, DC-AC, or AC-DC conversion by operating a switch coupled to ideally lossless storage elements, such as inductors and capacitors. These systems can generally be considered to represent an efficient way of doing power conversions since the conversion is performed by controlled charging and discharging of relatively low-loss components.

It is, in general, desirable to address the efficiency of switched mode circuits, such as switched mode power supply circuits. High efficiency has always been a goal of power electronics, and efficiency goals for AC-DC converters continue to rise. Typical causes of power loss in a switched mode power supplies include switching losses, resistive losses in passive components and losses in the magnetic components.

Power factor of an AC electrical power system refers to the ratio of the real power flowing to the load to the apparent power in the circuit. More specifically, in AC-DC switched mode converters, a non-sinusoidal waveform is drawn, resulting in a phase angle between input current and voltage, as well as distortion. When the current waveform does not follow the voltage waveform, it results in power losses. Active power factor correction (PFC) is the use of power electronics to change the waveform of current drawn by a load to improve the power factor. Some types of the active power factor correctors are buck, boost, and buck-boost. Active power factor correction can be single-stage or multi-stage.

A conventional PFC rectifier, as shown in fig. 1, consists of a bridge rectifier on the AC side in which two of the diodes that conduct current cause a voltage drop and power loss which in turn drops the efficiency. It would be beneficial to improve the efficiency and the functionality of the conventional AC-DC switched mode converter.

Summary of invention

The present disclosure relates to a switched mode bidirectional AC-DC converter comprising:

- an AC side circuit having a first AC connection (aca+) and a second AC connection (aca-) defining an AC side port, wherein the first and second AC connection define an AC voltage V_{ac} and an AC current I_{ac} for the converter; a third AC connection (acb+) and a fourth AC connection (acb-) defining an internal AC coupling interface; and at least two AC power switch pairs comprising a diode and an active switch arranged in parallel, the at least two AC power switch pairs arranged between the AC side port and the internal AC coupling interface;
- a DC side circuit having a first DC connection (dcb+) and a second DC connection (deb-) defining a DC side port; a parallel DC side output capacitor (CDC) ; and a third DC connection (dca+) and a fourth DC connection (dca-) defining an internal DC coupling interface;
- a first coupling circuit between the AC side circuit and the DC side circuit, connected to the third AC connection (acb+) and the third DC connection (dca+);
- a second coupling circuit between the AC side circuit and the DC side circuit, connected to the fourth AC connection (acb-) and the third DC connection (dca+);

wherein said first and second coupling circuits comprise at least one further power switch pair comprising a diode and an active switch arranged in parallel, and a control circuit configured to operate the switched mode bidirectional AC-DC converter in four different operation modes corresponding to combinations of polarity of the AC voltage V_{ac} and the AC current I_{ac} by enabling only one of the first and second coupling circuits in each operation mode, the control circuit further configured to operate the switched mode bidirectional AC-DC converter in a normal mode and a power factor correction mode. In the power factor correction mode, which may be enabled when power flows from the AC side port to the DC side port, the control circuit may be configured to shape the AC input current I_{ac} according to the AC input voltage V_{ac}.

Thus, the bidirectional AC-DC converter may operate as a PFC rectifier when power flows from the AC side to the DC side, and may operate as an inverter when power flows from the DC side to the AC side. The control circuit may be configured to determine the power flow and which of the four quadrants of voltage and current characteristics that the switched mode bidirectional AC-DC converter shall operate in and control the coupling circuits and other components accordingly.

Fig. 1 shows a conventional PFC rectifier. As can be seen there are always two of the diodes in Dree that conducts current and causes voltage drop and power loss - thus an efficiency drop. The rectifier is capable of operating in only two quadrants, in which the current I_{ac} and voltages V_{ac} are of the same polarity. The presently disclosed bidirectional AC-DC converter with power factor correction is capable of operating in all four quadrants of voltage and current characteristics and is able to do so without the additional voltage drop due to the diodes Dree, which increases efficiency of the converter. With the addition of separate positive and negative coupling circuits between the AC side circuit and the DC side circuit, it is thus possible to have a four quadrant operation with minimum potential drop. The provision of the two coupling circuits, plus and minus, operating alternatingly in accordance with the polarity of the AC input voltage to transfer energy to, or from, the DC side circuit allows true four quadrant power transfer. Fig. 2 shows a block diagram of the presently disclosed switched mode bidirectional AC-DC converter.

The presently disclosed bidirectional AC-DC converter may provide galvanic isolation between the AC side circuit and DC side circuit. Moreover, by the implementation using at least two AC power switch pairs comprising a diode and an active switch arranged in parallel and the arrangement of the mutually exclusive coupling circuits, only one switch may be active in performing the control of the switch-mode operation in each operation mode.

The coupling circuits may each comprise a coupling capacitor connected serially between a coupling switch power switch pair and the AC side circuit. In one embodiment the bidirectional AC-DC converter is configured such that the voltage on the coupling capacitor is maintained at a constant level during operation.

The present disclosure further relates to a method for operating a switched mode bidirectional AC-DC converter, the converter comprising an AC side port having a first

AC connection (aca+) and a second AC connection (aca-), the first and second AC connection defining an AC voltage V_{ac} and an AC current I_{ac}; a DC side port having a first DC connection (dcb+) and a second DC connection (deb-); a first and a second coupling circuit (CC+, CC-) arranged between the AC side port and the DC side port; at least two AC power switch pairs comprising a diode (Dac2+, Dac2-) and an active switch (Sac2+, Sac2-) arranged in parallel, the at least two AC power switch pairs arranged between the AC side port and the first and second coupling circuits (CC+, CC-), said method comprising the steps of:

- in a first operation mode, wherein Vac>0 and Iac>0: enabling the first coupling circuit (CC+), disabling the second coupling circuit (CC-) and using a first of the power switch pairs with the first coupling circuit (CC+) as a switched-mode AC-DC converter with a power flow from the AC side port to the DC side port;
- in a second operation mode, wherein Vac>0 and Iac<0: enabling the first coupling circuit (CC+), disabling the second coupling circuit (CC-) and using the first power switch pair with the first coupling circuit (CC+) as a switched-mode DC-AC converter with a power flow from the DC side port to the AC side port;
- in a third operation mode, wherein Vac<0 and Iac<0: disabling the first coupling circuit (CC+), enabling the second coupling circuit (CC-) and using a second of the power switch pairs with the second coupling circuit (CC-) as a switched-mode AC-DC converter with a power flow from the AC side port to the DC side port;
- in a fourth operation mode, wherein Vac<0 and Iac>0: disabling the first coupling circuit (CC+), enabling the second coupling circuit (CC-) and using a second power switch pair with the second coupling circuit (CC-) as a switched-mode DC-AC converter with a power flow from the DC side port to the AC side port.

Preferably, the method further comprises the step of operating the switched mode bidirectional AC-DC converter in a normal mode and in a power factor correction mode.

'Arranged between', whether it refers to AC power switch pairs, coupling circuits or other components, shall be given the meaning that a component/block is arranged somewhere between two nodes or other components, not necessarily alone but optionally also in combination with additional components.

Description of drawings

Fig- 1 shows a prior art converter.

Fig. 2 shows a block diagram of the presently disclosed switched mode bidirectional AC-DC converter.

Fig. 3A-B show the two AC voltage polarity modes of the presently disclosed switched mode bidirectional AC-DC converter.

Fig. 4 shows an embodiment of the presently disclosed switched mode bidirectional AC-DC converter.

Fig. 5A-D show four operation modes of the presently disclosed switched mode bidirectional AC-DC converter.

Fig. 6A-B show two different embodiments of the AC side circuit.

Fig. 7 shows an embodiment of the DC side circuit.

Fig. 8 shows an embodiment of one of the coupling circuits.

Detailed description of the invention

The present disclosure relates to a switched mode bidirectional AC-DC converter comprising: an AC side circuit; a DC side circuit; first and second coupling circuits between the AC side circuit and DC side circuit. More specifically, the switched mode bidirectional AC-DC converter may be a non-resonant switched mode bidirectional AC-DC converter, which may also incorporate power factor correction capabilities.

The AC side circuit comprises a first AC connection (aca+) and a second AC connection (aca-) defining an AC side port, wherein the first and second AC connection define an AC voltage V_{ac} and an AC current I_{ac} for the converter; a third AC connection (acb+) and a fourth AC connection (acb-) defining an internal AC coupling interface. Preferably the AC side circuit comprises at least two AC power switch pairs comprising a diode and an active switch arranged in parallel, wherein the at least two AC power switch pairs are arranged between the AC side port and the internal AC coupling interface. The active switches may be MOSFETs.

The DC side comprises a first DC connection (dcb+) and a second DC connection (deb-) defining a DC side port, and a third DC connection (dca+) and a fourth DC connection (dca-) defining an internal DC coupling interface. Preferably the DC side circuit comprises a parallel DC side output capacitor (CDC).

The first coupling circuit may be connected to the third AC connection (acb+) and the third DC connection (dca+).The second coupling circuit may be connected to the fourth AC connection (acb-) and the third DC connection (dca+). In one embodiment the first and second coupling circuits comprise at least one further power switch pair comprising a diode and an active switch arranged in parallel, as shown in fig. 8, showing an embodiment of a coupling circuits. The first and second coupling circuits operate in mutually exclusive configuration, wherein no current or power flows in the coupling circuit which is not enabled. A control circuit may be operable to control the switched mode bidirectional AC-DC converter to manage the two mutually exclusive configurations based on the AC voltage V_{ac} and an AC current I_{ac}. Preferably, the control circuit is configured to operate the switched mode bidirectional AC-DC converter in four different operation modes corresponding to combinations of polarity of the AC voltage V_{ac} and the AC current I_{ac} by enabling only one of the first and second coupling circuits. Preferably, the control circuit is further configured to operate the switched mode bidirectional AC-DC converter in a normal mode and a power factor correction mode. In the power facto correction mode the control circuit is preferably configured to shape the AC input current I_{ac} according to the AC input voltage V_{ac}. Moreover, the switched mode bidirectional AC-DC converter may be arranged such that galvanic isolation between the AC side circuit and the DC side is obtained.

AC reference

In order for the presently disclosed bidirectional AC-DC converter to function as described in the present disclosure, the arrangement may require an AC reference connection from the AC side circuit to the DC side circuit. The AC reference (acref) from the AC side circuit may be connected to the second DC connection (dca-) of the DC side circuit. The AC reference may be connected to ground as well as connected to a fifth AC connection (acref) of the AC side circuit. The AC reference may provide a reference voltage from a common coupling point node in the AC side circuit defined by a node connected to both the third AC connection (acb+) and a fourth AC connection (acb-) (internal AC coupling interfaces) via inductors (Lac+, Lac-). The AC reference may be connected to the second DC connection (deb-) of the DC side port or the fourth DC connection (dca-, which may in practice be the same node as the second DC connection (deb-)) and may serve as reference for both the path through the first and second coupling circuits in respective configurations. As can be seen in the example of fig. 4, the common coupling point node for the AC reference (acref node in fig. 4) in the AC side circuit may be a node between the first and second AC inductors (Lac+, Lac-).

AC side circuit - functionality, configurations, topology

The AC side circuit may function both as an input and output. In a switched mode DC-DC converter, if diodes are replaced by MOSFETs and MOSFETSs are replaced by diodes, reverse mode of the converter is achieved. Going from DC-DC converter to DC-AC or AC-DC converters/inverters can be achieved by replacing diodes by MOSFET's. In the presently disclosed switched mode bidirectional AC-DC converter, the AC side circuit may comprise a first pair (Sac2+, Dac2+) of AC power switch pairs comprising a first diode (Dac2+) and a first switch (Sac2+) and a second pair (Sac2-, Dac2-) of AC power switch pairs comprising a second diode (Dac2-) and a second switch (Sac2-). This embodiment is shown in fig. 4. The first pair (Sac2+, Dac2+) of AC power switch pairs may further comprise a serially coupled first AC inductor (Lac+). The second pair (Sac2-, Dac2-) of AC power switch pairs may accordingly further comprise a serially coupled second AC inductor (Lac-). The internal AC connections (acb+, acb-) towards the coupling circuits may correspond to nodes connected to the first and second pairs of the at least two AC power switch pairs.

One advantage of the presently disclosed switched mode bidirectional AC-DC converter is that it may be configured such that there is only one operating switching element and only one diode voltage drop at a time, wherein the bidirectional AC-DC converter is operable in four quadrants. In one embodiment the control circuit is therefore further configured to control the switches of the at least two AC power switches such that a first switch of the at least two AC power switch pairs is short circuited and a second switch of the at least two AC power switch pairs performs a switching process in an AC to DC power flow configuration. Similarly, in another mode, the control circuit may be configured to control the switches of the at least two AC power switches such that a first switch of the at least two AC power switch pairs is short circuited and a second switch of the at least two AC power switch pairs is switched off in a DC to AC power flow configuration.

In one embodiment of the presently disclosed switched mode bidirectional AC-DC converter, the first pair (Sac2+, Dac2+) of AC power switch pairs is arranged between the first AC connection (aca+) and the third AC connection (acb+), and the second pair (Sac2-, Dac2-) of AC power switch pairs is arranged between the second AC connection (aca-) and the fourth AC connection (acb-), as shown in fig. 6A. In another embodiment of the AC side circuit, as shown in fig. 6B, the AC side circuit further comprises a third AC power switch pair comprising a third diode (Dr+) and a third

active switch (Sr+), and a fourth AC power switch pair comprising a fourth diode (Dr-) and a fourth active switch (Sr-), wherein the third and fourth AC power switch pairs are connected serially between the first AC connection (aca+) and the second AC connection (aca-). Preferably, the connection between the third diode (Dr+) and the fourth diode (Dr-) (or the connection between the third and fourth AC power switch pairs) is connected to the AC reference (acref).

DC side circuit

The DC side circuit has an outer DC interface comprising a first DC connection (dcb+) and a second DC connection (deb-) defining a DC side port, and an internal DC coupling interface towards the coupling circuits, said interface comprising a third DC connection (dca+) and a fourth DC connection (dca-). The DC side circuit preferably comprises a parallel DC side output capacitor $_{(CDC)}$. In a preferred embodiment, the first DC connection (dcb+) is connected to the third DC connection (dca+), and the second DC connection (deb-) is connected to the fourth DC connection (dca-). The parallel DC side output capacitor $_{(CDC)}$ may thereby be arranged parallel with respect to both the DC side port and internal DC coupling interface.

Coupling circuits implementation details

As stated above the first and second coupling circuits each comprise at least one power switch pair comprising a diode and an active switch arranged in parallel. Preferably these power switch pairs are arranged parallel in relation to the AC side port and the DC side port.

More specifically the first coupling circuit may comprise a first coupling switch power switch pair comprising a first coupling diode (Dc+) and a first coupling active switch (Sc+) arranged in parallel, wherein a primary side of the first coupling switch power switch pair is connected to the third AC connection (acb+) of the AC side circuit and to the third DC connection (dca+) of the DC side circuit. The other end of the first coupling switch power switch pair may be connected to the AC reference (acref) from the AC side. The first coupling circuit may further comprise a first coupling capacitor connected serially between the primary side of the first coupling switch power switch pair and the third AC connection (acb+) of the AC side circuit. The first coupling circuit may further comprise a first coupling inductor connected serially between the primary side of the first coupling switch power switch pair and the third DC connection (dca+) of the DC side circuit. The first coupling circuit may have a first CC connection (cca) and a

second CC connection (ccb), as shown in for example fig. 8. The first coupling may further comprise a reference CC connection (ccref), which may be connected to AC reference (acref) from the AC side circuit.

The second coupling circuit preferably has the same topology as the first coupling circuit. Consequently it may comprise a second coupling switch power switch pair comprising a second coupling diode (Dc-) and a second coupling active switch (Sc-) arranged in parallel, wherein a primary side of the second coupling switch power switch pair is connected to the fourth AC connection (acb-) of the AC side circuit and to the third DC connection (dca+) of the DC side circuit. As for the first coupling circuit, the second coupling circuit may further comprise a second coupling capacitor connected serially between the primary side of the second coupling switch power switch pair and the fourth AC connection (acb-) of the AC side circuit, and a second coupling inductor connected serially between the primary side of the second coupling switch power switch pair and the third DC connection (dca+) of the DC side circuit. The second coupling circuit may have a first CC connection (cca) and a second CC connection (ccb), as shown in for example fig. 8. The second coupling may further comprise a reference CC connection (ccref), which may be connected to AC reference (acref) from the AC side circuit.

Modes of operation

The control circuit of the presently disclosed switched mode bidirectional AC-DC converter is configured to operate the converter in four different operation modes corresponding to combinations of polarity of the AC voltage V_{ac} and the AC current I_{ac} by enabling only one of the first and second coupling circuits.

Quadrant	Vac	Iac	Sr+	Sr-	Sac2+	Sac2-	Sc+	Sc-
1	>0	>0	off	on	sw	on	off (sync.rec.)	off
2	>0	<0	off	on	off (sync.rec)	on	sw	off
3	<0	<0	on	off	on	sw	off	off (sync.rec)
4	<0	>0	on	off	on	off (sync.rec.)	off	sw

Table 1

Table 1 shows an example of the four operation modes for an embodiment of the switched mode bidirectional AC-DC converter. The Sr+ and Sr- columns may be omitted for the AC side embodiment of fig. 6A. “sw” refers to the switch performing the switch mode operation of the circuit. “sync.rec.” refers to that, alternatively, the switch can perform a synchronous rectification operation. Synchronous rectification in this context refers to the use of an actively controlled switch, such as a MOSFET, for obtaining a rectification. In addition to the four quadrant operation, the control circuit may be configured to operate the switched mode bidirectional AC-DC converter in a normal mode and in a power factor correction mode. The power factor correction mode may be enabled when the power flows from the AC side to the DC, i.e. corresponding to quadrants 1 and 3 of table 1.

With reference to an embodiment corresponding to fig. 4, or equivalent, the operation modes can be describes as follows:

1: The control circuit may be configured to, in a first operation mode, wherein V_{ac} >0 and $I_{ac}>0$, enable the second switch (Sac2-) of the second AC power switch pair; control the first switch (Sac2+) of the first AC power switch pair in a switch mode operation; disable the first coupling active switch (Sc+) of the first coupling circuit, alternatively using the first coupling active switch (Sc+) to perform a synchronous rectification operation; disable the second coupling active switch (Sc-) of the second coupling circuit.

2: The control circuit may be configured to, in a second operation mode, wherein V_{ac} >0 and I_{ac}<0, enable the second switch (Sac2-) of the second AC power switch pair; disable the first switch (Sac2+) of the first AC power switch pair, alternatively using the first switch (Sac2+) to perform a synchronous rectification operation; control the first coupling active switch (Sc+) of the first coupling circuit in a switch mode operation; disable the second coupling active switch (Sc-) of the second coupling circuit.

3. The control circuit may be configured to, in a third operation mode, wherein V_{ac} <0 and I_{ac}<0, enable the first switch (Sac2+) of the first AC power switch pair; control the second switch (Sac2-) of the second AC power switch pair in a switch mode operation; disable the first coupling active switch (Sc+) of the first coupling circuit; disable the

second coupling active switch (Sc-) of the second coupling circuit, alternatively using the second coupling active switch (Sc-) to perform a synchronous rectification operation.

4. The control circuit may be configured to, in a fourth operation mode, wherein V_{ac} <0 and I_{ac}>0, enable the first switch (Sac2+) of the first AC power switch pair; disable the second switch (Sac2-) of the second AC power switch pair, alternatively using the second switch (Sac2-) to perform a synchronous rectification operation; disable the first coupling active switch (Sc+) of the first coupling circuit; control the second coupling active switch (Sc-) of the second coupling circuit in a switch mode operation.

As shown in the table, in the embodiment further comprising a third AC power switch pair comprising and a fourth AC power switch pair, the third active switch (Sr+) may be disabled in the first and second operation mode, and enabled in the third and fourth operation mode. Correspondingly, the fourth active switch (Sr-) may be enabled in the first and second operation mode, and disabled in the third and fourth operation mode. As the third and fourth active switches (Sr+, Sr-) then only operate at the AC voltage frequency , which is typically much lower than the switch-mode frequency, losses in the third and fourth active switches (Sr+, Sr-) can be reduced by selecting larger dies with lower RDS_{on}.

‘Power factor’ refers generally to the ratio of the real power flowing to the load to the apparent power in an AC electrical power system. In a switched mode power supply a boost converter may be inserted between the bridge rectifier and the input capacitors in order to maintain a constant DC output while drawing a current that is in phase as the AC voltage. In the presently disclosed switched mode bidirectional AC-DC converter the control circuit may be configured to operate the switched mode bidirectional AC-DC converter in a normal mode and a power factor correction mode. In the power factor correction mode, power factor correction circuitry may be used to shape the AC input current I_{ac} according to the AC input voltage V_{ac}. Preferably, the power factor correction circuitry is configured to maintain the AC input voltage and the AC input current substantially in phase and proportional to each other.

The power factor correction may comprise integrated further support in the form of a voltage divider network for sensing the AC input voltage and/or circuitry for sensing the

AC input current. Moreover, the switched mode bidirectional AC-DC converter may comprise an active inrush current circuit.

Method for operating a switched mode bidirectional AC-DC converter

The present disclosure further relates to a method for operating a switched mode bidirectional AC-DC converter as described above, wherein the converter comprises an AC side port, first and second coupling circuits and a DC side port. The AC side port has a first AC connection (aca+) and a second AC connection (aca-), the first and second AC connection defining an AC voltage V_{ac} and an AC current I_{ac} The DC side port has a first DC connection (dcb+) and a second DC connection (deb-). The first and a second coupling circuit (CC+, CC-) are arranged between the AC side port and the DC side port. Preferably an AC side circuit comprises at least two AC power switch pairs comprising a diode (Dac2+, Dac2-) and an active switch (Sac2+, Sac2-) arranged in parallel, wherein the at least two AC power switch pairs arranged between the AC side port and the first and second coupling circuits (CC+, CC-).

In a first embodiment, the method comprises the steps of:

- in a first operation mode, wherein Vac>0 and Iac>0: enabling the first coupling circuit (CC+), disabling the second coupling circuit (CC-) and using a first of the power switch pairs with the first coupling circuit (CC+) as a switched-mode AC-DC converter with a power flow from the AC side port to the DC side port;
- in a second operation mode, wherein Vac>0 and Iac<0: enabling the first coupling circuit (CC+), disabling the second coupling circuit (CC-) and using the first power switch pair with the first coupling circuit (CC+) as a switched-mode DC-AC converter with a power flow from the DC side port to the AC side port;
- in a third operation mode, wherein Vac<0 and Iac<0: disabling the first coupling circuit (CC+), enabling the second coupling circuit (CC-) and using a second of the power switch pairs with the second coupling circuit (CC-) as a switched-mode AC-DC converter with a power flow from the AC side port to the DC side port;
- in a fourth operation mode, wherein Vac<0 and Iac>0: disabling the first coupling circuit (CC+), enabling the second coupling circuit (CC-) and using a second power switch pair with the second coupling circuit (CC-) as a switched-mode DC-AC converter with a power flow from the DC side port to the AC side port.

The method may be performed on any version of the presently disclosed switched mode bidirectional AC-DC converter, and may comprise the step of providing such a converter.

As described above, the control circuit of the switched mode bidirectional AC-DC converter may be further configured to operate the switched mode bidirectional AC-DC converter in a normal mode and a power factor correction mode. Consequently, the method for operating the switched mode bidirectional AC-DC converter may comprise the step of operating the switched mode bidirectional AC-DC converter in a normal mode and in a power factor correction mode. In the PFC mode, which may be used when power flows from the AC port to the DC port, PFC circuitry may be configured to perform the step of shaping the AC input current I_{ac} according to the AC input voltage V_{ac} in the power factor correction mode in the first and third operation modes.

Detailed description of drawings

The invention will in the following be described in greater detail with reference to a number of the accompanying drawings. The drawings are exemplary and are intended to illustrate some of the features of the presently disclosed switched mode bidirectional AC-DC converter, and are not to be construed as limiting to the presently disclosed invention.

Fig. 1 shows a prior art converter. There are always two diodes in Dree conduction current and causing voltage drop and power loss.

Fig. 2 shows a block diagram of the presently disclosed switched mode bidirectional AC-DC converter comprising an AC side circuit, a DC side circuit, two coupling circuits and a control circuit.

Fig. 3A shows the disclosed switched mode bidirectional AC-DC converter, wherein the first coupling circuit is enabled/active and the second coupling circuit is disabled/inactive. This may be the case in operation modes 1 and 2. Fig. 3B shows the disclosed switched mode bidirectional AC-DC converter, wherein the second coupling circuit is enabled/active and the first coupling circuit is disabled/inactive. This may be the case in operation modes 3 and 4.

Fig. 4 shows an embodiment of the presently disclosed switched mode bidirectional AC-DC converter. The AC side circuit comprises a first pair (Sac2+, Dac2+) of AC power switch pairs and a second pair (Sac2-, Dac2-) of AC power switch pairs. The AC side circuit of this example further comprises a serially coupled first AC inductor (Lac+) and a serially coupled second AC inductor (Lac-). The DC side circuit has an output capacitor (CDC) in parallel with the DC side port. The first coupling circuit (CC+) comprises a first coupling switch power switch pair comprising a first coupling diode (Dc+) and a first coupling active switch (Sc+). The first coupling circuit further comprises a first coupling capacitor and a first coupling inductor arranged serially between a first CC connection (cca) towards the AC side circuit and a second CC connection (ccb) towards the DC side circuit. The second coupling circuit (CC-) comprises a second coupling switch power switch pair comprising a second coupling diode (Dc-) and a second coupling active switch (Sc-). The second coupling circuit further comprises a second coupling capacitor and a second coupling inductor arranged serially between a first CC connection (cca) towards the AC side circuit and a second CC connection (ccb) towards the DC side circuit.

Fig. 5A-D show four operation modes of the switched mode bidirectional AC-DC converter. Fig. 5A shows the operation for Vac>0 and Iac>0. The switch Sac2+ controls the switch-mode operation just like it would in a DC-DC converter with power flow from the AC side to the DC side. As Sac2- is on and Sc- is off the second coupling circuit is inactive. Fig. 5B shows the operation for Vac>0 and Iac<0. The switch Sc+ controls the switch-mode operation just like it would in a DC-DC converter with power flow from the DC side to the AC side. As Sac2- is on and Sc- is off the second coupling circuit is inactive. Fig. 5C shows the operation for Vac<0 and Iac<0. The switch Sac2- controls the switch-mode operation just like it would in a DC-DC converter with power flow from the AC side to the DC side. As Sac2+ is on and Sc+ is off the first coupling circuit is inactive. Fig. 5D shows the operation for Vac<0 and Iac>0. The switch Sc- controls the switch-mode operation just like it would in a DC-DC converter with power flow from the DC side to the AC side. As Sac2+ is on and Sc+ is off the first coupling circuit is inactive.

Fig. 6A-B show two different embodiments of the AC side circuit. In fig. 6B there are additional third and fourth AC power switch pairs compared to fig. 6A.

Further details of the invention

1. A switched mode bidirectional AC-DC converter comprising:

- an AC side circuit having a first AC connection (aca+) and a second AC connection (aca-) defining an AC side port, wherein the first and second AC connection define an AC voltage V_{ac} and an AC current I_{ac} for the converter; a third AC connection (acb+) and a fourth AC connection (acb-) defining an internal AC coupling interface; and at least two AC power switch pairs comprising a diode and an active switch arranged in parallel, the at least two AC power switch pairs arranged between the AC side port and the internal AC coupling interface;
- a DC side circuit having a first DC connection (dcb+) and a second DC connection (deb-) defining a DC side port; a parallel DC side output capacitor (CDC) ; and a third DC connection (dca+) and a fourth DC connection (dca-) defining an internal DC coupling interface;
- a first coupling circuit between the AC side circuit and the DC side circuit, connected to the third AC connection (acb+) and the third DC connection (dca+);
- a second coupling circuit between the AC side circuit and the DC side circuit, connected to the fourth AC connection (acb-) and the third DC connection (dca+);

  wherein said first and second coupling circuits comprise at least one further power switch pair comprising a diode and an active switch arranged in parallel,
- a control circuit configured to operate the switched mode bidirectional AC-DC converter in four different operation modes corresponding to combinations of polarity of the AC voltage V_{ac} and the AC current I_{ac} by enabling only one of the first and second coupling circuits in each operation mode, the control circuit further configured to operate the switched mode bidirectional AC-DC converter in a normal mode and a power factor correction mode.

2. The switched mode bidirectional AC-DC converter according to any of the preceding items, wherein the AC side circuit comprises a first pair (Sac2+, Dac2+) of AC power switch pairs comprising a first diode (Dac2+) and a first switch (Sac2+) and a second pair (Sac2-, Dac2-) of AC power switch pairs comprising a second diode (Dac2-) and a second switch (Sac2-).

3. The switched mode bidirectional AC-DC converter according to item 2, wherein the first pair (Sac2+, Dac2+) of AC power switch pairs further comprises a serially coupled first AC inductor (Lac+) and the second pair (Sac2-, Dac2-) of AC power switch pairs further comprises a serially coupled second AC inductor (Lac-).

4. The switched mode bidirectional AC-DC converter according to item 3, wherein the third AC connection (acb+) correspond to a node between the first AC inductor (Lac+) and the first pair, and wherein the fourth AC connection (acb-) correspond to a node between the second AC inductor (Lac-) and the second pair.

5. The switched mode bidirectional AC-DC converter according to any of the preceding items, further comprising an AC reference (acref) from the AC side circuit connected to the fourth DC connection (deb-) of the DC side circuit.

6. The switched mode bidirectional AC-DC converter according to item 5, wherein the AC side circuit comprises a fifth AC connection (acref).

7. The switched mode bidirectional AC-DC converter according to any of items 5-6, wherein the AC reference represents a reference voltage from a common coupling point node in the AC side circuit defined by a connection between nodes of the first and second AC inductors (Lac+, Lac-) beyond said AC inductors (Lac+, Lac-) in relation to the two AC power switch pairs.

8. The switched mode bidirectional AC-DC converter according to any of the preceding items, wherein the control circuit is further configured to control the switches of the at least two AC power switches such that a first switch of the at least two AC power switch pairs is short circuited and a second switch of the at least two AC power switch pairs performs a switching process in an AC to DC power flow configuration.

9. The switched mode bidirectional AC-DC converter according to any of the preceding items, wherein the control circuit is further configured to control the switches of the at least two AC power switches such that a first switch of the at least two AC power switch pairs is short circuited and a second switch of the at

least two AC power switch pairs is switched off in a DC to AC power flow configuration.

10. The switched mode bidirectional AC-DC converter according to any of the preceding items, wherein only one of the two AC power switch pairs is short circuited in each operation mode.

11. The switched mode bidirectional AC-DC converter according to any of the preceding items, wherein the first pair (Sac2+, Dac2+) of AC power switch pairs is arranged between the first AC connection (aca+) and the third AC connection (acb+), and wherein the second pair (Sac2-, Dac2-) of AC power switch pairs is arranged between the second AC connection (aca-) and the fourth AC connection (acb-).

12. The switched mode bidirectional AC-DC converter according to any of the preceding items, wherein the AC side circuit further comprises a third AC power switch pair comprising a third diode (Dr+) and a third active switch (Sr+), and a fourth AC power switch pair comprising a fourth diode (Dr-) and a fourth active switch (Sr-), wherein the third and fourth AC power switch pairs are connected serially between the first AC connection (aca+) and the second AC connection (aca-).

13. The switched mode bidirectional AC-DC converter according to item 11-12, wherein a connection between the third diode (Dr+) and the fourth diode (Dr-) is further connected to the AC reference (acref).

14. The switched mode bidirectional AC-DC converter according to item 12, wherein a connection between the third AC power switch pair (Dr+, Sr+) and the fourth AC power switch pair (Dr-, Sr-) is further connected to the AC reference (acref).

15. The switched mode bidirectional AC-DC converter according to any of the preceding items, wherein the first DC connection (dcb+) is connected to the third DC connection (dca+), and wherein the second DC connection (deb-) is connected to the fourth DC connection (dca-), and wherein the parallel DC side

output capacitor (CDC) is arranged parallel with respect to both the DC side port and internal DC coupling interface.

16. The switched mode bidirectional AC-DC converter according to any of the preceding items, wherein the first coupling circuit comprises a first coupling switch power switch pair comprising a first coupling diode (Dc+) and a first coupling active switch (Sc+) arranged in parallel, wherein a primary side of the first coupling switch power switch pair is connected, optionally via a serially connected first coupling capacitor, to the third AC connection (acb+) of the AC side circuit and, optionally via a serially connected first coupling inductor, to the third DC connection (dca+) of the DC side circuit.

17. The switched mode bidirectional AC-DC converter according to item 16, wherein the first coupling circuit further comprising a first coupling capacitor connected serially between the primary side of the first coupling switch power switch pair and the third AC connection (acb+) of the AC side circuit, and a first coupling inductor connected serially between the primary side of the first coupling switch power switch pair and the third DC connection (dca+) of the DC side circuit.

18. The switched mode bidirectional AC-DC converter according to any of the preceding items, wherein the first coupling circuit has a first CC connection (cca) and a second CC connection (ccb).

19. The switched mode bidirectional AC-DC converter according to any of the preceding items, wherein the first coupling circuit has a reference CC connection (ccref).

20. The switched mode bidirectional AC-DC converter according to any of the preceding items, wherein the second coupling circuit comprises a second coupling switch power switch pair comprising a second coupling diode (Dc-) and a second coupling active switch (Sc-) arranged in parallel, wherein a primary side of the second coupling switch power switch pair is connected, optionally via a serially connected second coupling capacitor, to the fourth AC connection (acb-) of the AC side circuit and, optionally via a serially connected

second coupling inductor, to the third DC connection (dca+) of the DC side circuit.

21. The switched mode bidirectional AC-DC converter according to item 20, wherein the second coupling circuit further comprising a second coupling capacitor connected serially between the primary side of the second coupling switch power switch pair and the fourth AC connection (acb-) of the AC side circuit, and a second coupling inductor connected serially between the primary side of the second coupling switch power switch pair and the third DC connection (dca+) of the DC side circuit.

22. The switched mode bidirectional AC-DC converter according to any of the preceding items, wherein the second coupling circuit has a first CC connection (cca) and a second CC connection (ccb).

23. The switched mode bidirectional AC-DC converter according to any of the preceding items, wherein the second coupling circuit has a reference CC connection (ccref).

24. The switched mode bidirectional AC-DC converter according to any of the preceding items, wherein the control circuit is configured to, in a first operation mode, wherein V_{ac} >0 and I_{ac}>0, enable the second switch (Sac2-) of the second AC power switch pair; control the first switch (Sac2+) of the first AC power switch pair in a switch mode operation; disable the first coupling active switch (Sc+) of the first coupling circuit; disable the second coupling active switch (Sc-) of the second coupling circuit.

25. The switched mode bidirectional AC-DC converter according to any of the preceding items, wherein the control circuit is configured to, in a second operation mode, wherein V_{ac} >0 and I_{ac}<0, enable the second switch (Sac2-) of the second AC power switch pair; disable the first switch (Sac2+) of the first AC power switch pair; control the first coupling active switch (Sc+) of the first coupling circuit in a switch mode operation; disable the second coupling active switch (Sc-) of the second coupling circuit.

26. The switched mode bidirectional AC-DC converter according to any of the preceding items, wherein the control circuit is configured to, in a third operation mode, wherein V_{ac} <0 and I_{ac}<0, enable the first switch (Sac2+) of the first AC power switch pair; control the second switch (Sac2-) of the second AC power switch pair in a switch mode operation; disable the first coupling active switch (Sc+) of the first coupling circuit; disable the second coupling active switch (Sc-) of the second coupling circuit.

27. The switched mode bidirectional AC-DC converter according to any of the preceding items, wherein the control circuit is configured to, in a fourth operation mode, wherein V_{ac} <0 and I_{ac}>0, enable the first switch (Sac2+) of the first AC power switch pair; disable the second switch (Sac2-) of the second AC power switch pair; disable the first coupling active switch (Sc+) of the first coupling circuit; control the second coupling active switch (Sc-) of the second coupling circuit in a switch mode operation.

28. The switched mode bidirectional AC-DC converter according to item 12 and items 24-27, wherein the third active switch (Sr+) is disabled in the first and second operation mode, and wherein the third active switch (Sr+) is enabled in the third and fourth operation mode.

29. The switched mode bidirectional AC-DC converter according to item 12 and items 24-27, or item 28, wherein the fourth active switch (Sr-) is enabled in the first and second operation mode, and wherein the fourth active switch (Sr-) is disabled in the third and fourth operation mode.

30. The switched mode bidirectional AC-DC converter according to any of the preceding items, wherein the first and second coupling circuits operate in mutually exclusive configuration, wherein no current or power flows in the coupling circuit which is not enabled.

31. The switched mode bidirectional AC-DC converter according to any of the preceding items, wherein the control circuit comprises power factor correction circuitry configured to shape the AC input current I_{ac} according to the AC input voltage V_{ac} in the power factor correction mode.

32. The switched mode bidirectional AC-DC converter according to item 31, wherein the power factor correction circuitry comprises a voltage divider network for sensing the AC input voltage and/or circuitry for sensing the AC input current.

33. The switched mode bidirectional AC-DC converter according to any of items 31-32, wherein the power factor correction circuitry is configured to maintain the AC input voltage and the AC input current substantially in phase.

34. The switched mode bidirectional AC-DC converter according to any of the preceding items, wherein the AC side circuit and DC side circuit are galvanic isolated.

35. A method for operating a switched mode bidirectional AC-DC converter, the converter comprising an AC side port having a first AC connection (aca+) and a second AC connection (aca-), the first and second AC connection defining an AC voltage V_{ac} and an AC current I_{ac}; a DC side port having a first DC connection (dcb+) and a second DC connection (deb-); a first and a second coupling circuit (CC+, CC-) arranged between the AC side port and the DC side port; at least two AC power switch pairs comprising a diode (Dac2+, Dac2-) and an active switch (Sac2+, Sac2-) arranged in parallel, the at least two AC power switch pairs arranged between the AC side port and the first and second coupling circuits (CC+, CC-), said method comprising the steps of:

- in a first operation mode, wherein Vac>0 and Iac>0: enabling the first coupling circuit (CC+), disabling the second coupling circuit (CC-) and using a first of the AC power switch pairs with the first coupling circuit (CC+) as a switched-mode AC-DC converter with a power flow from the AC side port to the DC side port;
- in a second operation mode, wherein Vac>0 and Iac<0: enabling the first coupling circuit (CC+), disabling the second coupling circuit (CC-) and using the first coupling switch pair with the first coupling circuit (CC+) as a switched-mode DC-AC converter with a power flow from the DC side port to the AC side port;
- in a third operation mode, wherein Vac<0 and Iac<0: disabling the first coupling circuit (CC+), enabling the second coupling circuit (CC-) and using a second of the ACpower switch pairs with the second coupling circuit (CC-) as a switched-

mode AC-DC converter with a power flow from the AC side port to the DC side port;

- in a fourth operation mode, wherein Vac<0 and Iac>0: disabling the first coupling circuit (CC+), enabling the second coupling circuit (CC-) and using a second coupling switch pair with the second coupling circuit (CC-) as a switched-mode DC-AC converter with a power flow from the DC side port to the AC side port.

36. The method for operating a switched mode bidirectional AC-DC converter according to item 36, further comprising the step of operating the switched mode bidirectional AC-DC converter in a normal mode and in a power factor correction mode.

37. The method for operating a switched mode bidirectional AC-DC converter according to any of items 35-36, comprising the step of shaping the AC input current I_{ac} according to the AC input voltage V_{ac} in the power factor correction mode in the first and third operation modes.

38. The method for operating a switched mode bidirectional AC-DC converter according to any of items 35-37, wherein the switched mode bidirectional AC-DC converter is a switched mode bidirectional AC-DC converter according to any of items 1-34.

Claims

1. A switched mode bidirectional AC-DC converter comprising:

- an AC side circuit having a first AC connection (aca+) and a second AC connection (aca-) defining an AC side port, wherein the first and second AC connection define an AC voltage V_{ac} and an AC current I_{ac} for the converter; a third AC connection (acb+) and a fourth AC connection (acb-) defining an internal AC coupling interface; and at least two AC power switch pairs comprising a diode and an active switch arranged in parallel, the at least two AC power switch pairs arranged between the AC side port and the internal AC coupling interface;
- a DC side circuit having a first DC connection (dcb+) and a second DC connection (deb-) defining a DC side port; a parallel DC side output capacitor (CDC) ; and a third DC connection (dca+) and a fourth DC connection (dca-) defining an internal DC coupling interface;
- a first coupling circuit between the AC side circuit and the DC side circuit, connected to the third AC connection (acb+) and the third DC connection (dca+);
- a second coupling circuit between the AC side circuit and the DC side circuit, connected to the fourth AC connection (acb-) and the third DC connection (dca+);

  wherein said first and second coupling circuits comprise at least one further power switch pair comprising a diode and an active switch arranged in parallel,
- a control circuit configured to operate the switched mode bidirectional AC-DC converter in four different operation modes corresponding to combinations of polarity of the AC voltage V_{ac} and the AC current I_{ac} by enabling only one of the first and second coupling circuits in each operation mode, the control circuit further configured to operate the switched mode bidirectional AC-DC converter in a normal mode and a power factor correction mode.

2. The switched mode bidirectional AC-DC converter according to any of the preceding claims, wherein the AC side circuit comprises a first pair (Sac2+, Dac2+) of AC power switch pairs comprising a first diode (Dac2+) and a first switch (Sac2+) and a second pair (Sac2-, Dac2-) of AC power switch pairs comprising a second diode (Dac2-) and a second switch (Sac2-).

3. The switched mode bidirectional AC-DC converter according to any of the preceding claims, further comprising an AC reference (acref) from the AC side circuit connected to the fourth DC connection (deb-) of the DC side circuit.

4. The switched mode bidirectional AC-DC converter according to any of the preceding claims, wherein the control circuit is further configured to control the switches of the at least two AC power switches such that a first switch of the at least two AC power switch pairs is short circuited and a second switch of the at least two AC power switch pairs performs a switching process in an AC to DC power flow configuration.

5. The switched mode bidirectional AC-DC converter according to any of the preceding claims, wherein the control circuit is further configured to control the switches of the at least two AC power switches such that a first switch of the at least two AC power switch pairs is short circuited and a second switch of the at least two AC power switch pairs is switched off in a DC to AC power flow configuration.

6. The switched mode bidirectional AC-DC converter according to any of the preceding claims, wherein the first coupling circuit comprises a first coupling switch power switch pair comprising a first coupling diode (Dc+) and a first coupling active switch (Sc+) arranged in parallel, wherein a primary side of the first coupling switch power switch pair is connected, optionally via a serially connected first coupling capacitor, to the third AC connection (acb+) of the AC side circuit and, optionally via a serially connected first coupling inductor, to the third DC connection (dca+) of the DC side circuit, and or
wherein the second coupling circuit comprises a second coupling switch power switch pair comprising a second coupling diode (Dc-) and a second coupling active switch (Sc-) arranged in parallel, wherein a primary side of the second coupling switch power switch pair is connected, optionally via a serially connected second coupling capacitor, to the fourth AC connection (acb-) of the AC side circuit and, optionally via a serially connected second coupling inductor, to the third DC connection (dca+) of the DC side circuit.

7. The switched mode bidirectional AC-DC converter according to any of the preceding claims, wherein the control circuit is configured to, in a first operation

mode, wherein V_{ac} >0 and I_{ac}>0, enable the second switch (Sac2-) of the second AC power switch pair; control the first switch (Sac2+) of the first AC power switch pair in a switch mode operation; disable the first coupling active switch (Sc+) of the first coupling circuit; disable the second coupling active switch (Sc-) of the second coupling circuit.

8. The switched mode bidirectional AC-DC converter according to any of the preceding claims, wherein the control circuit is configured to, in a second operation mode, wherein V_{ac} >0 and I_{ac}<0, enable the second switch (Sac2-) of the second AC power switch pair; disable the first switch (Sac2+) of the first AC power switch pair; control the first coupling active switch (Sc+) of the first coupling circuit in a switch mode operation; disable the second coupling active switch (Sc-) of the second coupling circuit.

9. The switched mode bidirectional AC-DC converter according to any of the preceding claims, wherein the control circuit is configured to, in a third operation mode, wherein V_{ac} <0 and I_{ac}<0, enable the first switch (Sac2+) of the first AC power switch pair; control the second switch (Sac2-) of the second AC power switch pair in a switch mode operation; disable the first coupling active switch (Sc+) of the first coupling circuit; disable the second coupling active switch (Sc-) of the second coupling circuit.

10. The switched mode bidirectional AC-DC converter according to any of the preceding claims, wherein the control circuit is configured to, in a fourth operation mode, wherein V_{ac} <0 and I_{ac}>0, enable the first switch (Sac2+) of the first AC power switch pair; disable the second switch (Sac2-) of the second AC power switch pair; disable the first coupling active switch (Sc+) of the first coupling circuit; control the second coupling active switch (Sc-) of the second coupling circuit in a switch mode operation.

11. The switched mode bidirectional AC-DC converter according to any of the preceding claims, wherein the AC side circuit further comprises a third AC power switch pair comprising a third diode (Dr+) and a third active switch (Sr+), and a fourth AC power switch pair comprising a fourth diode (Dr-) and a fourth active switch (Sr-), wherein the third and fourth AC power switch pairs are

connected serially between the first AC connection (aca+) and the second AC connection (aca-).

12. The switched mode bidirectional AC-DC converter according to claim 11, wherein the third active switch (Sr+) is disabled in the first and second operation mode, and wherein the third active switch (Sr+) is enabled in the third and fourth operation mode, and wherein the fourth active switch (Sr-) is enabled in the first and second operation mode, and wherein the fourth active switch (Sr-) is disabled in the third and fourth operation mode.

13. The switched mode bidirectional AC-DC converter according to any of claims 11-12, wherein a connection between the third diode (Dr+) and the fourth diode (Dr-) is further connected to the AC reference (acref).

14. The switched mode bidirectional AC-DC converter according to claims 11-12, wherein a connection between the third AC power switch pair (Dr+, Sr+) and the fourth AC power switch pair (Dr-, Sr-) is further connected to the AC reference (acref)

15. The switched mode bidirectional AC-DC converter according to any of the preceding claims, wherein the first and second coupling circuits operate in mutually exclusive configuration, wherein no current or power flows in the coupling circuit which is not enabled.

16. The switched mode bidirectional AC-DC converter according to any of the preceding claims, wherein the control circuit comprises power factor correction circuitry configured to shape the AC input current I_{ac} according to the AC input voltage V_{ac} in the power factor correction mode.

17. A method for operating a switched mode bidirectional AC-DC converter, the converter comprising an AC side port having a first AC connection (aca+) and a second AC connection (aca-), the first and second AC connection defining an AC voltage V_{ac} and an AC current I_{ac}; a DC side port having a first DC connection (dcb+) and a second DC connection (deb-); a first and a second coupling circuit (CC+, CC-) arranged between the AC side port and the DC side port; at least two AC power switch pairs comprising a diode (Dac2+, Dac2-) and

an active switch (Sac2+, Sac2-) arranged in parallel, the at least two AC power switch pairs arranged between the AC side port and the first and second coupling circuits (CC+, CC-), said method comprising the steps of:

- in a first operation mode, wherein Vac>0 and Iac>0: enabling the first coupling circuit (CC+), disabling the second coupling circuit (CC-) and using a first of the AC power switch pairs with the first coupling circuit (CC+) as a switched-mode AC-DC converter with a power flow from the AC side port to the DC side port;
- in a second operation mode, wherein Vac>0 and Iac<0: enabling the first coupling circuit (CC+), disabling the second coupling circuit (CC-) and using the first coupling switch pair with the first coupling circuit (CC+) as a switched-mode DC-AC converter with a power flow from the DC side port to the AC side port;
- in a third operation mode, wherein Vac<0 and Iac<0: disabling the first coupling circuit (CC+), enabling the second coupling circuit (CC-) and using a second of the ACpower switch pairs with the second coupling circuit (CC-) as a switched-mode AC-DC converter with a power flow from the AC side port to the DC side port;
- in a fourth operation mode, wherein Vac<0 and Iac>0: disabling the first coupling circuit (CC+), enabling the second coupling circuit (CC-) and using a second coupling switch pair with the second coupling circuit (CC-) as a switched-mode DC-AC converter with a power flow from the DC side port to the AC side port.

The method for operating a switched mode bidirectional AC-DC converter according to claim 17, further comprising the step of operating the switched mode bidirectional AC-DC converter in a normal mode and in a power factor correction mode.

PRIOR ART

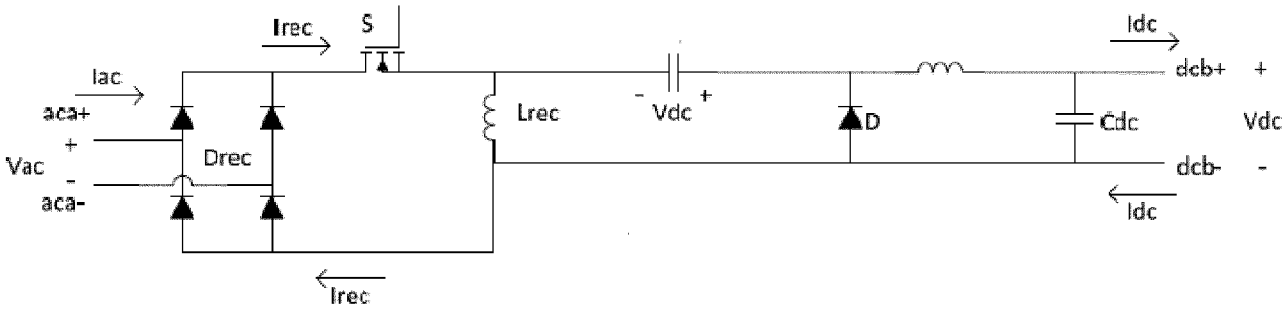

FIG. 1

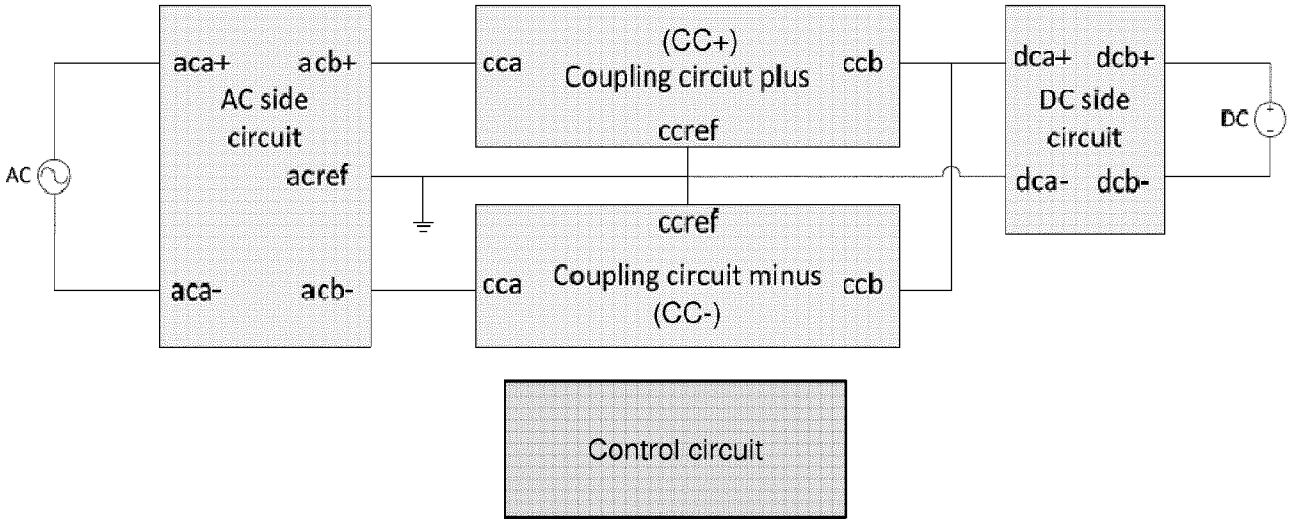

FIG. 2

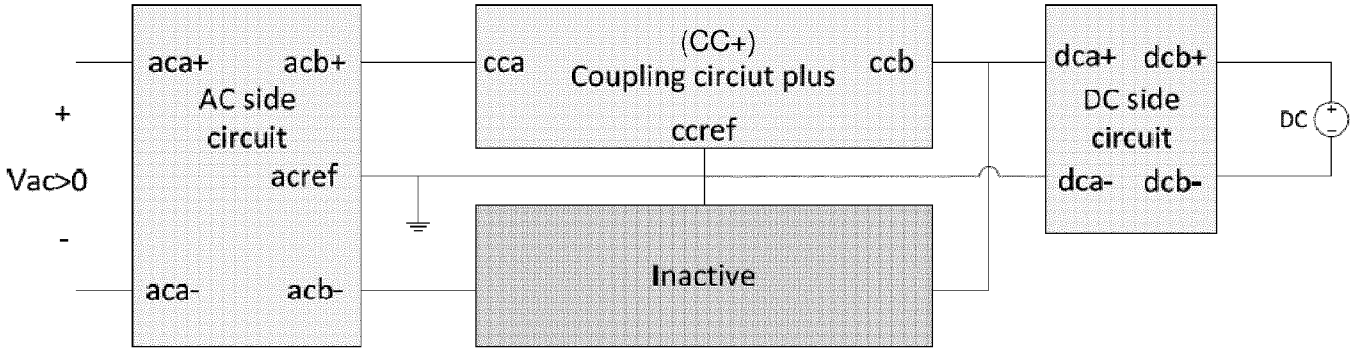
aca+
acb+
AC side
circuit
acref
aca-
acb-
+
Vac>0
-
cca
(CC+)
Coupling circiut plus
ccb
ccref
Inactive
dca+
dcb+
DC side
circuit
dca-
dcb-
DC

FIG. 3A

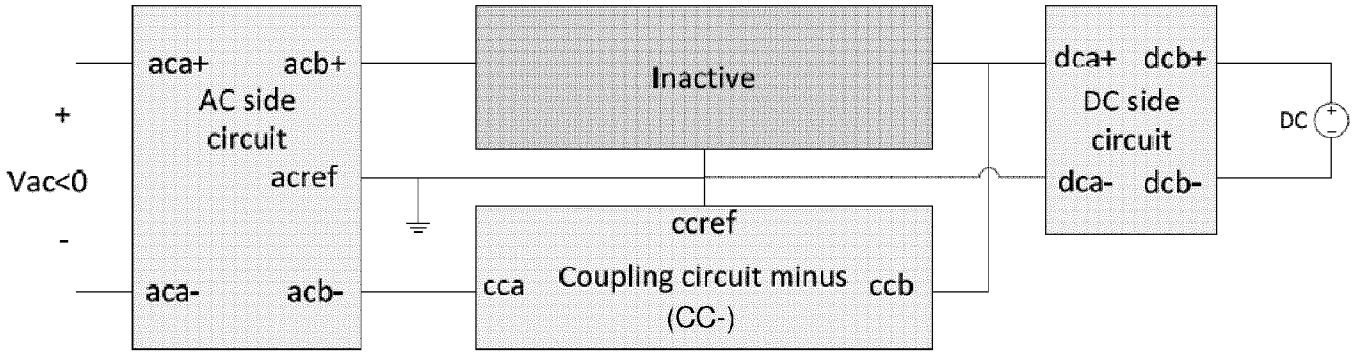
aca+
acb+
AC side
circuit
acref
aca-
acb-
+
Vac<0
-
Inactive
ccref
cca
Coupling circuit minus
(CC-)
ccb
dca+
dcb+
DC side
circuit
dca-
dcb-
DC

FIG. 3B

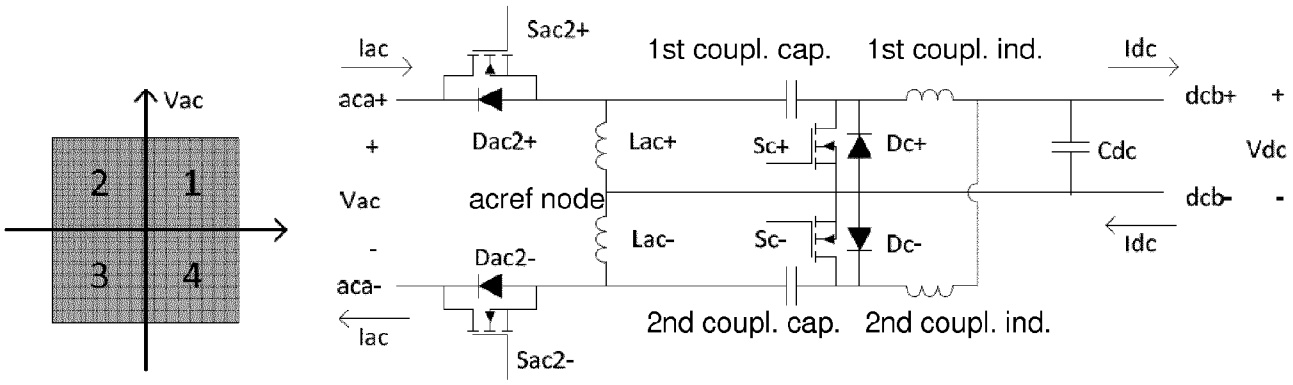

FIG. 4

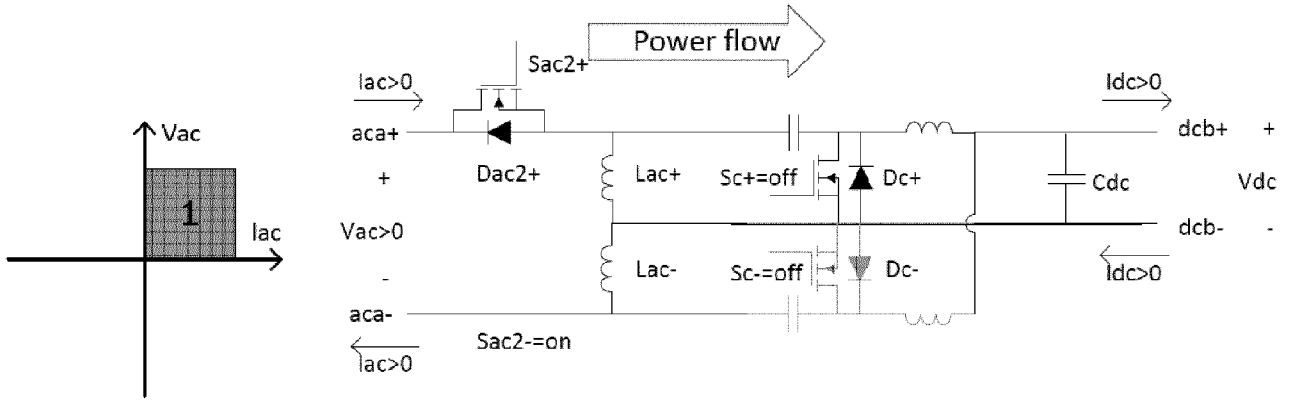

FIG. 5A

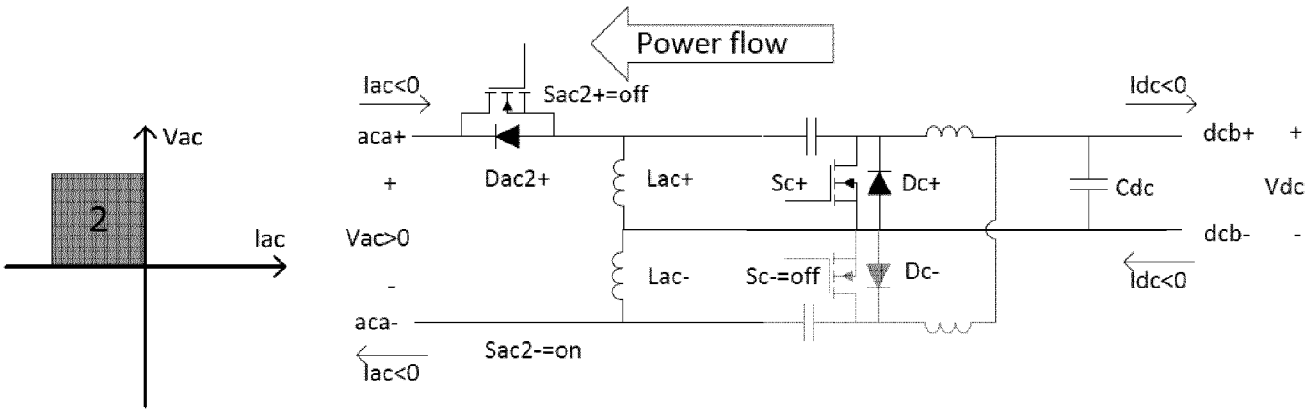

FIG. 5B

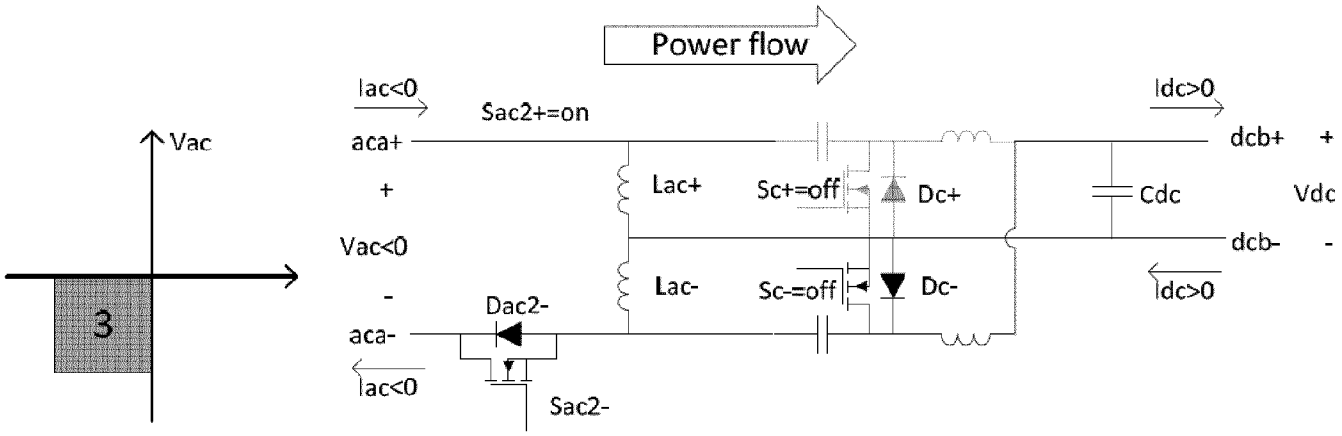
Power flow
Iac<0
Sac2+=on
Idc>0
Vac
aca+
dcb+
+
Lac+
Sc+=off
Dc+
Cdc
Vdc
Vac<0
dcb-
-
Lac-
Sc-=off
Dc-
Idc>0
Dac2-
3
aca-
Iac<0
Sac2-

FIG. 5C

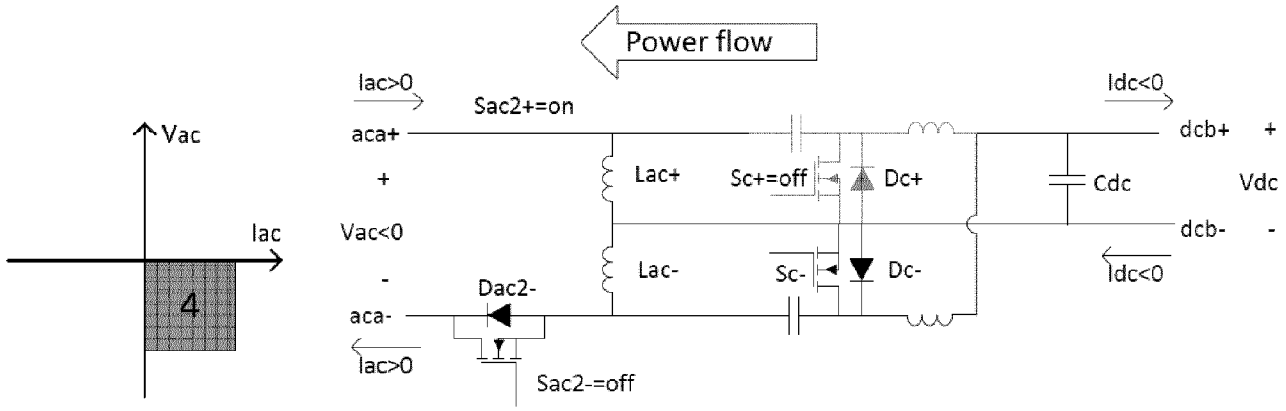
Power flow
Iac>0
Sac2+=on
Idc<0
Vac
aca+
dcb+
+
Lac+
Sc+=off
Dc+
Cdc
Vdc
Iac
Vac<0
dcb-
-
Lac-
Sc-
Dc-
Idc<0
Dac2-
4
aca-
Iac>0
Sac2-=off

FIG. 5D

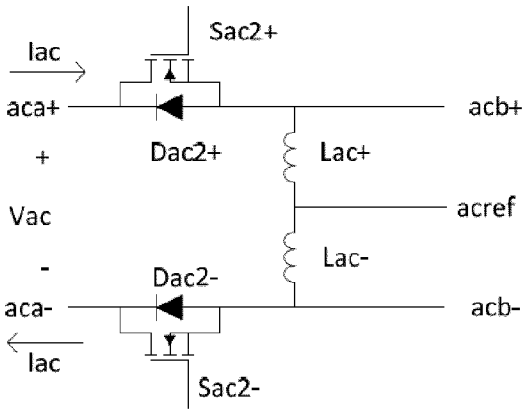

FIG. 6A

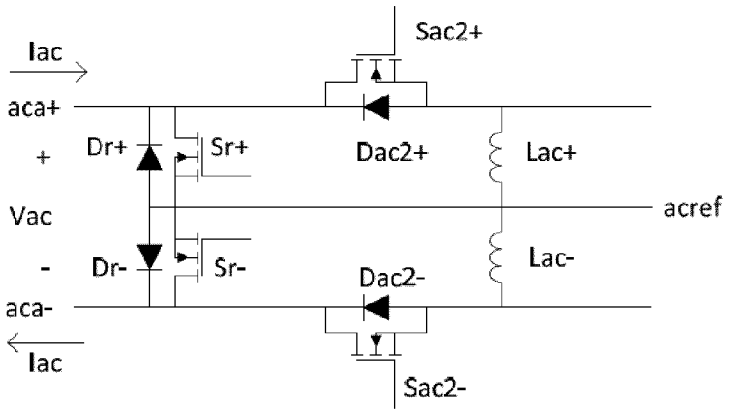

FIG. 6B

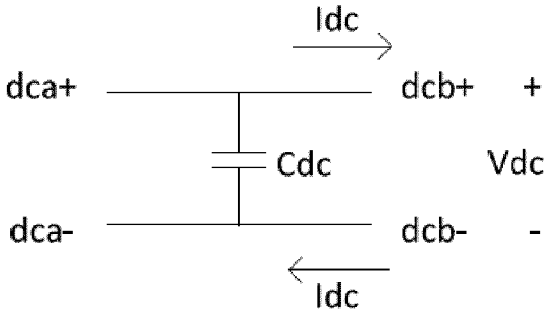

FIG. 7

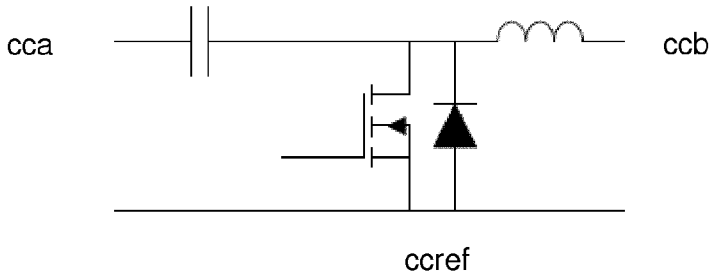

FIG. 8

INTERNATIONAL SEARCH REPORT

International application No
PCT/ EP20 19/06 1072

A. CLASSIFICATION OF SUBJECT MATTER
INV. H02M 1/42
ADD. H02M5/293 H02M5/297 H02M3/ 155 H02M7/23 H02M3/00

According to International Patent Classification (IPC) or to both national classification and IPC

B. FIELDS SEARCHED

Minimum documentation searched (classification system followed by classification symbols)
H02M

Documentation searched other than minimum documentation to the extent that such documents are included in the fields searched

Electronic data base consulted during the international search (name of data base and, where practicable, search terms used)

EPO-Internal, WPI Data

C. DOCUMENTS CONSIDERED TO BE RELEVANT

Category*	Citation of document, with indication, where appropriate, of the relevant passages	Relevant to claim No.
X	US 6 282 109 B1 (FRAIDLIN SIMON [US] ET AL) 28 August 2001 (2001-08-28) abstract figure 4 column 8, line 16 - line 67 column 9, line 1 - line 8 -----	1-18
X	AL-KAABI AYSHA KEMADISH ET AL: "Bridgeless high voltage battery charger PFC rectifier", RENEWABLE ENERGY, vol. 56, 23 October 2012 (2012-10-23), pages 24-31, XP028596723, ISSN: 0960-1481, DOI: 10.1016/J.RENENE.2012.09.050 abstract page 4; figure 2 Section 2.1 -----	1-18

-/--

X Further documents are listed in the continuation of Box C.

3 See patent family annex.

* Special categories of cited documents :

"A" document defining the general state of the art which is not considered to be of particular relevance

"E" earlier application or patent but published on or after the international filing date

"L" document which may throw doubts on priority claim(s) orwhich is cited to establish the publication date of another citation or other special reason (as specified)

"O" document referring to an oral disclosure, use, exhibition or other means

"P" document published prior to the international filing date but later than the priority date claimed

"T" later document published after the international filing date or priority date and not in conflict with the application but cited to understand the principle or theory underlying the invention

"X" document of particular relevance; the claimed invention cannot be considered novel or cannot be considered to involve an inventive step when the document is taken alone

"Y" document of particular relevance; the claimed invention cannot be considered to involve an inventive step when the document is combined with one or more other such documents, such combination being obvious to a person skilled in the art

"&" document member of the same patent family

Date of the actual completion of the international search	Date of mailing of the international search report
21 June 2019	04/07/2019

Name and mailing address of the ISA/	Authorized officer
European Patent Office, P.B. 5818 Patentlaan 2 NL - 2280 HV Rijswijk Tel. (+31-70) 340-2040, Fax: (+31-70) 340-3016	Adami, Salah-Eddine

1

Form PCT/ISA/210 (second sheet) (April 2005)

INTERNATIONAL SEARCH REPORT

International application No
PCT/ EP20 19/06 1072

C(Continuation). DOCUMENTS CONSIDERED TO BE RELEVANT

Category*	Citation of document, with indication, where appropriate, of the relevant passages	Relevant to claim No.
X	WO 02/089303 A1 (POWERLAB AS [DK]; ANDERSEN TRULS MJELDE [DK]) 7 November 2002 (2002-11-07) abstract figure 13 page 7, line 1 - line 6 page 31, line 6 - line 18; figures 18, 20 -----	1-18

1

INTERNATIONAL SEARCH REPORT

Information on patent family members

International application No
PCT/ EP20 19/06 1072

Patent document cited in search report	Publication date	Patent family member(s)	Publication date
US 6282 109 B1	28-08-200 1	NON E	
WO 02089303 A1	07-11-2002	NON E	