Bidirectional switched mode resonant type ac-dc converter and method for operating a bidirectional switched mode resonant type ac-dc converter

Andersen, Michael Andreas Esbern

Publication date:
2019

Document Version
Publisher's PDF, also known as Version of record

Citation (APA):
Andersen, M. A. E. (2019). Bidirectional switched mode resonant type ac-dc converter and method for operating a bidirectional switched mode resonant type ac-dc converter. (Patent No. *WO2019211290*).

(12) INTERNATIONAL APPLICATION PUBLISHED UNDER THE PATENT COOPERATION TREATY (PCT)

(19) World Intellectual Property Organization
International Bureau

(43) International Publication Date
07 November 2019 (07.11.2019)

WIPO | PCT

(10) International Publication Number
WO 2019/211290 A1

(51) International Patent Classification:
H02M 7/797 (2006.01) *H02M 1/00* (2006.01)
*H02M 7/21 7 {*2006.01) *H02M 7/48* (2007.01)

(21) International Application Number:
PCT/EP20 19/06 1083

(22) International Filing Date:
30 April 2019 (30.04.2019)

(25) Filing Language: English

(26) Publication Language: English

(30) Priority Data:
18170241.6 0 1 May 2018 (01.05.2018) EP

(71) Applicant: DANMARKS TEKNISKE UNIVERSITET [DK/DK]; Anker Engelunds Vej 101 A, 2800 Kgs. Lyngby (DK).

(72) Inventor: ANDERSEN, Michael Andreas Esbem; Gurrehavevej 55, 3200 Helsinge (DK).

(74) Agent: H0IBERGP/S; Adelgade 12, 1304 CopenhagenK (DK).

(81) Designated States *(unless otherwise indicated, for every kind of national protection available)*: AE, AG, AL, AM, AO, AT, AU, AZ, BA, BB, BG, BH, BN, BR, BW, BY, BZ, CA, CH, CL, CN, CO, CR, CU, CZ, DE, DJ, DK, DM, DO, DZ, EC, EE, EG, ES, FI, GB, GD, GE, GH, GM, GT, HN, HR, HU, ID, IL, IN, IR, IS, JO, JP, KE, KG, KH, KN, KP, KR, KW, KZ, LA, LC, LK, LR, LS, LU, LY, MA, MD, ME, MG, MK, MN, MW, MX, MY, MZ, NA, NG, NI, NO, NZ, OM, PA, PE, PG, PH, PL, PT, QA, RO, RS, RU, RW, SA, SC, SD, SE, SG, SK, SL, SM, ST, SV, SY, TH, TJ, TM, TN, TR, TT, TZ, UA, UG, US, UZ, VC, VN, ZA, ZM, ZW.

(54) Title: BIDIRECTIONAL SWITCHED MODE RESONANT TYPE AC-DC CONVERTER AND METHOD FOR OPERATING A BIDIRECTIONAL SWITCHED MODE RESONANT TYPE AC-DC CONVERTER

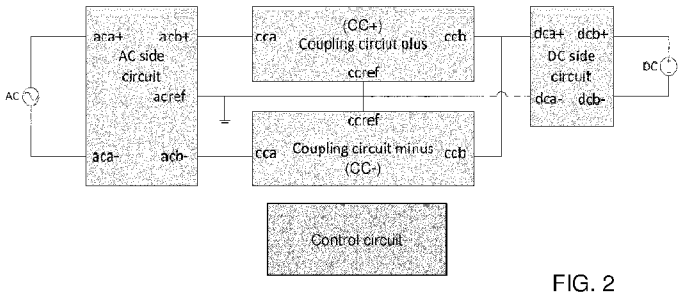

FIG. 2

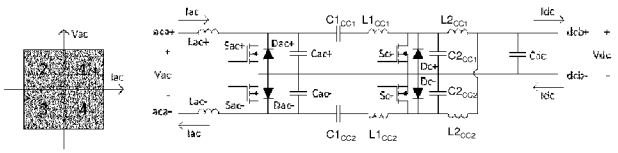

FIG. 4

(57) Abstract: The present disclosure relates to switched mode bidirectional resonant type AC-DC converter comprising: an AC side circuit having a first AC connection (aca+) and a second AC connection (aca-) defining an AC side port, wherein the first and second AC connection define an AC voltage V_{a_c} and an AC current I_{a_c} for the converter; a third AC connection (acb+) and a fourth AC connection (acb-) defining an internal AC coupling interface; and at least two AC power switch pairs comprising a diode and an active switch arranged in parallel, the at least two AC power switch pairs arranged between the AC side port and the internal AC coupling interface; a DC side circuit having a first DC connection (dcb+) and a second DC connection (deb-) defining a DC side port; a

WO 2019/211290 A1

[Continued on next page]

(84) Designated States *(unless otherwise indicated, for every kind of regional protection available)*: ARIPO (BW, GH, GM, KE, LR, LS, MW, *ML*, NA, RW, SD, SL, ST, SZ, TZ, UG, ZM, ZW), Eurasian (AM, AZ, BY, KG, KZ, RU, TJ, TM), European (AL, AT, BE, BG, CH, CY, CZ, DE, DK, EE, ES, FI, FR, GB, GR, HR, HU, IE, IS, IT, LT, LU, LV, MC, MK, MT, NL, NO, PL, PT, RO, RS, SE, SI, SK, SM, TR), OAPI (BF, BJ, CF, CG, Cl, CM, GA, GN, GQ, GW, KM, ML, MR, NE, SN, TD, TG).

Declarations under Rule 4.17:

— *of inventorship (Rule 4.17(iv))*

Published:

— *with international search report (Art. 21(3))*

parallel DC side output capacitor (CDC); and a third DC connection (dca+) and a fourth DC connection (dca-) defining an internal DC coupling interface; a first coupling circuit between the AC side circuit and the DC side circuit, connected to the third AC connection (acb+) and the third DC connection (dca+); a second coupling circuit between the AC side circuit and the DC side circuit, connected to the fourth AC connection (acb-) and the third DC connection (dca+); wherein said first and second coupling circuits comprise: at least one further coupling circuit power switch pair comprising a diode and an active switch arranged in parallel, and resonant components configured to reduce switching losses in the AC power switch pairs and/or the at least one further coupling circuit power switch pair, a control circuit configured to operate the switched mode bidirectional resonant type AC-DC converter in four different operation modes corresponding to combinations of polarity of the AC voltage V_{ac} and the AC current l_{a_c} by enabling only one of the first and second coupling circuits in each operation mode. The present disclosure further elates to a method for operating a switched mode bidirectional resonant type AC-DC converter.

Bidirectional switched mode resonant type AC-DC converter and method for operating a bidirectional switched mode resonant type AC-DC converter

The present disclosure relates to an improved switched mode bidirectional resonant type AC-DC converter comprising an AC side circuit, a DC side circuit and two coupling circuits arranged between the AC side circuit and DC side circuit. The disclosure further relates to a method for operating a switched mode bidirectional resonant type AC-DC converter.

Background of invention

Switched mode circuits are widely used in a range of applications, notably for power supply purposes. Like other power supplies, a switched mode power supply transfers power from a DC (direct current) or AC (alternating current) source (often mains power) to a DC load. Generally, voltages within a bidirectional switched mode power supply system are generated by performing a DC-DC, DC-AC, or AC-DC conversion by operating a switch coupled to ideally lossless storage elements, such as inductors and capacitors. These systems can generally be considered to represent an efficient way of doing power conversions since the conversion is performed by controlled charging and discharging of relatively low-loss components.

It is, in general, desirable to address the efficiency of switched mode circuits, such as switched mode power supply circuits. High efficiency has always been a goal of power electronics, and efficiency goals for AC-DC converters continue to rise. Typical causes of power loss in a switched mode power supplies include switching losses, resistive losses in passive components and losses in the magnetic components.

Summary of invention

The present disclosure relates to a switched mode bidirectional resonant type AC-DC converter comprising:

- an AC side circuit having a first AC connection (aca+) and a second AC connection (aca-) defining an AC side port, wherein the first and second AC connection define an AC voltage V_{ac} and an AC current I_{ac} for the converter; a third AC connection (acb+) and a fourth AC connection (acb-) defining an internal AC coupling interface; and at least two AC power switch pairs comprising a diode and an active switch

arranged in parallel, the at least two AC power switch pairs arranged between the AC side port and the internal AC coupling interface;

- a DC side circuit having a first DC connection (dcb+) and a second DC connection (deb-) defining a DC side port; a parallel DC side output capacitor (CDC) ; and a third DC connection (dca+) and a fourth DC connection (dca-) defining an internal DC coupling interface;
- a first coupling circuit between the AC side circuit and the DC side circuit, connected to the third AC connection (acb+) and the third DC connection (dca+);
- a second coupling circuit between the AC side circuit and the DC side circuit, connected to the fourth AC connection (acb-) and the third DC connection (dca+); wherein said first and second coupling circuits comprise:
    - at least one further coupling circuit power switch pair comprising a diode and an active switch arranged in parallel, and
    - resonant components configured to reduce switching losses in the AC power switch pairs and/or the at least one further coupling circuit power switch pair,
- a control circuit configured to operate the switched mode bidirectional resonant type AC-DC converter in four different operation modes corresponding to combinations of polarity of the AC voltage V_{ac} and the AC current I_{ac} by enabling only one of the first and second coupling circuits in each operation mode.

Fig. 2 (in the form of a block diagram) and fig. 4 show examples of the presently disclosed switched mode bidirectional resonant type AC-DC converter.

In conventional rectifiers there are two diodes in a rectifier stage Dree that conducts current and causes voltage drop and power loss as shown in fig. 1 - thus an efficiency drop. The rectifier is capable of operating in only two quadrants, in which the current and voltages are the same. The presently disclosed switched mode bidirectional resonant type AC-DC converter is capable of operating in all four quadrants of voltage and current characteristics and is able to do so without the additional voltage drop due to the diodes, which increases efficiency of the converter. With the addition of separate positive and negative coupling circuits between the AC side circuit and the DC side circuit, it is thus possible to have a four quadrant operation with minimum potential drop. The provision of the two coupling circuits, plus and minus, operating alternatingly in accordance with the polarity of the AC input voltage to transfer energy to, or from, the DC side circuit allows true four quadrant power transfer. Fig. 2 shows a block

diagram of the presently disclosed switched mode bidirectional resonant type AC-DC converter.

According to the first embodiment of the presently disclosed switched mode bidirectional resonant type AC-DC converter, the first and second coupling circuits comprise resonant components. It may be desirable to switch the transistors in the switching circuit when the voltage difference across the source and drain is at a minimum. Zero-voltage switching may be desirable to minimize energy loss in the transistors. ZVS can be used to improve the efficiency of the power converter and reduce stress in the switching transistors. Within the presently disclosed switched mode bidirectional resonant type AC-DC converter, the control circuit may be configured to, in a first operation mode, wherein V_{ac} >0 and I_{ac}>0, enable the first coupling circuit (CC+) and control a resonant operation with resonant components in the first coupling circuit (CC+) (fig. 5A). Similarly, in a second operation mode, wherein Vac>0 and lac<0, the control circuit may be configured to enable the first coupling circuit (CC+) and control the resonant operation with resonant components in the first coupling circuit (CC+) (fig. 5B). The difference between these two modes is the power flow. In the first mode the power flows from the AC side to the DC side, wherein a first switch (Sac+) of the AC power switch pairs in the AC side circuit controls the resonant operation. In the second mode the power flows from the DC side to the AC side, wherein a first coupling active switch (Sc+) of the first coupling circuit (CC+) circuit controls the resonant operation.

Moreover, in a third operation mode, wherein Vac<0 and lac<0, the control circuit may be configured to enable the second coupling circuit (CC-) and control the resonant operation with resonant components in the second coupling circuit (CC-) (fig. 5C). Similarly, in a fourth operation mode, wherein Vac<0 and lac>0, the control circuit may be configured to enable the second coupling circuit (CC-) and control the resonant operation with resonant components in the second coupling circuit (CC-) (fig. 5D). The difference between the third and fourth mode is the power flow. In the third mode the power flows from the AC side to the DC side, wherein a second switch (Sac-) of a second AC power switch pair (Sac-/Dac-) in the AC side circuit controls the resonant operation. In the fourth mode the power flows from the DC side to the AC side, wherein a second coupling active switch (Sc-) of the second coupling circuit (CC-) circuit controls the resonant operation.

By embedding control of the resonant operation in the switched mode bidirectional resonant type AC-DC converter as proposed, while handling two mutually exclusive coupling circuits and using four operation modes for the four quadrants, and by configuring one, preferably a single switch, at a time, to control the resonant operation, a more efficient converter, without the power loss caused by the two diodes that are conventionally used in rectifier of this type (as shown in the prior art rectifier in fig. 1), is obtained. In the present invention only one of the coupling circuits is active.

The present disclosure further relates to a method for operating a switched mode bidirectional resonant type AC-DC converter, the converter comprising an AC side port having a first AC connection (aca+) and a second AC connection (aca-), the first and second AC connection defining an AC voltage V_{ac} and an AC current I_{ac}; a DC side port having a first DC connection (dcb+) and a second DC connection (deb-); a first and a second coupling circuit (CC+, CC-) arranged between the AC side port and the DC side port; at least two AC power switch pairs comprising a diode (Dac+, Dac-) and an active switch (Sac+, Sac-) arranged in parallel, the at least two AC power switch pairs, preferably arranged between the AC side port and the first and second coupling circuits (CC+, CC-). Examples of AC power switch pair arrangements are shown in fig. 6A-C. In a first embodiment, the method comprises the steps of:

- in a first operation mode, wherein Vac>0 and Iac>0: enabling the first coupling circuit (CC+), disabling the second coupling circuit (CC-) and using a first of the power switch pairs with the first coupling circuit (CC+) as a switched-mode AC-DC converter with a power flow from the AC side port to the DC side port, wherein a first switch (Sac+) controls a resonant operation with resonant components in the first coupling circuit (CC+);
- in a second operation mode, wherein Vac>0 and Iac<0: enabling the first coupling circuit (CC+), disabling the second coupling circuit (CC-) and using the first power switch pair with the first coupling circuit (CC+) as a switched-mode DC-AC converter with a power flow from the DC side port to the AC side port, wherein a first coupling active switch (Sc+) of the first coupling circuit (CC+) controls a resonant operation with resonant components in the first coupling circuit (CC+);
- in a third operation mode, wherein Vac<0 and Iac<0: disabling the first coupling circuit (CC+), enabling the second coupling circuit (CC-) and using a second of the power switch pairs with the second coupling circuit (CC-) as a switched-mode AC-DC converter with a power flow from the AC side port to the DC side

port, wherein a second switch (Sac-) controls a resonant operation with resonant components in the second coupling circuit (CC-);

- in a fourth operation mode, wherein Vac<0 and Iac>0: disabling the first coupling circuit (CC+), enabling the second coupling circuit (CC-) and using a second power switch pair with the second coupling circuit (CC-) as a switched-mode DC-AC converter with a power flow from the DC side port to the AC side port, wherein a second coupling active switch (Sc-) of the second coupling circuit (CC-) controls a resonant operation with resonant components in the second coupling circuit (CC-).

'Arranged between', whether it refers to AC power switch pairs, coupling circuits or other components, shall be given the meaning that a component/block is arranged somewhere between two nodes or other components, not necessarily alone but optionally also in combination with additional components.

Description of drawings

Fig. 1 shows the AC rectifier stage of a prior art converter.

Fig. 2 shows a block diagram of the presently disclosed switched mode bidirectional resonant type AC-DC converter.

Fig. 3A-B show two AC voltage polarity configurations of the presently disclosed switched mode bidirectional resonant type AC-DC converter.

Fig. 4 shows an embodiment of the presently disclosed switched mode bidirectional resonant type AC-DC converter.

Fig. 5A-D show four operation modes of the presently disclosed switched mode bidirectional resonant type AC-DC converter.

Fig. 6A-C show three different embodiments of the AC side circuit.

Fig. 7A-C show further embodiments of the AC side circuit with additional switches.

Fig. 7 shows an embodiment of the DC side circuit.

Fig. 8A-Q show embodiments of the coupling circuits.

Detailed description of the invention

The present disclosure relates to a switched mode bidirectional resonant type AC-DC converter comprising: an AC side circuit; a DC side circuit; first and second coupling circuits between the AC side circuit and DC side circuit. The AC side circuit comprises a first AC connection (aca+) and a second AC connection (aca-) defining an AC side

port, wherein the first and second AC connection define an AC voltage V_{ac} and an AC current I_{ac} for the converter; a third AC connection (acb+) and a fourth AC connection (acb-) defining an internal AC coupling interface. Preferably the AC side circuit comprises at least two AC power switch pairs comprising a diode and an active switch arranged in parallel, wherein the at least two AC power switch pairs are arranged between the AC side port and the internal AC coupling interface. The active switches may be MOSFETs. 'Arranged between' means that the AC power switch pairs are arranged somewhere between the AC side port and the internal AC coupling interface, possibly in combination with additional components.

The DC side comprises a first DC connection (dcb+) and a second DC connection (deb-) defining a DC side port, and a third DC connection (dca+) and a fourth DC connection (dca-) defining an internal DC coupling interface. Preferably the DC side circuit comprises a parallel DC side output capacitor (CDC).

The first coupling circuit may be connected to the third AC connection (acb+) and the third DC connection (dca+). The second coupling circuit may be connected to the fourth AC connection (acb-) and the third DC connection (dca+). The first and second coupling circuits comprise at least one coupling circuit diode-switch pair, and preferably also resonant components configured to reduce switching losses in the AC power switch pairs and/or the at least one coupling circuit diode-switch pair. The first and second coupling circuits operate in mutually exclusive configuration, wherein no current or power flows in the coupling circuit which is not enabled. A control circuit may be operable to control the switched mode bidirectional resonant type AC-DC converter to manage the two mutually exclusive configurations based on the AC voltage V_{ac} and an AC current I_{ac}. Preferably, the control circuit is configured to operate the switched mode bidirectional resonant type AC-DC converter in four different operation modes corresponding to combinations of polarity of the AC voltage V_{ac} and the AC current I_{ac} by enabling only one of the first and second coupling circuits.

AC reference

In order for the presently disclosed switched mode bidirectional resonant type AC-DC converter to function as described in the present disclosure, the arrangement may require an AC reference connection from the AC side circuit to the DC side circuit. The AC reference may be connected to ground as well as connected to a fifth AC connection (acref) of the AC side circuit. The AC reference (acref) from the AC side

circuit may be connected to the second DC connection (dca-) of the DC side circuit. The AC reference may provide a reference voltage from a common coupling point node in the AC side circuit defined by a node connected to both the third AC connection (acb+) and a fourth AC connection (acb-) (internal AC coupling interfaces). The AC reference may be a reference voltage from a common coupling point node in the AC side circuit defined by a connection between nodes of the first and second AC inductors (Lac+, Lac-) beyond said AC inductors (Lac+, Lac-) in relation to the two AC power switch pairs, or defined by a connection between the first pair (Sac+, Dac+) of AC power switch pairs and the second pair (Sac-, Dac-) of AC power switch pairs, or defined by a connection between a fifth pair (Sac1+, Dac1 +) of AC power switch pairs and a sixth pair (Sad-, Dac1-).The AC reference may be connected to the second DC connection (deb-) of the DC side port and may serve as reference for both the path through the first and second coupling circuits in respective configurations.

AC side circuit - functionality, configurations, topology

In one embodiment of the presently disclosed switched mode bidirectional resonant type AC-DC converter, the AC side circuit may comprise a first pair (Sac+, Dac+) of AC power switch pairs comprising a first diode (Dac+) and a first switch (Sac+) and a second pair (Sac-, Dac-) of AC power switch pairs comprising a second diode (Dac-) and a second switch (Sac-). This embodiment is shown in fig. 4. The first pair (Sac+, Dac+) of AC power switch pairs may further comprise a serially coupled first AC inductor (Lac+). The second pair (Sac-, Dac-) of AC power switch pairs may accordingly further comprise a serially coupled second AC inductor (Lac-). The internal AC connections (acb+, acb-) towards the coupling circuits may correspond to nodes connected to the first and second pairs of the at least two AC power switch pairs.

One advantage of the presently disclosed switched mode bidirectional resonant type AC-DC converter is that it may be configured such that there is only one operating switching element and only one diode voltage drop at a time, wherein the switched mode bidirectional resonant type AC-DC converter is operable in four quadrants, thus with possible power flow in both directions. In one embodiment the control circuit is therefore further configured to control the switches of the at least two AC power switches such that a first switch of the at least two AC power switch pairs is short circuited and a second switch of the at least two AC power switch pairs performs a switching process, controlling the resonant operation, in an AC to DC power flow. In one embodiment the first coupling switch comprises a first coupling switch power

switch pair comprising a first coupling diode (Dc+) and a first coupling active switch (Sc+), and the second coupling switch comprises a second coupling switch power switch pair comprising a second coupling diode (Dc-) and a coupling active switch (Sc-). When power flows from the DC side to the AC one of these switches is disabled and the other perform a switching process, controlling the resonant operation.

In one embodiment of the presently disclosed switched mode bidirectional resonant type AC-DC converter, the first pair (Sac+, Dac+) of AC power switch pairs is arranged between the first AC connection (aca+) and the third AC connection (acb+), and the second pair (Sac-, Dac-) of AC power switch pairs is arranged between the second AC connection (aca-) and the fourth AC connection (acb-), as shown in fig. 6A. In another embodiment of the AC side circuit, as shown in fig. 6B, the AC side circuit further comprises a third AC power switch pair comprising a third diode (Dac2+) and a third active switch (Sac2+), and a fourth AC power switch pair comprising a fourth diode (Dac2-) and a fourth active switch (Sac2-), the third and fourth AC power switch pairs connected in series with the first and second AC power switch pairs, respectively. Optionally, only the third and fourth AC power switch pairs are present, as shown in fig. 6C.

DC side circuit

The DC side circuit has an outer DC interface comprising a first DC connection (dcb+) and a second DC connection (deb-) defining a DC side port, and an internal DC coupling interface towards the coupling circuits, said interface comprising a third DC connection (dca+) and a fourth DC connection (dca-). The DC side circuit preferably comprises a parallel DC side output capacitor (CDC) . In a preferred embodiment, the first DC connection (dcb+) is connected to the third DC connection (dca+), and the second DC connection (deb-) is connected to the fourth DC connection (dca-). The parallel DC side output capacitor (CDC) may thereby be arranged parallel with respect to both the DC side port and internal DC coupling interface.

Coupling circuits implementation details, resonant components

As stated above the first and second coupling circuits comprise at least one coupling circuit diode-switch pair, and resonant components configured to reduce switching losses in the AC power switch pairs and/or the at least one coupling circuit diode-switch pair.

The resonant components may be implemented in various embodiments and configurations, as shown in the examples of fig. 9A-9Q. Typically the resonant operation is controlled by one of the switches in the AC side circuits in an AC to DC power flow. In a DC to AC power flow the resonant operation may be controlled by a switch in one of the coupling circuits. In one embodiment the resonant components of the first and second coupling circuits each comprise at least a first inductor (L1 $_{C}$**ci/** L1$_{CC2}$) and a first capacitor (C1 cci/ C 1$_{CC2}$) as shown in fig. 4. These resonant components may be arranged in series with the third AC connection (acb+) and fourth AC connection (acb-), respectively, on the AC side, and with a second inductor **(L2$_{C}$ci/** L2$_{CC2}$), on the DC side. The switched mode bidirectional resonant type AC-DC converter may further comprise second capacitors **(C2$_{C}$ci/ C2$_{C}$c$_{2}$)** (in the first and second coupling circuits) arranged in parallel to the third AC connection (acb+) and the AC reference (acref). The second coupling capacitors **(C2cci/C2cc$_{2}$)** may be arranged in parallel with the first and second coupling circuit diodes (Dc+/Dc-). Preferably, the first coupling circuit and the second coupling circuit are identical and/or symmetrical with respect to the AC input voltage V_{ac}. The resonant components of the first and second coupling circuits may each comprise a second inductor **(L2$_{C}$ci/** L2$_{C}$C2) arranged in series with the third DC connection (dca+).

Modes of operation

The control circuit of the presently disclosed switched mode bidirectional resonant type AC-DC converter is configured to operate the converter in four different operation modes corresponding to combinations of polarity of the AC voltage V_{ac} and the AC current I_{ac} by enabling only one of the first and second coupling circuits.

With reference to an embodiment corresponding to fig. 4, or equivalent, the operation modes can be describes as follows:

1: The control circuit may be configured to, in a first operation mode, wherein V_{ac} >0 and I_{ac}>0, enable the second switch Sac-) of the second AC power switch pair; use the first switch (Sac+) of the first AC power switch pair to control the resonant operation; disable the first coupling active switch (Sc+) of the first coupling circuit; disable the second coupling active switch (Sc-) of the second coupling circuit.

2: The control circuit may be configured to, in a second operation mode, wherein V_{ac} >0 and I_{ac}<0, enable the second switch (Sac-) of the second AC power switch pair; disable

the first switch (Sac+) of the first AC power switch pair; use the coupling active switch (Sc+) of the first coupling circuit to control the resonant operation; disable the second coupling active switch (Sc-) of the second coupling circuit.

3. The control circuit may be configured to, in a third operation mode, wherein V_{ac} <0 and I_{ac}<0, enable the first switch (Sac+) of the first AC power switch pair; use the second switch (Sac-) of the second AC power switch pair to control the resonant operation; disable the first coupling active switch (Sc+) of the first coupling circuit; disable the second coupling active switch (Sc-) of the second coupling circuit.

4. The control circuit may be configured to, in a fourth operation mode, wherein V_{ac} <0 and I_{ac}>0, enable the first switch (Sac+) of the first AC power switch pair; disable the second switch (Sac-) of the second AC power switch pair; disable the first coupling active switch (Sc+) of the first coupling circuit; use the second coupling active switch (Sc-) of the second coupling circuit to control the resonant operation.

Method for operating a switched mode bidirectional resonant type AC-DC converter

The present disclosure further relates to a method for operating a switched mode bidirectional resonant type AC-DC converter as described above, wherein the converter comprises an AC side port, first and second coupling circuits and a DC side port. The AC side port has a first AC connection (aca+) and a second AC connection (aca-), the first and second AC connection defining an AC voltage V_{ac} and an AC current I_{ac}. The DC side port has a first DC connection (dcb+) and a second DC connection (deb-). The first and a second coupling circuit (CC+, CC-) are arranged between the AC side port and the DC side port. Preferably an AC side circuit comprises at least two AC power switch pairs comprising a diode (Dac+, Dac-) and an active switch (Sac+, Sac-) arranged in parallel, preferably wherein the at least two AC power switch pairs arranged between the AC side port and the first and second coupling circuits (CC+, CC-).

In a first embodiment, the method comprises the steps of:

- in a first operation mode, wherein Vac>0 and Iac>0: enabling the first coupling circuit (CC+), disabling the second coupling circuit (CC-) and using the power switch pairs with the first coupling circuit (CC+) as a switched-mode AC-DC converter with a power flow from the AC side port to the DC side port, wherein a

first switch (Sac+) controls a resonant operation with resonant components in the first coupling circuit (CC+);

- in a second operation mode, wherein Vac>0 and Iac<0: enabling the first coupling circuit (CC+), disabling the second coupling circuit (CC-) and using the power switch pair with the first coupling circuit (CC+) as a switched-mode DC-AC converter with a power flow from the DC side port to the AC side port, wherein a first coupling active switch (Sc+) of the first coupling circuit (CC+) controls a resonant operation with resonant components in the first coupling circuit (CC+);
- in a third operation mode, wherein Vac<0 and Iac<0: disabling the first coupling circuit (CC+), enabling the second coupling circuit (CC-) and using the power switch pairs with the second coupling circuit (CC-) as a switched-mode AC-DC converter with a power flow from the AC side port to the DC side port, wherein a second switch (Sac-) controls a resonant operation with resonant components in the second coupling circuit (CC-);
- in a fourth operation mode, wherein Vac<0 and Iac>0: disabling the first coupling circuit (CC+), enabling the second coupling circuit (CC-) and using the power switch pair with the second coupling circuit (CC-) as a switched-mode DC-AC converter with a power flow from the DC side port to the AC side port, wherein a second coupling active switch (Sc-) of the second coupling circuit (CC-) controls a resonant operation with resonant components in the second coupling circuit (CC-)

The method may be performed on any version of the presently disclosed switched mode bidirectional resonant type AC-DC converter, and may comprise the step of providing such a converter.

Detailed description of drawings

The invention will in the following be described in greater detail with reference to the accompanying drawings. The drawings are exemplary and are intended to illustrate some of the features of the presently disclosed switched mode bidirectional resonant type AC-DC converter, and are not to be construed as limiting to the presently disclosed invention.

Fig. 1 shows the AC rectifier stage of a prior art converter. As can be seen, there are always two diodes conducting current and causing voltage drop and power loss.

Fig. 2 shows a block diagram of the presently disclosed switched mode bidirectional resonant type AC-DC converter comprising an AC side circuit, a DC side circuit, two coupling circuits and a control circuit.

Fig. 3A shows the disclosed switched mode bidirectional resonant type AC-DC converter, wherein the first coupling circuit is enabled/active and the second coupling circuit is inactive. This may be the case in operation mode 1 and 2. Fig. 3B shows the disclosed switched mode bidirectional resonant type AC-DC converter, wherein the second coupling circuit is enabled/active and the first coupling circuit is inactive. This may be the case in operation mode 3 and 4.

Fig. 4 shows an embodiment of the presently disclosed switched mode bidirectional resonant type AC-DC converter. The AC side circuit comprises a first pair (Sac+, Dac+) of AC power switch pairs and a second pair (Sac-, Dac-) of AC power switch pairs and AC capacitors (Cac+/Cac-) in parallel with the first and second pairs of AC power switch pairs, respectively. The AC side circuit of this example further comprises a serially coupled first AC inductor (Lac+) and a serially coupled second AC inductor (Lac-). The DC side circuit has an output capacitor (CDC) in parallel with the DC side port. The first coupling circuit (CC+) comprises a first coupling circuit diode (Dc+) and a first coupling active switch (Sc+). The second coupling circuit (CC-) comprises a second coupling circuit diode (Dc-) and a second coupling active switch (Sc-). Each coupling circuit comprises a number of resonant components: fist coupling circuit (CC+): C1cci, L1cci, C2cci, L2Cci; second coupling circuit (CC-): C1cc2, L1CC2, C2Cc2, L2CC2-

Fig. 5A-D show four operation modes of the presently disclosed switched mode bidirectional resonant type AC-DC converter. Fig. 5A shows the operation for Vac>0 and Iac>0. The switch Sac+ controls the resonant operation. As Sac-=on and Sc-=off and Sc+=off the second coupling circuit (Coupling circuit minus) is inactive. Fig. 5B shows the operation for Vac>0 and Iac<0. The switch Sc+ controls the resonant operation. As Sac-=on and Sc-=off and Sac+=off the second coupling circuit (Coupling circuit minus) is inactive. Fig. 5C shows the operation for Vac<0 and Iac<0. The switch Sac- controls the resonant operation. As Sac+ =on and Sc+=off and Sc-=off the first coupling circuit (Coupling circuit plus) is inactive. Fig. 5D shows the operation for Vac<0 and Iac>0. The switch Sc- controls the resonant operation. As Sac+ =on and Sc+=off and Sac-=off the first coupling circuit (Coupling circuit plus) is inactive.

Fig. 6A-C show three different embodiments of the AC side circuit. In fig. 6B there are additional third and fourth AC power switch pairs compared to fig. 6A. The third and fourth AC power switch pairs are arranged in series in relation to aca+ and aca-. In fig. 6C only the third and fourth AC power switch pairs are present and not the first and second AC power switch pairs.

Fig. 7A-C show further embodiments of the AC side circuit with additional diode-switch pairs with switches (Sr+, Sr-). The additional switches are only operated at the AC-side frequency, thus reducing switch losses, whereas the other switches preferably operate at a higher and resonant switching frequency.

Examples

The following examples are intended to explain possible operations for different embodiments of the presently disclosed switched mode bidirectional resonant type AC-DC converter. Table 1 represents a possible operation of the switched mode bidirectional resonant type AC-DC converter having an AC side circuit corresponding to that of fig. 6A or fig. 7A. Table 2 represents a possible operation of the switched mode bidirectional resonant type AC-DC converter having an AC side circuit corresponding to that of fig. 6B or fig. 7B. Table 3 represents a possible operation of the switched mode bidirectional resonant type AC-DC converter having an AC side circuit corresponding to that of fig. 6C or fig. 7C.

Quadrant	Vac	Iac	Sr+	Sr-	Sac+	Sac-	Sc+	Sc-
1	>0	>0	off	on	res.sw.	on	off (sync.rec.)	off
2	>0	<0	off	on	off (sync.rec)	on	res.sw.	off
3	<0	<0	on	off	on	res.sw.	off	off (sync.rec)
4	<0	>0	on	off	on	off (sync.rec.)	off	res.sw.

Table 1

Quadrant	Vac	Iac	Sr+	Sr-	Sac1+	Sac1-	Sac2+	Sac2-	Sc+	Sc-
1	>0	>0	off	on	res.sw1	on	res.sw2	on	off (sync. rec.)	off
2	>0	<0	off	on	off (sync. rec)	on	off (sync. rec)	on	res.sw.	off
3	<0	<0	on	off	on	res.sw1.	on	res.sw2.	off	off (sync. rec)
4	<0	>0	on	off	on	off (sync. rec.)	on	off (sync. rec.)	off	res.sw.

Table 2

Quadrant	Vac	Iac	Sr+	Sr-	Sac2+	Sac2-	Sc+	Sc-
1	>0	>0	off	on	res.sw2.	on	off (sync.rec.)	off
2	>0	<0	off	on	off (sync.rec)	on	res.sw.	off
3	<0	<0	on	off	on	res.sw2.	off	off (sync.rec)
4	<0	>0	on	off	on	off (sync.rec.)	off	res.sw.

Table 3

Further details of the invention

1. A switched mode bidirectional resonant type AC-DC converter comprising:
   - an AC side circuit having a first AC connection (aca+) and a second AC connection (aca-) defining an AC side port, wherein the first and second AC connection define an AC voltage V_{ac} and an AC current I_{ac} for the converter; a third AC connection (acb+) and a fourth AC connection (acb-) defining an internal AC coupling interface; and at least two AC power switch pairs comprising a diode and an active switch arranged in parallel, the at least

two AC power switch pairs arranged between the AC side port and the internal AC coupling interface;

- a DC side circuit having a first DC connection (dcb+) and a second DC connection (deb-) defining a DC side port; a parallel DC side output capacitor (CDC) ; and a third DC connection (dca+) and a fourth DC connection (dca-) defining an internal DC coupling interface;
- a first coupling circuit between the AC side circuit and the DC side circuit, connected to the third AC connection (acb+) and the third DC connection (dca+);
- a second coupling circuit between the AC side circuit and the DC side circuit, connected to the fourth AC connection (acb-) and the third DC connection (dca+);

  wherein said first and second coupling circuits comprise:

  - at least one further coupling circuit power switch pair comprising a diode and an active switch arranged in parallel, and
  - resonant components configured to reduce switching losses in the AC power switch pairs and/or the at least one further coupling circuit power switch pair,
- a control circuit configured to operate the switched mode bidirectional resonant type AC-DC converter in four different operation modes corresponding to combinations of polarity of the AC voltage V_{ac} and the AC current I_{ac} by enabling only one of the first and second coupling circuits in each operation mode.

2. The switched mode bidirectional resonant type AC-DC converter according to any of the preceding items, wherein the AC side circuit comprises a first pair (Sac+, Dac+) of AC power switch pairs comprising a first diode (Dac+) and a first switch (Sac+) and a second pair (Sac-, Dac-) of AC power switch pairs comprising a second diode (Dac-) and a second switch (Sac-).

3. The switched mode bidirectional resonant type AC-DC converter according to item 2, wherein the first pair (Sac+, Dac+) of AC power switch pairs further comprises a serially coupled first AC inductor (Lac+) and the second pair (Sac-, Dac-) of AC power switch pairs further comprises a serially coupled second AC inductor (Lac-).

4. The switched mode bidirectional resonant type AC-DC converter according to any of the preceding items, wherein the first coupling circuit comprises a first coupling switch power switch pair comprising a first coupling diode (Dc+) and a first coupling active switch (Sc+).

5. The switched mode bidirectional resonant type AC-DC converter according to any of the preceding items, wherein the second coupling circuit comprises a second coupling switch power switch pair comprising a second coupling diode (Dc-) and a second coupling active switch (Sc-).

6. The switched mode bidirectional resonant type AC-DC converter according to any of the preceding items, further comprising an AC reference (acref) from the AC side circuit connected to the fourth DC connection (dca-) or the second DC connection (deb-) of the DC side circuit.

7. The switched mode bidirectional resonant type AC-DC converter according to item 6, wherein the AC reference represents a reference voltage from a common coupling point node in the AC side circuit defined by a connection between nodes of the first and second AC inductors (Lac+, Lac-) beyond said AC inductors (Lac+, Lac-) in relation to the two AC power switch pairs or defined by a connection between the first pair (Sac+, Dac+) of AC power switch pairs and the second pair (Sac-, Dac-) of AC power switch pairs, or defined by a connection between a fifth pair (Sac1 +, Dac1+) of AC power switch pairs and a sixth pair (Sad-, Dad-) of AC power switch pairs.

8. The switched mode bidirectional resonant type AC-DC converter according to any of the preceding items, wherein the resonant components of the first and second coupling circuits each comprise at least a first inductor ($L1_{cci}$/ $L1_{CC2}$) and a first capacitor ($C1_{cci}$/ $C1_{CC2}$).

9. The switched mode bidirectional resonant type AC-DC converter according to item 8, wherein the first inductor ($L1_{cci}$/ $L1_{CC2}$) and first capacitor ($C1_{cci}$/ $C1_{CC2}$) are arranged in series with the third AC connection (acb+) and fourth AC connection (acb-), respectively.

10. The switched mode bidirectional resonant type AC-DC converter according to item 9, wherein the resonant components of the first and second coupling circuits each comprise a second capacitor ($C2_{C}ci$/ $C2_{C}c_{2}$) arranged in parallel to the third AC connection (acb+) and the AC reference (acref) and the fourth AC connection (acb-) and the AC reference (acref), respectively, optionally wherein the resonant components of the first and second coupling circuits each comprise a second inductor ($L2_{C}ci$/ $L2_{C}C2$) arranged in series with the third DC connection (dca+).

11. The switched mode bidirectional resonant type AC-DC converter according to any of the preceding items, wherein the control circuit is configured to, in a first operation mode, wherein V_{ac} >0 and I_{ac}>0, enable the first coupling circuit (CC+) and control a resonant operation with resonant components in the first coupling circuit (CC+) in an AC to DC power flow configuration.

12. The switched mode bidirectional resonant type AC-DC converter according to items 2 and 11, wherein the first switch (Sac+) controls the resonant operation.

13. The switched mode bidirectional resonant type AC-DC converter according to any of the preceding items, wherein the control circuit is configured to, in a second operation mode, wherein V_{ac} >0 and I_{ac}<0, enable the first coupling circuit (CC+) and control a resonant operation with resonant components in the first coupling circuit (CC+) in a DC to AC power flow configuration.

14. The switched mode bidirectional resonant type AC-DC converter according to items 4 and 13, wherein the first coupling active switch (Sc+) controls the resonant operation.

15. The switched mode bidirectional resonant type AC-DC converter according to any of the preceding items, wherein the control circuit is configured to, in a third operation mode, wherein V_{ac} <0 and I_{ac}<0, enable the second coupling circuit (CC-) and control a resonant operation with resonant components in the second coupling circuit (CC-) in an AC to DC power flow configuration.

16. The switched mode bidirectional resonant type AC-DC converter according to items 2 and 15, wherein the second switch (Sac-) controls the resonant operation.

17. The switched mode bidirectional resonant type AC-DC converter according to any of the preceding items, wherein the control circuit is configured to, in a fourth operation mode, wherein V_{ac} <0 and I_{ac}>0, enable the second coupling circuit (CC-) and control a resonant operation with resonant components in the second coupling circuit (CC-) in a DC to AC power flow configuration.

18. The switched mode bidirectional resonant type AC-DC converter according to items 5 and 17, wherein the second coupling active switch (Sc-) controls the resonant operation.

19. The switched mode bidirectional resonant type AC-DC converter according to any of the preceding items, wherein the first pair (Sac+, Dac+) of AC power switch pairs is arranged between the first AC connection (aca+) and the third AC connection (acb+), and wherein the second pair (Sac-, Dac-) of AC power switch pairs is arranged between the second AC connection (aca-) and the third AC connection (acb-).

20. The switched mode bidirectional resonant type AC-DC converter according to any of items 1-18, wherein the AC side circuit further comprises a third AC power switch pair comprising a third diode (Dac2+) and a third active switch (Sac2+), and a fourth AC power switch pair comprising a fourth diode (Dac2-) and a fourth active switch (Sac-), the third and fourth AC power switch pairs connected in series with the first and second AC power switch pairs, respectively.

21. The switched mode bidirectional resonant type AC-DC converter according to any of items 1-19, wherein the AC side circuit comprises a third AC power switch pair comprising a third diode (Dac2+) and a third active switch (Sac2+), and a fourth AC power switch pair comprising a fourth diode (Dac2-) and a fourth active switch (Sac-), the third and fourth AC power switch pairs connected in series with the first AC connection (aca+) and second AC connection (aca-), respectively.

22. The switched mode bidirectional resonant type AC-DC converter according to any of the preceding items, wherein the first DC connection (dcb+) is connected to the third DC connection (dca+), and wherein the second DC connection (dcb-) is connected to the fourth DC connection (dca-), and wherein the parallel DC side output capacitor (CDC) is arranged parallel with respect to both the DC side port and internal DC coupling interface.

23. The switched mode bidirectional resonant type AC-DC converter according to any of the preceding items, wherein the first coupling circuit comprises at least one coupling circuit diode-switch pair (Dc+/Sc+) and a first coupling capacitor (C1 **cci**) arranged in parallel.

24. The switched mode bidirectional resonant type AC-DC converter according to any of the preceding items, wherein the second coupling circuit comprises at least one coupling circuit diode-switch pair (Dc-/Sc-) and a second coupling capacitor (C1 cc_2) arranged in parallel.

25. The switched mode bidirectional resonant type AC-DC converter according to any of the preceding items, wherein the first coupling circuit and the second coupling circuit are identical.

26. The switched mode bidirectional resonant type AC-DC converter according to any of the preceding items, wherein the AC side circuit and/or the first and second coupling circuits is/are symmetrical with respect to the AC input voltage **Vac**

27. The switched mode bidirectional resonant type AC-DC converter according to any of the preceding items, wherein only one active switch at each point in time performs the resonant operation.

28. The switched mode bidirectional resonant type AC-DC converter according to any of the preceding items, wherein a voltage across the first switch (Sac+) and the first coupling diode (Dc+) has approximately the shape of a single way rectified sinusoid.

29. The switched mode bidirectional resonant type AC-DC converter according to any of the preceding items, wherein a voltage across the second switch (Sac-) and the first coupling diode (Dc-) has approximately the shape of a single way rectified sinusoid.

30. The switched mode bidirectional resonant type AC-DC converter according to any of the preceding items, wherein the first and second coupling circuits operate in mutually exclusive configuration, wherein no current or power flows in the coupling circuit which is not enabled.

31. A method for operating a switched mode bidirectional resonant type AC-DC converter, the converter comprising an AC side port having a first AC connection (aca+) and a second AC connection (aca-), the first and second AC connection defining an AC voltage V_{ac} and an AC current I_{ac}; a DC side port having a first DC connection (dcb+) and a second DC connection (deb-); a first and a second coupling circuit (CC+, CC-) arranged between the AC side port and the DC side port; at least two AC power switch pairs comprising a diode (Dac+, Dac-) and an active switch (Sac+, Sac-) arranged in parallel, the at least two AC power switch pairs preferably arranged between the AC side port and the first and second coupling circuits (CC+, CC-), said method comprising the steps of:

- in a first operation mode, wherein Vac>0 and Iac>0: enabling the first coupling circuit (CC+), disabling the second coupling circuit (CC-) and using a first of the power switch pairs with the first coupling circuit (CC+) as a switched-mode AC-DC converter with a power flow from the AC side port to the DC side port, wherein a first switch (Sac+) controls a resonant operation with resonant components in the first coupling circuit (CC+);
- in a second operation mode, wherein Vac>0 and Iac<0: enabling the first coupling circuit (CC+), disabling the second coupling circuit (CC-) and using the first power switch pair with the first coupling circuit (CC+) as a switched-mode DC-AC converter with a power flow from the DC side port to the AC side port, wherein a first coupling active switch (Sc+) of the first coupling circuit (CC+) controls a resonant operation with resonant components in the first coupling circuit (CC+);
- in a third operation mode, wherein Vac<0 and Iac<0: disabling the first coupling circuit (CC+), enabling the second coupling circuit (CC-) and using a second of

the power switch pairs with the second coupling circuit (CC-) as a switched-mode AC-DC converter with a power flow from the AC side port to the DC side port, wherein a second switch (Sac-) controls a resonant operation with resonant components in the second coupling circuit (CC-);

- in a fourth operation mode, wherein Vac<0 and Iac>0: disabling the first coupling circuit (CC+), enabling the second coupling circuit (CC-) and using a second power switch pair with the second coupling circuit (CC-) as a switched-mode DC-AC converter with a power flow from the DC side port to the AC side port, wherein a second coupling active switch (Sc-) of the second coupling circuit (CC-) controls a resonant operation with resonant components in the second coupling circuit (CC-).

32. The method for operating a switched mode bidirectional resonant type AC-DC converter according to item 31, wherein the switched mode bidirectional resonant type AC-DC converter is a switched mode bidirectional resonant type AC-DC converter according to any of items 1-30.

Claims

1. A switched mode bidirectional resonant type AC-DC converter comprising:
   - an AC side circuit having a first AC connection (aca+) and a second AC connection (aca-) defining an AC side port, wherein the first and second AC connection define an AC voltage V_{ac} and an AC current I_{ac} for the converter; a third AC connection (acb+) and a fourth AC connection (acb-) defining an internal AC coupling interface; and at least two AC power switch pairs comprising a diode and an active switch arranged in parallel, the at least two AC power switch pairs arranged between the AC side port and the internal AC coupling interface;
   - a DC side circuit having a first DC connection (dcb+) and a second DC connection (deb-) defining a DC side port; a parallel DC side output capacitor (CDC) ; and a third DC connection (dca+) and a fourth DC connection (dca-) defining an internal DC coupling interface;
   - a first coupling circuit between the AC side circuit and the DC side circuit, connected to the third AC connection (acb+) and the third DC connection (dca+);
   - a second coupling circuit between the AC side circuit and the DC side circuit, connected to the fourth AC connection (acb-) and the third DC connection (dca+);

     wherein said first and second coupling circuits comprise:
     - o at least one further coupling circuit power switch pair comprising a diode and an active switch arranged in parallel, and
     - o resonant components configured to reduce switching losses in the AC power switch pairs and/or the at least one further coupling circuit power switch pair,
   - a control circuit configured to operate the switched mode bidirectional resonant type AC-DC converter in four different operation modes corresponding to combinations of polarity of the AC voltage V_{ac} and the AC current I_{ac} by enabling only one of the first and second coupling circuits in each operation mode.

2. The switched mode bidirectional resonant type AC-DC converter according to any of the preceding claims, wherein the AC side circuit comprises a first pair (Sac+, Dac+) of AC power switch pairs comprising a first diode (Dac+) and a

first switch (Sac+) and a second pair (Sac-, Dac-) of AC power switch pairs comprising a second diode (Dac-) and a second switch (Sac-).

3. The switched mode bidirectional resonant type AC-DC converter according to any of the preceding claims, wherein the first coupling circuit comprises a first coupling switch power switch pair comprising a first coupling diode (Dc+) and a first coupling active switch (Sc+), and wherein the second coupling circuit comprises a second coupling switch power switch pair comprising a second coupling diode (Dc-) and a second coupling active switch (Sc-).

4. The switched mode bidirectional resonant type AC-DC converter according to any of the preceding claims, further comprising an AC reference (acref) from the AC side circuit connected to the fourth DC connection (dca-) or the second DC connection (deb-) of the DC side circuit.

5. The switched mode bidirectional resonant type AC-DC converter according to any of the preceding claims, wherein the resonant components of the first and second coupling circuits each comprise at least a first inductor ($L1_{C}ci$/ $L1_{CC2}$) and a first capacitor ($C1$ cci/ $C1_{CC2}$), wherein the first inductor ($L1$ cci/ $L1_{CC2}$) and first capacitor ($C1$ cci/ $C1cc_2$) are arranged in series with the third AC connection (acb+) and fourth AC connection (acb-), respectively.

6. The switched mode bidirectional resonant type AC-DC converter according to any of the preceding claims, wherein the control circuit is configured to, in a first operation mode, wherein V_{ac} >0 and I_{ac}>0, enable the first coupling circuit (CC+) and control a resonant operation with resonant components in the first coupling circuit (CC+) in an AC to DC power flow configuration.

7. The switched mode bidirectional resonant type AC-DC converter according to claims 2 and 6, wherein the first switch (Sac+) controls the resonant operation.

8. The switched mode bidirectional resonant type AC-DC converter according to any of the preceding claims, wherein the control circuit is configured to, in a second operation mode, wherein V_{ac} >0 and I_{ac}<0, enable the first coupling circuit (CC+) and control a resonant operation with resonant components in the first coupling circuit (CC+) in a DC to AC power flow configuration.

9. The switched mode bidirectional resonant type AC-DC converter according to claims 3 and 8, wherein the first coupling active switch (Sc+) controls the resonant operation.

10. The switched mode bidirectional resonant type AC-DC converter according to any of the preceding claims, wherein the control circuit is configured to, in a third operation mode, wherein V_{ac} <0 and I_{ac}<0, enable the second coupling circuit (CC-) and control a resonant operation with resonant components in the second coupling circuit (CC-) in an AC to DC power flow configuration.

11. The switched mode bidirectional resonant type AC-DC converter according to claims 2 and 10, wherein the second switch (Sac-) controls the resonant operation.

12. The switched mode bidirectional resonant type AC-DC converter according to any of the preceding claims, wherein the control circuit is configured to, in a fourth operation mode, wherein V_{ac} <0 and I_{ac}>0, enable the second coupling circuit (CC-) and control a resonant operation with resonant components in the second coupling circuit (CC-) in a DC to AC power flow configuration.

13. The switched mode bidirectional resonant type AC-DC converter according to claims 3 and 12, wherein the second coupling active switch (Sc-) controls the resonant operation.

14. The switched mode bidirectional resonant type AC-DC converter according to any of the preceding claims, wherein the first coupling circuit comprises at least one coupling circuit diode-switch pair (Dc+/Sc+) and a first coupling capacitor ($C2_{C}ci$) arranged in parallel, and wherein the second coupling circuit comprises at least one coupling circuit diode-switch pair (Dc-/Sc-) and a second coupling capacitor ($C2_{C}c_{2}$) arranged in parallel.

15. A method for operating a switched mode bidirectional resonant type AC-DC converter, the converter comprising an AC side port having a first AC connection (aca+) and a second AC connection (aca-), the first and second AC connection defining an AC voltage V_{ac} and an AC current I_{ac}; a DC side port having a first DC connection (dcb+) and a second DC connection (deb-); a first

and a second coupling circuit (CC+, CC-) arranged between the AC side port and the DC side port; at least two AC power switch pairs comprising a diode (Dac+, Dac-) and an active switch (Sac+, Sac-) arranged in parallel, the at least two AC power switch pairs preferably arranged between the AC side port and the first and second coupling circuits (CC+, CC-), said method comprising the steps of:

- in a first operation mode, wherein Vac>0 and Iac>0: enabling the first coupling circuit (CC+), disabling the second coupling circuit (CC-) and using a first of the power switch pairs with the first coupling circuit (CC+) as a switched-mode AC-DC converter with a power flow from the AC side port to the DC side port, wherein a first switch (Sac+) controls a resonant operation with resonant components in the first coupling circuit (CC+);
- in a second operation mode, wherein Vac>0 and Iac<0: enabling the first coupling circuit (CC+), disabling the second coupling circuit (CC-) and using the first power switch pair with the first coupling circuit (CC+) as a switched-mode DC-AC converter with a power flow from the DC side port to the AC side port, wherein a first coupling active switch (Sc+) of the first coupling circuit (CC+) controls a resonant operation with resonant components in the first coupling circuit (CC+);
- in a third operation mode, wherein Vac<0 and Iac<0: disabling the first coupling circuit (CC+), enabling the second coupling circuit (CC-) and using a second of the power switch pairs with the second coupling circuit (CC-) as a switched-mode AC-DC converter with a power flow from the AC side port to the DC side port, wherein a second switch (Sac-) controls a resonant operation with resonant components in the second coupling circuit (CC-);
- in a fourth operation mode, wherein Vac<0 and Iac>0: disabling the first coupling circuit (CC+), enabling the second coupling circuit (CC-) and using a second power switch pair with the second coupling circuit (CC-) as a switched-mode DC-AC converter with a power flow from the DC side port to the AC side port, wherein a second coupling active switch (Sc-) of the second coupling circuit (CC-) controls a resonant operation with resonant components in the second coupling circuit (CC-).

PRIOR ART

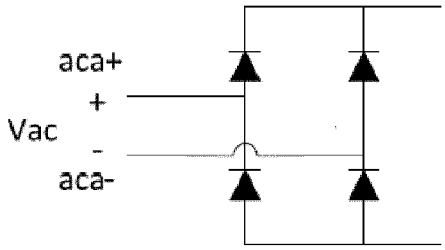

FIG. 1

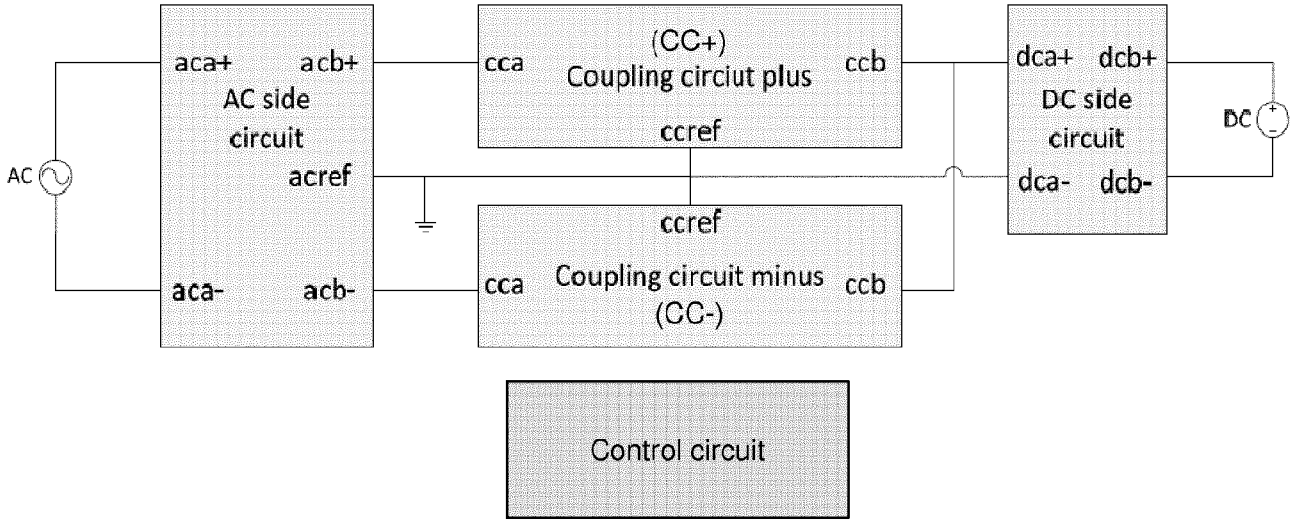

FIG. 2

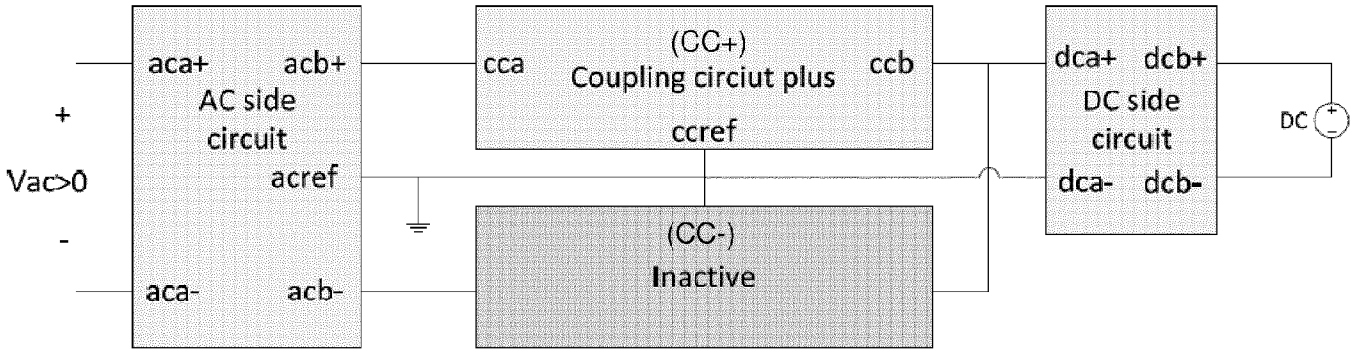
+
Vac>0
-
aca+
acb+
AC side
circuit
acref
aca-
acb-
cca
(CC+)
Coupling circiut plus
ccb
ccref
(CC-)
Inactive
dca+
dcb+
DC side
circuit
dca-
dcb-
DC

FIG. 3A

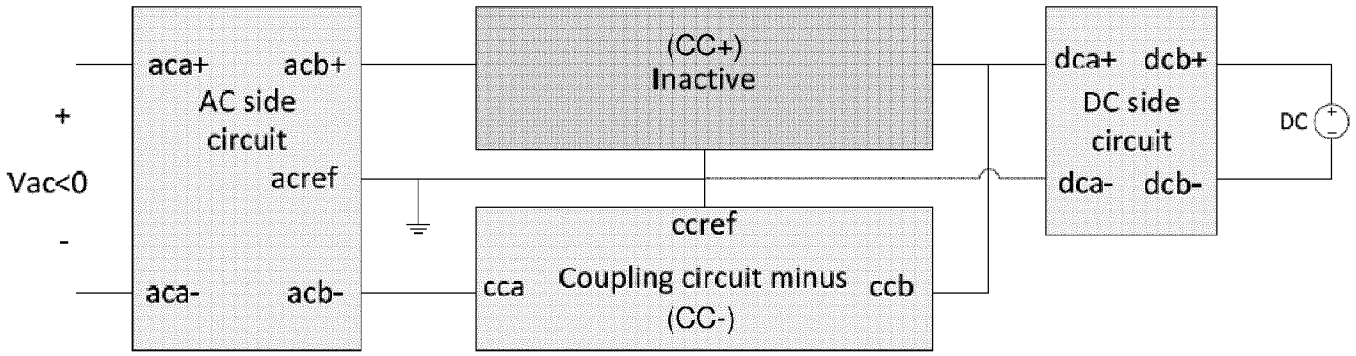
+
Vac<0
-
aca+
acb+
AC side
circuit
acref
aca-
acb-
(CC+)
Inactive
ccref
cca
Coupling circuit minus
(CC-)
ccb
dca+
dcb+
DC side
circuit
dca-
dcb-
DC

FIG. 3B

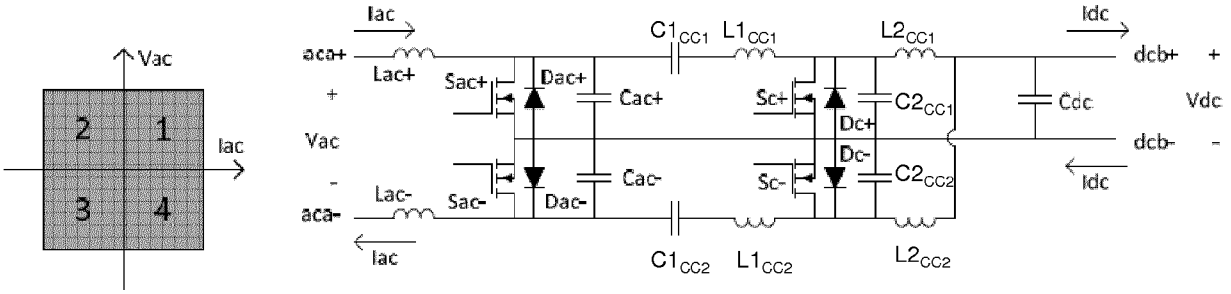

FIG. 4

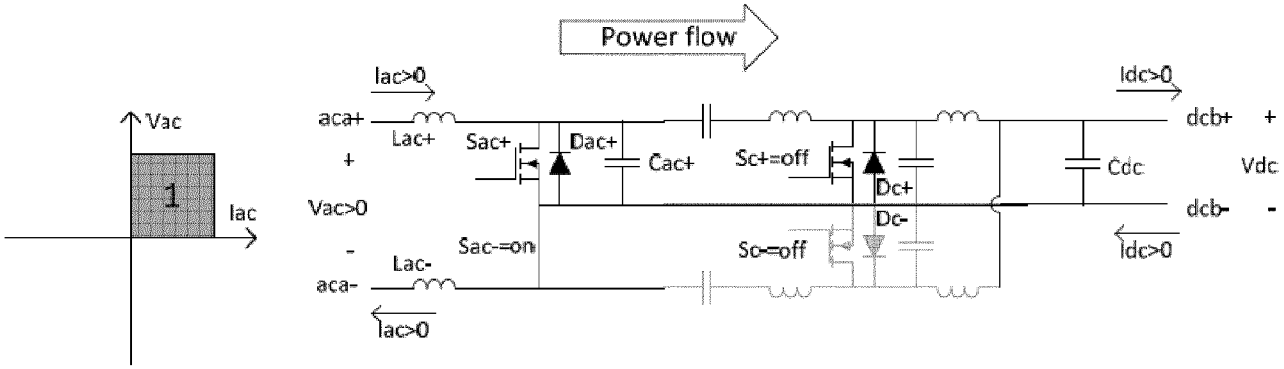

FIG. 5A

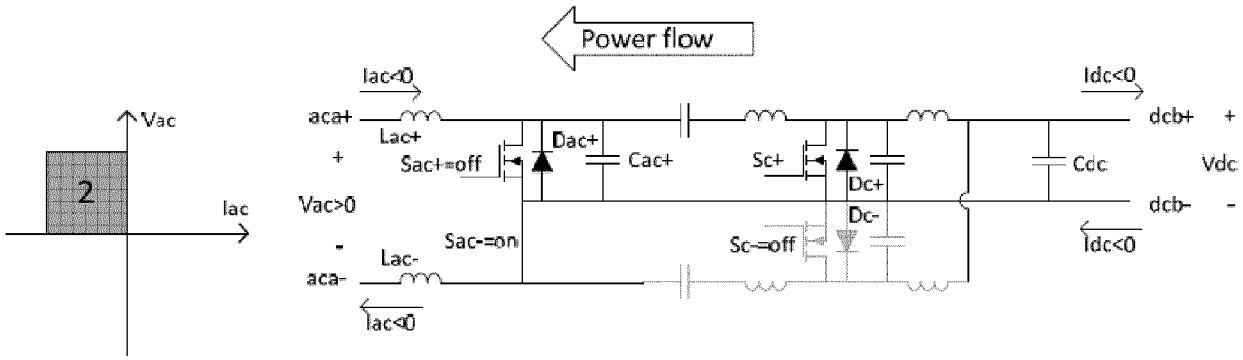

FIG. 5B

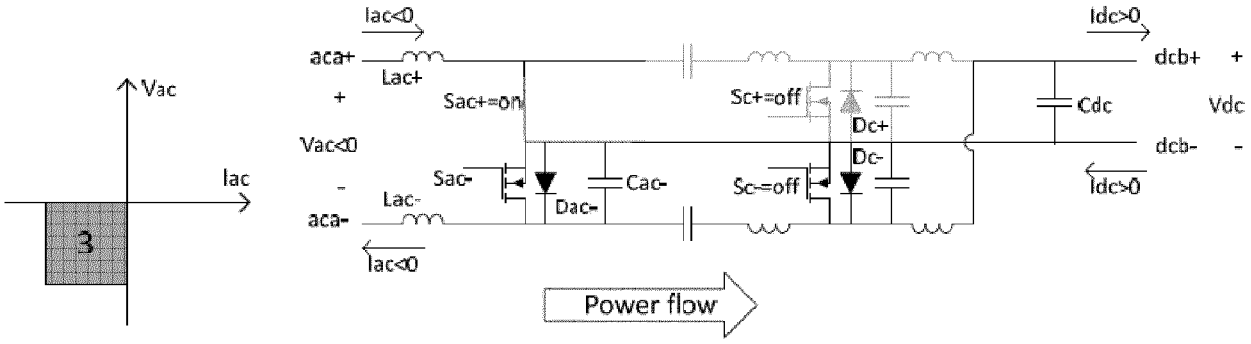
Vac
Iac
3
Iac<0
aca+
Lac+
+
Vac<0
-
aca-
Lac-
Iac<0
Sac+=on
Sac-
Dac-
Cac-
Sc+=off
Sc-=off
Dc+
Dc-
Idc>0
dcb+
+
Cdc
Vdc
dcb-
-
Idc>0
Power flow

FIG. 5C

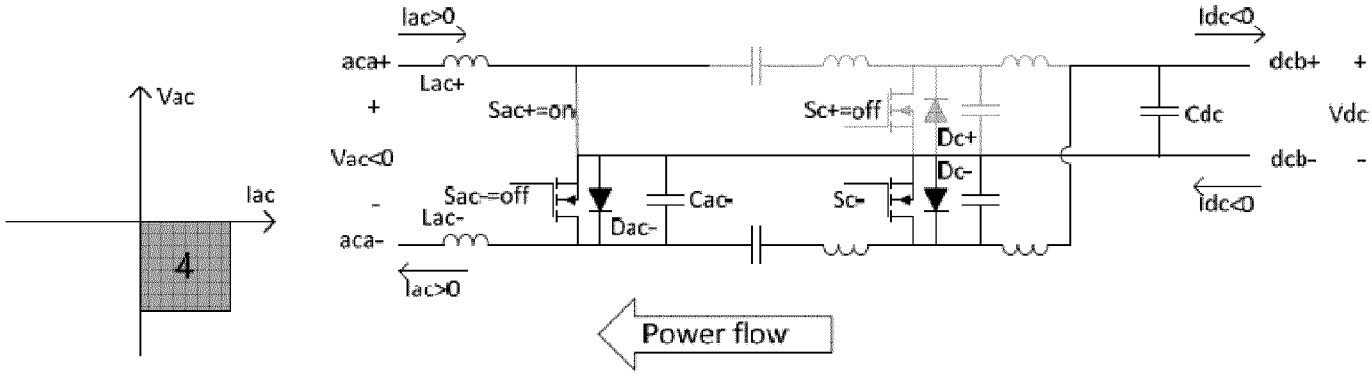
Vac
Iac
4
Iac>0
aca+
Lac+
+
Vac<0
-
aca-
Lac-
Iac>0
Sac+=on
Sac-=off
Dac-
Cac-
Sc+=off
Sc-
Dc+
Dc-
Idc<0
dcb+
+
Cdc
Vdc
dcb-
-
Idc<0
Power flow

FIG. 5D

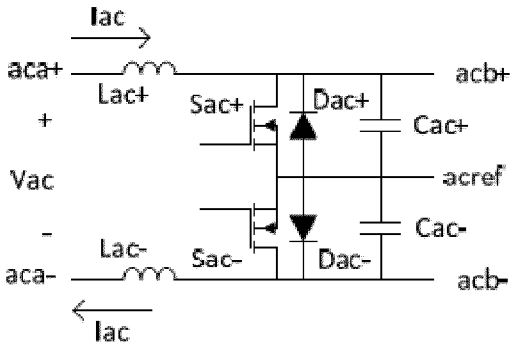

FIG. 6A

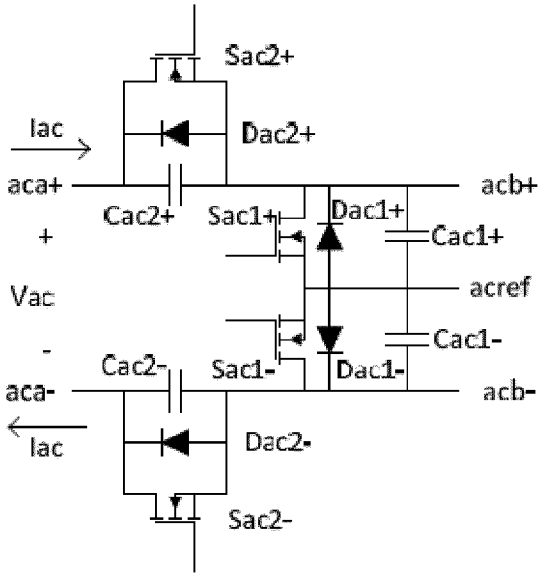

FIG. 6B

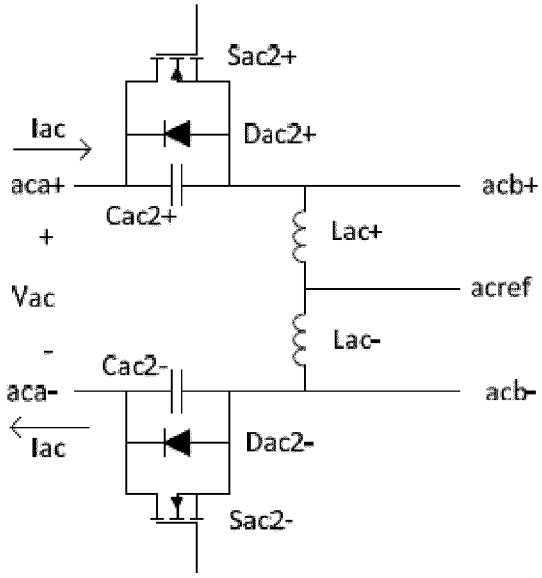

FIG. 6C

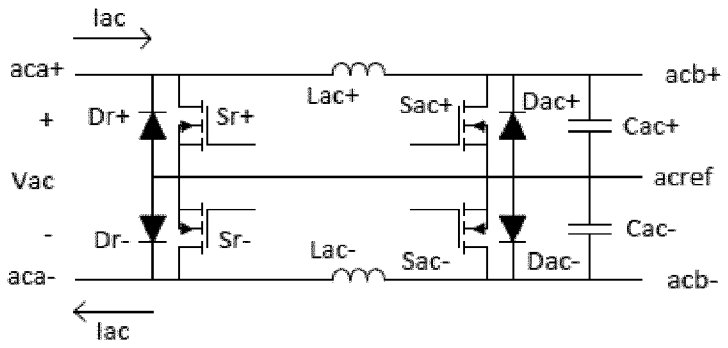

FIG. 7A

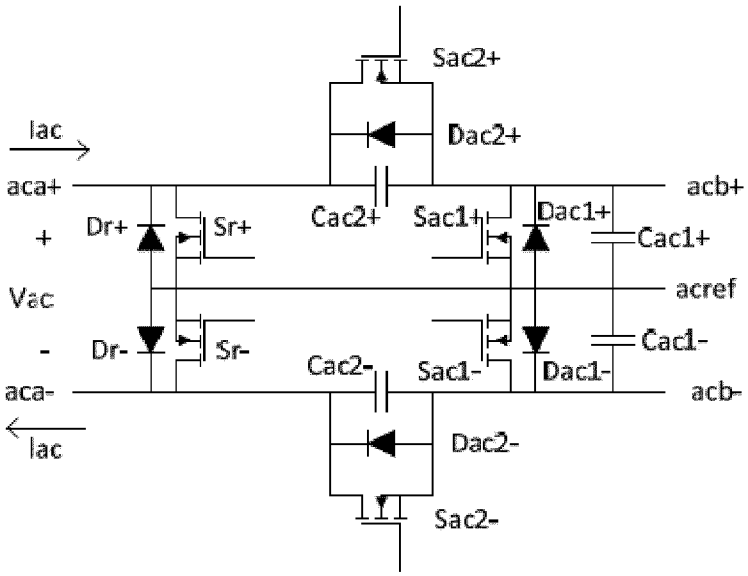

FIG. 7B

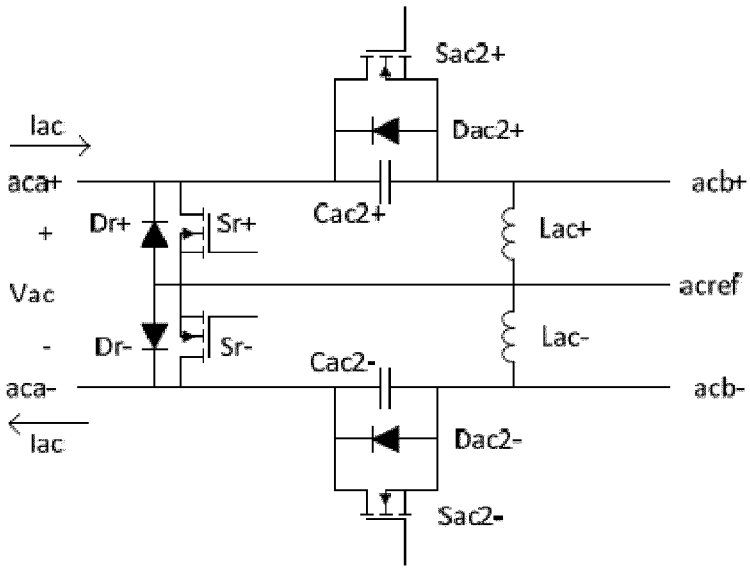

FIG. 7C

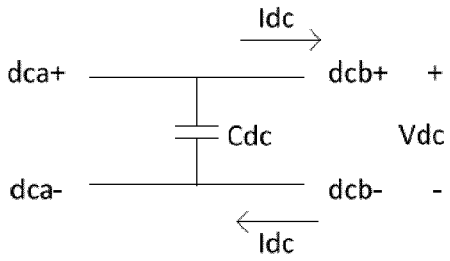

FIG. 8

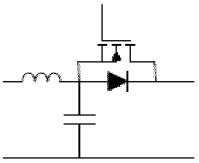

FIG. 9A

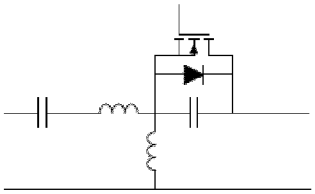

FIG. 9B

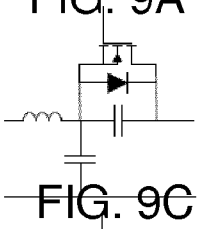

FIG. 9C

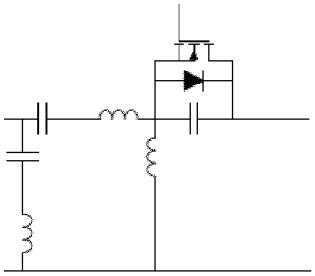

FIG. 9D

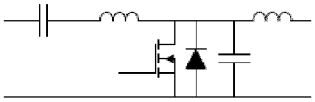

FIG. 9E

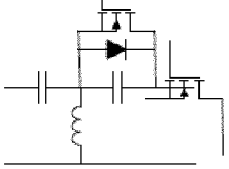

FIG. 9F

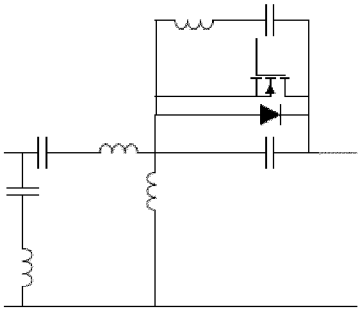

FIG. 9I

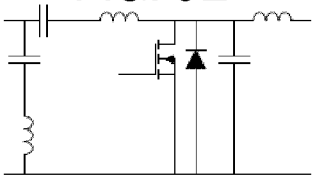

FIG. 9G

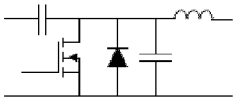

FIG. 9H

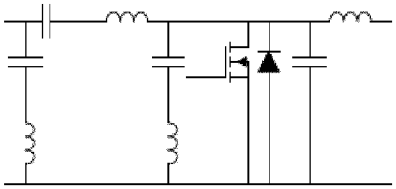

FIG. 9J

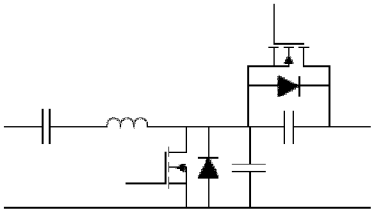

FIG. 9K

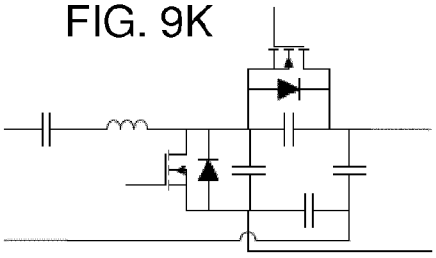

FIG. 9M

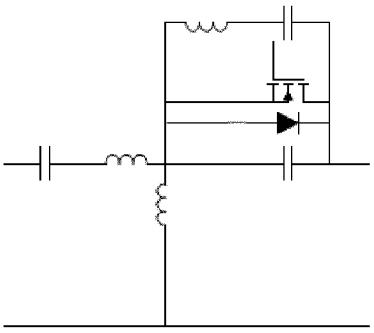

FIG. 9N

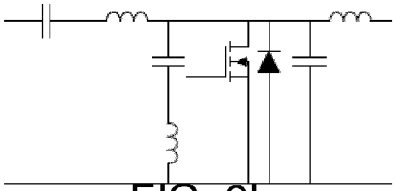

FIG. 9L

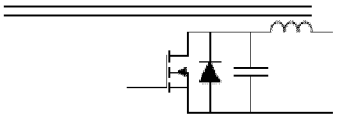

FIG. 9O

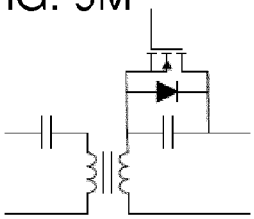

FIG. 9P

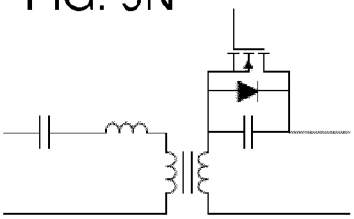

FIG. 9Q

INTERNATIONAL SEARCH REPORT

International application No
PCT/EP2019/061083

A. CLASSIFICATION OF SUBJECT MATTER
INV. H02M7/797 H02M7/217 H02M1/00 H02M7/48
ADD.

According to International Patent Classification (IPC) or to both national classification and IPC

B. FIELDS SEARCHED

Minimum documentation searched (classification system followed by classification symbols)
H02M

Documentation searched other than minimum documentation to the extent that such documents are included in the fields searched

Electronic data base consulted during the international search (name of data base and, where practicable, search terms used)

EPO-Internal, WPI Data

C. DOCUMENTS CONSIDERED TO BE RELEVANT

Category*	Citation of document, with indication, where appropriate, of the relevant passages	Relevant to claim No.
Y	EP 2 779 409 A2 (VANNER INC [US]) 17 September 2014 (2014-09-17)	1-5,8,9, 12-15
A	abstract paragraphs [0006], [0017] - [0019], [0022]; figures 4-9	6,7,10, 11

Y	MOTOKI KATAYAMA ET AL: "An interleaved class E² dc/dc converter", CIRCUITS AND SYSTEMS, 2008. ISCAS 2008. IEEE INTERNATIONAL SYMPOSIUM ON, 1 May 2008 (2008-05-01), pages 2833-2836, XP055516528, Piscataway, NJ, USA DOI: 10.1109/ISCAS.2008.4542047 ISBN: 978-1-4244-1683-7	1-5,8,9, 12-15
A	abstract; figures 1-4	6,7,10, 11

	-/--	

[X] Further documents are listed in the continuation of Box C.

[X] See patent family annex.

* Special categories of cited documents :

"A" document defining the general state of the art which is not considered to be of particular relevance

"E" earlier application or patent but published on or after the international filing date

"L" document which may throw doubts on priority claim(s) or which is cited to establish the publication date of another citation or other special reason (as specified)

"O" document referring to an oral disclosure, use, exhibition or other means

"P" document published prior to the international filing date but later than the priority date claimed

"T" later document published after the international filing date or priority date and not in conflict with the application but cited to understand the principle or theory underlying the invention

"X" document of particular relevance; the claimed invention cannot be considered novel or cannot be considered to involve an inventive step when the document is taken alone

"Y" document of particular relevance; the claimed invention cannot be considered to involve an inventive step when the document is combined with one or more other such documents, such combination being obvious to a person skilled in the art

"&" document member of the same patent family

Date of the actual completion of the international search	Date of mailing of the international search report
25 June 2019	02/07/2019

Name and mailing address of the ISA/	Authorized officer
European Patent Office, P.B. 5818 Patentlaan 2 NL - 2280 HV Rijswijk Tel. (+31-70) 340-2040, Fax: (+31-70) 340-3016	Van der Meer, Paul

1

Form PCT/ISA/210 (second sheet) (April 2005)

INTERNATIONAL SEARCH REPORT

International application No
PCT/ EP2019/061083

C(Continuation). DOCUMENTS CONSIDERED TO BE RELEVANT

Category*	Citation of document, with indication, where appropriate, of the relevant passages	Relevant to claim No.
Y	GLASER J S ET AL: "A 500 W push-pull dc-dc power converter with a 30 MHz switching frequency", APPLIED POWER ELECTRONICS CONFERENCE AND EXPOSITION (APEC), 2010 TWENTY-FIFTH ANNUAL IEEE, IEEE, PISCATAWAY, NJ, USA, 21 February 2010 (2010-02-21), pages 654-661, XP031649802, ISBN: 978-1-4244-4782-4	1-5,8,9, 12-15
A	abstract Equation 1; page 657, paragraph 3; figures 1-7	6,7,10, 11
A	KAZIMIERCZUK M K ET AL: "CLASS E ZERO-VOLTAGE-SWITCHING AND ZERO-CURRENT-SWITCHING RECTIFIERS", IEEE TRANSACTIONS ON CIRCUITS AND SYSTEMS, IEEE INC. NEW YORK, US, vol. 37, no. 3, 1 March 1990 (1990-03-01), pages 436-444, XP000128642, DOI: 10.1109/31.52739 abstract; figures 7-9	1-15
A	AL-KAABI AYSHA KEMADISH ET AL: "Bridgeless high voltage battery charger PFC rectifier", RENEWABLE ENERGY, vol. 56, 23 October 2012 (2012-10-23), pages 24-31, XP028596723, ISSN: 0960-1481, DOI: 10.1016/J.RENENE.2012.09.050 abstract; figure 2	1-15
A	ISMAIL E H: "Bridgeless SEPIC Rectifier With Unity Power Factor and Reduced Conduction Losses", IEEE TRANSACTIONS ON INDUSTRIAL ELECTRONICS, IEEE SERVICE CENTER, PISCATAWAY, NJ, USA, vol. 56, no. 4, 1 April 2009 (2009-04-01), pages 1147-1157, XP011248699, ISSN: 0278-0046 abstract; figure 2	1-15

1

INTERNATIONAL SEARCH REPORT

Information on patent family members

International application No
PCT/EP2019/061083

Patent document cited in search report		Publication date	Patent family member(s)			Publication date
EP 2779409	A2	17-09-2014	CA	2846668	A1	14-09-2014
			EP	2779409	A2	17-09-2014
			EP	3038246	A2	29-06-2016
			US	9692313	B1	27-06-2017
			US	9906169	B1	27-02-2018
			US	2014268927	A1	18-09-2014