Frequency Stability of Power System with Large Share of Wind Power Under Storm Conditions

Das, Kaushik; Guo, Feng; Nuño, Edgar; Cutululis, Nicolaos Antonio

Published in:
Journal of Modern Power Systems and Clean Energy

Link to article, DOI:
10.35833/MPCE.2018.000433

Publication date:
2020

Document Version
Publisher's PDF, also known as Version of record

Frequency Stability of Power System with Large Share of Wind Power Under Storm Conditions

Kaushik Das, Feng Guo, Edgar Nuño, and Nicolaos A. Cutululis

***Abstract*—The operation of transmission systems with large share of wind power is specially challenging under storm conditions. Under the stormy wind speed conditions, wind turbine protection system is designed to shut down the turbine to avoid excessive mechanical load. The sudden loss of wind power from large offshore plants is difficult to forecast accurately, which results in a large amount of power imbalance. The severity of such a wind power imbalance towards frequency stability needs to be studied for the future power systems. In addition, the overhead transmission lines can also be affected during storms, thereby increasing their probability of failure in the operation of power system under the islanded conditions. This paper investigates how the stormy weather can threaten the frequency stability of future Danish power system with large share of wind power and how to avoid the frequency instability through proper control and defence strategies such as high-voltage direct current (HVDC) control and load shedding. Sensitivity studies are performed for ramp rates of HVDC control, load shedding strategies, inertia of the system with different volumes of disturbances to understand their impact on frequency stability.**

***Index Terms*—Emergency control, frequency stability, storm, security, wind power.**

I. Introduction

CONCERNS for environment, security of supply, sustainable development are driving the traditional power systems all over the world towards the future power systems with large share of renewable energy sources (RESs). Denmark is one among the leading countries to operate with large share of RESs (mainly wind power) with future goal for providing 50% of the energy requirement by 2020. Most of the modern RESs such as wind power and solar photovoltaics (PV) are connected through power electronic devices. These generations do not inherently contribute to the inertia of the power system. Therefore, more and more challenges regarding the security and stability of the power system emerge when conventional generations are replaced by these modern RESs. RESs such as wind and solar power are inherently either variable or intermittent in nature. Power electronics increase the flexibility and controllability. Modern controllable wind turbines (WTs) are generally categorized as doubly-fed induction generator (DFIG) or fully rated converter (FRC) based on the dimension and connections of power electronic converters connected to the WT generator (WTG). The operation of transmission systems with large share of these kinds of WTs can provide fast power control and additional flexibilities. However, proper control settings are essentially required depending on the weather and grid conditions. These controls can be more critical for a power system under the extreme weather conditions such as storm. Storm not only increases the failure risk of an overhead line but also can make the emergency shutdown of wind power plant (WPP) plausible. Therefore, it is important to study how a power system with large share of wind power could survive from the extreme events caused by the stormy weather. Under stormy wind speed conditions, WT protection system is designed to shut down the turbine to avoid excessive mechanical load and protect turbine structure. The sudden loss of wind power from large offshore plants is difficult to forecast accurately and has been experienced by the Danish transmission system operator (TSO—Energinet in the past [1].

There are some studies for the impact of extreme weather on power systems. References [2] and [3] studied the impact of geomagnetic storms on power systems. European Network of Transmission System Operators for Electricity (ENTSO-E) made the studies to ride-through the European solar eclipse in 2015 [4]. Due to the immense importance of such studies, UK's TSO—National Grid has done the impact studies of solar eclipse due in 2026 on its power systems [5]. There were also some studies in terms of the operation and control in power systems under the extreme wind conditions. Reference [6] developed the methods for offshore wind power prediction under critical weather conditions. Reference [7] studied the co-ordination between hydro governors such as high-voltage direct current (HVDC) links during the shutdown of high wind in WPP. Preliminary studies on managing critical weather conditions in European power system were done in the 20th project [8]. However, in these studies, either large volume of wind power was not considered or complete controllability of WTs and other resources was neglected. These extreme wind events create power imbalances compared to power forecasting. These power imbalances may not have large impact on a well-connected power sys-

Manuscript received: July 3, 2018; accepted: September 11, 2019. Date of CrossCheck: September 11, 2019. Date of online publication: February 28, 2020.

K. Das (corresponding author), F. Guo, and N. A. Cutululis are with the Department of Wind Energy, Technical University of Denmark (DTU), Risø, Denmark (e-mail: kdas@dtu.dk; gf199336@gmail.com; niac@dtu.dk).

E. Nuño is with Suzlon Energy Limited, Rostock, Germany (e-mail: e.nunno@gmail.com).

DOI:10.35833/MPCE.2018.000433

tem like Danish power system but have major impact on the islanded power systems like Ireland or UK. However, it should be kept in mind that these power imbalances can create large cross-border power flows stressing the tie-lines. These tie-lines can also be more vulnerable if the storm passes over these tie-lines. A blackout that happened in South Australia State on September 28, 2016 in which three transmission towers were collapsed by the storm, proved the vulnerabilities of the transmission lines towards a storm [9]. Thus, the increased risk of failure in transmission lines needs to be considered in the extreme weather scenarios. In the case of the disconnection of such tie-lines, the interconnected systems can become islanded systems. There should be adequate reserves [10] to handle such situations. Also, emergency controls [11] and defence plans [12] need to be invoked to prevent blackout.

This paper aims to investigate the following research questions: ① Based on the possible storm events, how to ensure the stable operation of the system by activating extra reserves when the Western Danish (DK-W) grid loses large amount of wind power due to the storm? ② How could the control abilities of HVDC transmission lines and loads contribute to stable operation of the system when DK-W grid loses the synchronization with continental European (CE) grid due to the AC line failure caused by a storm? ③ What is the optimal allocation of regular primary control reserve and emergency control reserve for such events? The contribution of this paper is to demonstrate the methodology to assess the stability of power system through case studies when there is a prediction of storm. The paper also discusses the controller settings which need to be determined based on the case studies. The sensitivity studies provide the recommended control settings for HVDC connections to prevent frequency instability.

This paper is organized as follows. Section II gives an overview of the simulated DK-W power system in the predicted scenarios in 2020. Section III deals with the dynamic modelling of the power system and its components as well as the defence plans for frequency stability. Section IV demonstrates an operation methodology to assess the impact of the storm. Section V presents two case studies where the DK-W power system is connected to the CE power system in the first case and the DK-W power system is isolated from CE power system in the second case. The sensitivity studies are performed with respect to the inertia, HVDC ramp rate, volume of disturbance and load shedding plans. Section VI concludes the paper.

II. Overview of DK-W Grid

The Danish power system is electrically split into two areas: Eastern and DK-W power systems. DK-W grid is synchronized with the CE grid through the AC transmission lines to Germany while Eastern Danish grid is synchronized with the Nordic grid through AC transmission lines to Sweden. In this paper, the DK-W power system in the scenario of 2020 with large share of wind power is chosen as study case. The DK-W power system is well-known for its very high wind penetration. According to [13], the total wind power capacity in DK-W power system is expected to reach about 3900 MW by 2020, which is able to cover the total Danish load in a windy day (which is also true today). Among the total wind power capacity, large offshore WPPs contribute up to 1176 MW that are vulnerable to shut down due to the higher wind speeds and smaller geographical distribution. The strong interconnections between Denmark and its neighboring countries have represented a cornerstone in order to enable the high penetration of wind power. Although DK-W grid is connected to the Nordic grid mostly by sub-sea HVDC lines, thus not sensitive to extreme weather conditions, the connection to CE grid is only through the vulnerable AC overhead lines with Germany. Figure 1 shows the electrical infrastructures of the DK-W grid in 2020 [13]. It is shown that four HVDC lines are responsible for the power exchange between Western Denmark and Norway, Sweden, Netherlands and Eastern Denmark.

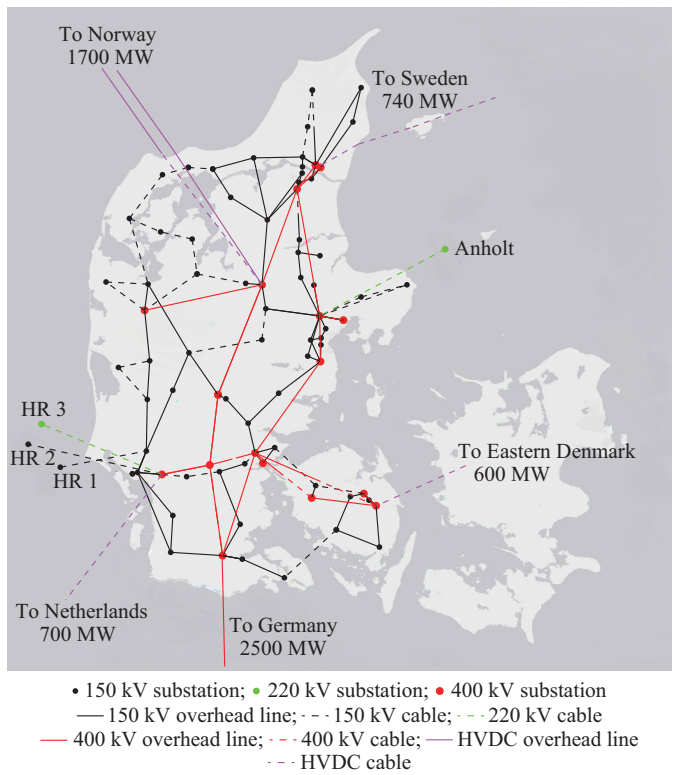

Fig. 1. Transmission and interconnection network of DK-W grid in 2020.

As shown in Fig. 1, DK-W grid compromises two voltage levels: 400 kV and 150 kV. Most of the centralized large power stations are connected to 400 kV grid. The overall transmission grid is connected to distribution network through, the 150 kV grid. Two large offshore wind farms (OWFs), Horns Rev 1 and Horns Rev 2, are marked as HR 1 and HR 2 in Fig. 1. They are connected to the onshore grid by 150 kV cables. The existing Anholt and the future Horns Rev 3 (marked as HR 3) wind farms, whose capacities are up to 400 MW, are connected through 220 kV cables. It applies for both 400 kV and 150 kV transmission lines that most part of the grid is connected through overhead lines.

A. Interconnections

The planned interconnections of DK-W grid to Eastern Denmark and neighboring countries are illustrated in Fig. 1 and can be summarized as follows:

1) To Eastern Denmark: HVDC link called Great Belt Link (GBL) with the capacity of 600 MW.

2) To Germany: AC interconnection will be expanded to 4×400 kV overhead lines with total capacity of 2500 MW [14].

3) To Netherlands: HVDC cable called COBRA cable with the capacity of 700 MW.

4) To Norway: HVDC interconnection called Skagerrak 1-4 interconnections with total capacity of 1700 MW.

5) To Sweden: HVDC interconnection called Konti-Skan with the capacity of 740 MW.

B. Generation Units in DK-W Grid

Only decentralized gas turbine generators, centralized steam turbine generators, onshore and offshore WPPs are included in this paper. Solar, hydro and other types of generations are neglected due to the smaller overall capacity and for the purpose of simplification.

1) Conventional Units

The technology of combined heat and power (CHP) plant is widely used in Denmark due to the demand for heat in the Danish households, and it has a great efficiency in fuel utilization. CHP plants can be classified as centralized CHP (CCHP) plants which are usually located close to large cities and decentralized CHP (DCHP) plants that are close to smaller cities or towns. Apart from the difference in location, the Danish CCHP plants are mostly represented by steam turbine power plant, while DCHP plants are mostly represented by gas turbine power plants [13]. The gas turbine generators are usually used in two basic configurations: single-cycle (or open cycle) gas turbine (OCGT) and combined-cycle gas turbine (CCGT).

2) WPPs

The Danish power system has large share of wind power with thousands of onshore turbine sites widely spread inside the country and several large OWFs standing close to the coast. The details about the four large offshore WPPs in DK-W grid are outlined in Table I [13].

TABLE I
LARGE OWFS IN DK-W GRID IN 2020

WPP	No. of turbines	Capacity (MW)
HR 1	80	160.0
HR 2	91	209.3
HR 3	49	406.7
Anholt	111	399.6

3) Overall Capacity

The total capacities of the dominating generation type in the future Western Denmark are summarized in Table II [13]. It can be seen that the total installed wind power capacities will overtake the total conventional capacities. The total offshore capacities includes the capacities of large OWFs as well as the near-shore and small OWFs.

TABLE II
GENERATION CAPACITIES OF WESTERN DENMARK IN 2020

Generation type	Capacity (MW)
CCHP (steam)	1847
DCHP (gas)	1354
Wind (onshore)	2488
Wind (offshore)	1337

III. DYNAMIC MODEL OF POWER SYSTEMS

It is common to use single-bus delta model for frequency stability studies as shown in Fig. 2(a) [15]. Mathematically, this model can be represented as (1).

$$\Delta P_G - \Delta P_L + \Delta P_{EX} = \Delta\omega(2Hs + D) \tag{1}$$

where H is the system inertia constant in s; D is the dimensionless damping coefficient that represents the damping effect from the frequency dependent load; $\Delta\omega$ is the rotor speed deviation which is equal to the frequency deviation Δf; ΔP_G and ΔP_{EX} are the total deviations in generated electrical power and interchange, respectively; and ΔP_L is the total deviation of electrical load (mainly due to the load shedding in the considered studies).

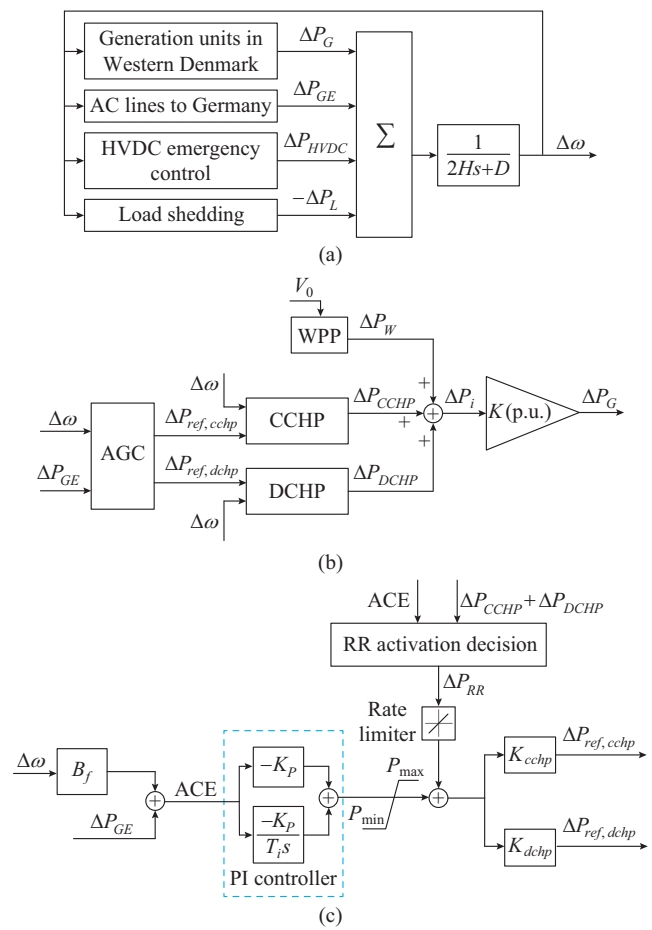

Fig. 2. Schematic model for frequency control studies. (a) Dynamic model in DK-W grid. (b) Generation units in DK-W grid. (c) Block diagram of automatic generation control (AGC) and manual regulation.

In this paper, two-area system modelling approach discussed by [16] is used to study the interaction between DK-W and CE grids. The inertia of the system mainly depends on the online synchronous generations and loads. It is very difficult to estimate the value of the inertia constant in real time. However, the inertia of an islanded system can be low with large share of wind power. Therefore, sensitivity studies for different values of inertia have been performed in this paper. Damping constant of 1%/Hz is used based on [17]. The power exchange P_{EX} in (1) is split to the power deviation on AC and HVDC lines. The generation units in DK-W grid from Fig. 2(a) are dominated by WTs (operating with initial wind speed of V_0), CCHP plants and DCHP plants, which are mainly considered as shown in Fig. 2(b). Following any power imbalance, the frequency of the power system ($\Delta\omega$) deviates from the steady-state value. This imbalance is handled using automatic reserves called frequency containment reserve (FCR). The aim of FCR is to provide fast frequency regulation to a disturbance through the speed-droop characteristic of the turbine governor. The currently recommended speed-droop characteristics in European grids are given in [17]. Based on these characteristics, FCR is designed as:

1) For a dead band of ±20 mHz, the units operate with constant power and do not respond to the frequency change.

2) Between ±20 mHz and ±200 mHz, a linear droop is followed.

3) It is completely released when the frequency deviation reaches ±200 mHz.

4) FCR is assumed to be ±27 MW in DK-W grid based on [18].

5) FCR is proportionally distributed among CCHP and DCHP units based on their online capacity.

A. Frequecy Control Process Model

Frequency restoration reserve (FRR) aims at restoring the frequency to the normal range, replenishing the used FCR and maintaining the net power exchange to the scheduled values. In CE grid, a central AGC is used for the deployment of FRR. AGC model is shown in Fig. 2(c), where B_f is the bias factor in MW/p.u., which represents the self regulating effect of load and the primary control from conventional units as given in (2) [16].

$$B_f = 50(\beta_{DK\text{-}W} + 0.01P_{load}) \tag{2}$$

where $\beta_{DK\text{-}W}$ is the primary characteristic in MW/Hz; and P_{load} is the online total load in MW (considering the load damping effect of 1%/Hz). The signal area control error (ACE) represents the required change in the generation in this area to achieve a new balance after a disturbance. A proportional-integral (PI) controller collects the historical area control error and adjusts the power set point of conventional units. It is assumed that the power flow from Western Denmark to Germany is positive, so the negative signs of the PI block aim to reduce the generation in Denmark when Denmark delivers more power than the scheduled value to Germany. The proportional gain K_p and integral time T_i of the PI controller are chosen to be 0.2 and 55, respectively, which follow the CE guidelines. A limiter is applied after the PI controller to limit the signal to the available FRR reserve. The FRR reserve is limited to ±90 MW according to [13].

The replacement reserve (RR) is usually activated manually after FCR and FRR to restore them to the required value in order to be prepared for a further system imbalance. As shown in Fig. 2(c), the "RR activation decision" block is used to represent the decision-making process in the control room [10]. The two constants K_{cchp} and K_{dchp} proportionally distribute the required change in generation to CCHP and DCHP units, respectively.

B. Conventional Power Plants Model

The CCHP model is developed based on [18]-[20]. A schematic diagram of the CCHP model is illustrated in Fig. 3(a) which consists of three main blocks: speed governor, boiler and steam turbine. In speed governor, control valve output CV or ΔP_C is moderated based on the change in frequency or speed ω. The boiler turbine is represented as a time delayed function of load reference LR to the turbine main steam pressure P_t. The thermal power in turbine P_{turb} is converted to shaft mechanical power P_{mech}. In addition, a rate limiter is incorporated. Due to thermal dynamic and mechanical constraints, the load reference to the boiler is limited to a certain ramp rate, without which the control system may experience extra wear and tear [18]. A representative model is chosen for gas-based DCHP based on [18], [21], [22] as shown in Fig. 3(b). The gas turbine is represented by three blocks: power limitation, power distribution and gas turbine dynamics. The details of all these blocks and parameters are available in [23].

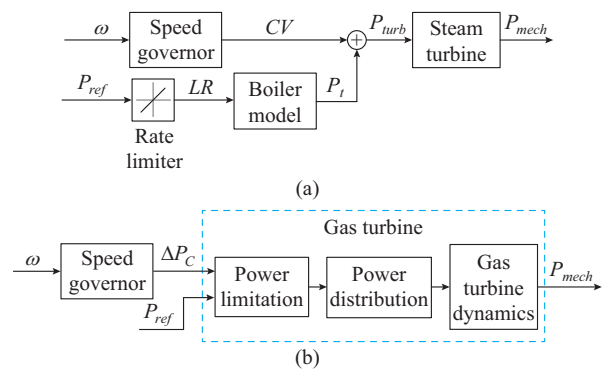

Fig. 3. Schematic diagram of conventional power plants. (a) Schematic diagram of CCHP model. (b) Schematic diagram of DCHP model.

C. Wind Power Control Model

This paper uses historical weather data with a frequency model of power system to analyse the frequency stability for a future system with very large-share wind power. By doing so, realistic and coherent wind power production imbalances under extreme weather conditions can be simulated, accounting for the spatial distribution and the temporal behavior of wind speed. In this direction, CorRES is used to generate hour-ahead forecasting and real-time available wind speed for the considered stormy scenarios. CorRES is a wind power simulation model developed in Department of Wind Energy, Technical University of Denmark. It can simulate the wind speed or power time series in different user specified

locations based on the meteorological re-analysis data considering spatial correlation and temporal structure between those sites. The details of these simulations of wind speed and wind power can be found in [24]. The frequency and active power control for normal wind speed is implemented as shown in Fig. 4 [11]. The control model consists of delay representation of communication/measurement delay and power order delay. The measurement delay $T_{delayMeas}$ is assumed to be 100 ms and power order delay T_{delayP} is assumed to be 0.5 s. $P_{wind,\max}$ and $P_{wind,\min}$ are the available up-reserve and down-reserve power, respectively. In this paper, up-reserves from WTs are not considered since WTs operate under down-regulated conditions which is contrary to the motivation. Ramp rates are considered as ±0.1 p. u./s and the droop is considered as 4%. $P_{setpoint}$ is calculated based on the available wind power generated from CorRES simulations. The output of this control model is the total power output from WTs represented by P_{ord}. However, high wind speed shutdown (HWSD) control [25] is implemented for control at extreme wind speed. As shown in Fig. 5, the controller sends the shutdown signal (represented by downward arrows) to the brake actuator either when: ① instantaneous wind speed reaches 32 m/s (black line); ② 30-second mean wind speed reaches 28 m/s (magenta line); ③ 10-minute mean wind speed reaches 25 m/s (red line).

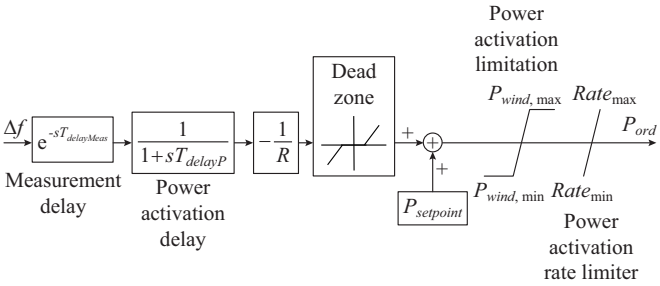

Fig. 4. Frequency control model from WT.

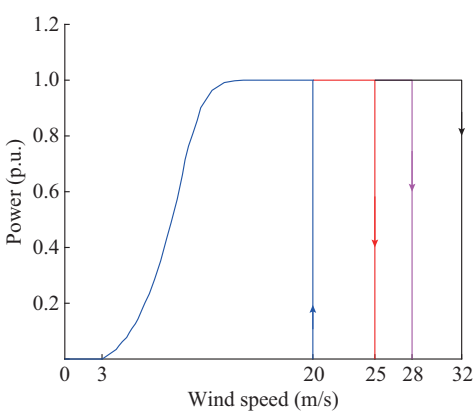

Fig. 5. WT power curve with HWSD control.

To avoid over reaction of the turbine, a conservative restart (represented by upward arrow in Fig. 5) wind speed is chosen as 20 m/s, indicating that turbines start to capture wind energy again when a 10-minute wind speed is measured below 20 m/s (blue line).

D. AC Interconnection with CE Grid

AC interconnection and CE grid are established based on the two-area system model by [16]. The DK-W grid is considered as one system and CE grid is considered as the other system. A simplified equivalent generator model is used to represent the general response of the conventional units in the CE grid. This generator model is coupled with a measurement filter (0.1 s), dead band (± 20 mHz) and a governor. The droop characteristics are chosen based on ENTSO-E report [17]. The system inertia and damping of the CE grid are chosen based on ENTSO-E frequency stability evaluation criteria report [15].

E. HVDC Emergency Power Control

HVDC technology has the capability of very fast control of power (typically independent control of active and reactive power in voltage source converter (VSC) -HVDC systems) [26]. In this paper, all the HVDC links between DK-W grid and neighboring systems are aggregated as single HVDC link. HVDC emergency response is modelled as constant ramp with communication delay. The parameters are summarized in Table III.

TABLE III
PARAMETERS OF AGGREGATED HVDC MODEL

Model	Activation frequency (Hz)	Deactivation frequency (Hz)	Delay (s)
Over frequency	50.3	50.25	0.1
Under frequency	49.8	49.85	0.1

F. Under Frequency Load Shedding (UFLS)

UFLS is the last resort to avoid the frequency drops and the blackout. In this paper, UFLS plan recommended by ENTSO-E is chosen [27]. The actual load shedding plan varies by different countries, it is recommended by ENTSO-E that the amount of load which needs to be shed should between the lower load shedding plan and the higher one as shown in Fig. 6. These higher and lower load shedding plans are used for sensitivity analysis in Section V-B.

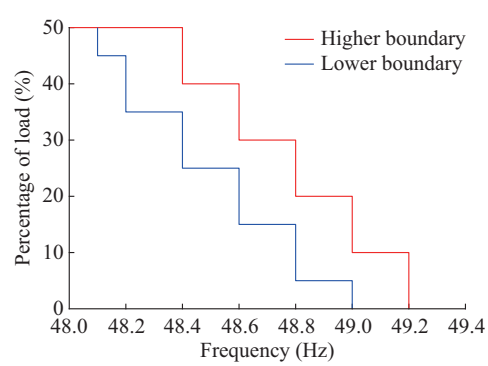

Fig. 6. Recommended load shedding plan by ENTSO-E.

G. WT Disconnection Plan

WT disconnection plan is implemented as an emergency defence plan for over-frequency scenario which disconnects the WTs at 51 Hz. Fast disconnections of WTs are possible

because they have less impact on the health of WTs compared to conventional generations.

IV. Methodology for Impact Assessment for Storm

Figure 7 shows the flowchart of the methodology for impact assessment of storm on power system. Generally, the planning for storm handling is done at least day-ahead before the storm. Forecast errors can be high in day-ahead time period resulting in uncertainty in the path of storm. The path of storm is particularly important because the WPPs in the path of storm will shut down due to storm. In order to study all the possibilities, multiple realizations of storms may be simulated. The aim of simulating these realizations is to identify the worst case scenario for the considered storm. The number of realizations n depends on the degree of confidence of the forecasts available for the storm. For each of these realizations, balance and reserve requirements for handling the storm should be assessed in the interconnected operation mode since certain volume of balancing reserves can be obtained from neighbouring regions. Additionally, since storms do not affect all the regions at the same time, the impact of the imbalances can be low. The impacts of storm on Danish system in interconnected operation with CE network are discussed in details in Section V-A. Analysis is done to simulate how fast and what volume of wind power will be disconnected during the storm. Then, analysis is performed to estimate whether available power and technology within the control area (DK-W) is sufficient to handle the imbalance created by the shutdown of wind farms. In case of unavailability of adequate volume of energy within the control area, provision should be made to acquire the power from neighbouring control areas such as availability of certain reserve capacity in the tie-line.

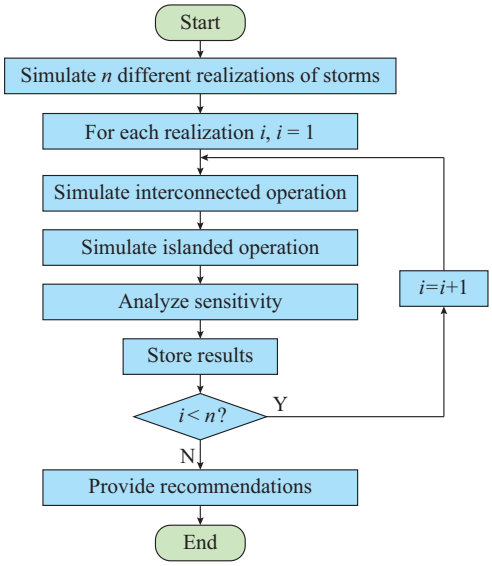

Fig. 7. Flowchart of storm assessment methodology.

The storm may pass through the tie-lines thereby disconnecting the concerned system into islanded operation mode. Islanded system might have frequency stability problem due to the reduced inertia. Therefore, islanded operation of the concerned control area is discussed in details in Section V-B. Since the estimation of inertia is difficult and uncertain for such an islanded system, sensitivity studies are performed for different values of inertia, so as to assess the required control settings. Faster control can be essentially required to avoid instability if the inertia is low. Based on these sensitivity studies, recommendations are provided for HVDC emergency control since frequency containment reserve in DK-W grid is limited. As mentioned before, the security assessment needs to be done for the worst case scenario. Therefore, the results presented in this paper are based on the realization from the storm which affects the Danish power system most.

V. Case Studies and Sensitivity Analysis

In order to study the impact of a possible severe storm in DK-W system, historical storm event on January 8, 2005 is simulated. This storm was one of the worst storms in recent times where the measured 10-minute average wind speed reached up to 35m/s. Since DK-W grid is connected to the CE grid, the impact of this simulated storm is studied in future interconnected DK-W system. However, as mentioned earlier, tie-lines are also vulnerable under stormy conditions due to weather stress and/or power rerouting. Case studies where DK-W grid is isolated from CE grid due to the disconnection of tie-lines are studied as well. Sensitivity studies are performed for different values of inertia and HVDC emergency control capabilities.

It is assumed that required power reserve to maintain stability of the system is available in neighbouring regions. This assumption is valid as long as the disturbance is limited within 3000 MW and the DK-W grid is connected with CE grid since the dimensional fault used for reserve dimensioning in CE grid is 3000 MW. In the case of islanded operation, fast HVDC emergency control assumes that the generation technology connected to the neighbouring regions has the same ramping capability. In case such ramping capabilities are not available, the ramp rates of HVDC interconnectors will also be limited. Sensitivity studies performed in Section V-B will be even more important in such scenarios to recommend correct settings for load shedding.

A. Interconnected Operation

The simulated wind power with HWSD control is shown in Fig. 8. Generally, the power system are planned and operated based on hour-ahead (HA) prognosis of the wind power generation [10]. The real-time imbalance from the HA prediction is handled using reserves. Figure 8 shows the HA prediction and real-time available power for the total wind power capacity in DK-W grid. Forecast error (difference between HA prediction and actual power) is also plotted. It can be seen that a large prediction error occurs from 05:00 to 06:00. This error is mainly due to the shutdown of three large OWFs: HR 1, HR 2, HR 3 and some near-shore wind farms. Because of small geographical distribution, the wind speeds in these three offshore farms reach 25m/s almost simultaneously. As a result, the wind power drops with a rela-

tively large gradient of around 1100 MW. It is assumed that the load is constant and there is no failure of other equipment in the system. Prior to the shutdown event, the power exchange, generation and load in DK-W grid are considered based on historical market data [13]. The effect of self-regulated load is considered to be 1%/Hz or 30 MW/Hz and the system inertia in DK-W grid is assumed to be 15000 MWs. Table IV summarizes the operation point prior to the storm.

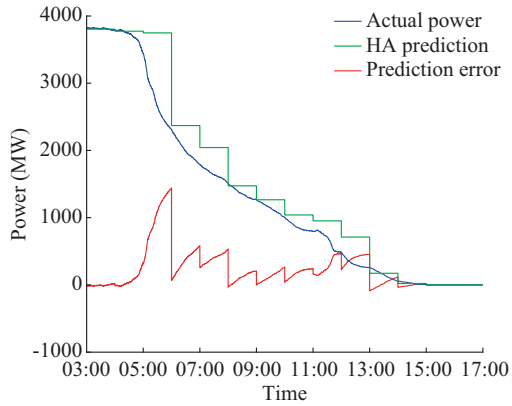

Fig. 8. Simulated total wind power (HWSD control) and HA prediction in DK-W grid.

TABLE IV
SUMMARY OF POWER SYSTEM STATUS PRIOR TO STORM

Parameter	Value (MW)
DK-W HVDC generation	–3240
DK-W & Germany generation	2000
CCHP generation	540
DCHP generation	250
Wind generation	3450
Total load	3000

Note: the net exchanges on all HVDC lines.

Figure 9 shows the simulation results with the wind power drop between 05:00 and 06:00. During the first 10 min, 400 MW of wind power is lost which is not compensated by the secondary reserve in DK-W grid. The generation deficit drops to around 250 MW around the end of the first 10 min which is compensated by the power flow from Germany through the tie-line as shown in Fig. 9(b). The maximum instantaneous power required to be imported from Germany is around 250 MW which is much less than total capacity of the AC tie-lines (2500 MW). After the first 10 min, the continuously activated manual reserve contributes to reduce the generation deficit in DK-W grid. The released manual reserve is shown in Fig. 9(d). In total, 1010 MW reserve is required. Based on this study, 1010 MW of slow reserves can be purchased and allocated in the neighbouring region beforehand for the hours when the storm is predicted. Allocating these reserves will also make sure that the required capacity of tie-line is also reserved. The intervals between each decision are more than 10 min, which gives enough time for the operator in the control room to make decisions. With the initial counted production, the total productions of CCHP and DCHP units reach 1270 MW and 620 MW, respectively, which do not reach the maximum installed capacity in DK-W grid as shown in Fig. 9(b). However, this can be challenging in future power system if substantial amount of conventional power plants are decommissioned. Since CE grid has reserve of 3000 MW and power imbalances in other places in CE grid are not simulated, these power imbalances do not cause the frequency to go outside the normal range as shown in Fig. 10.

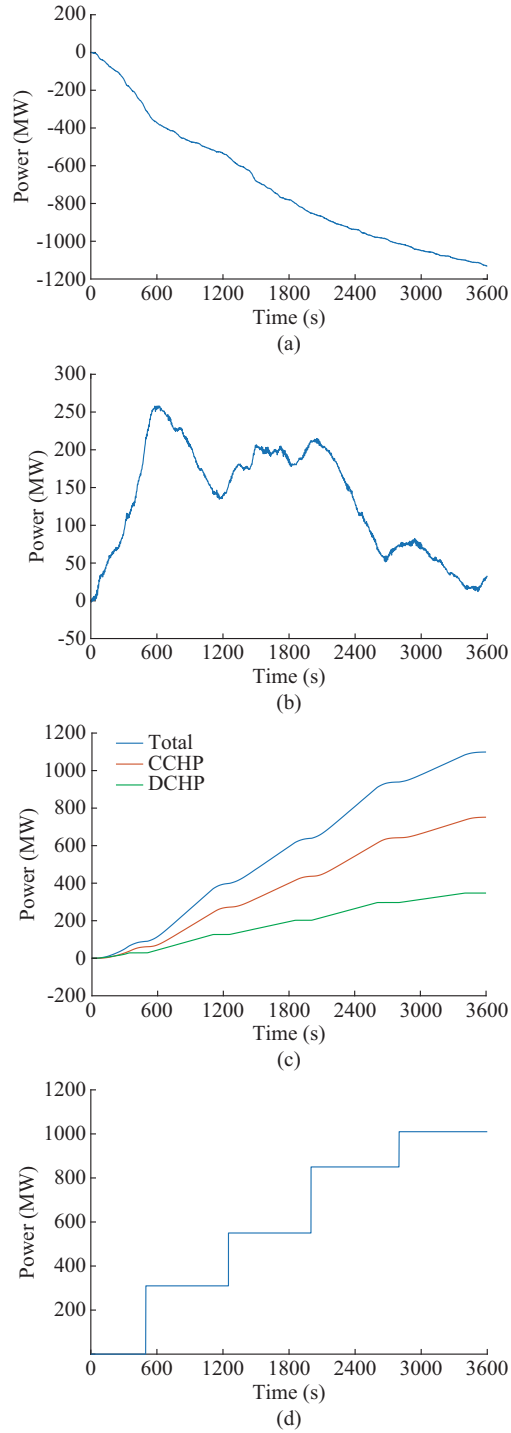

Fig. 9. Simulation results between 05:00 and 06:00. (a) Deviation of wind power. (b) Deviation of power flow. (c) Deviation of conventional power in DK-W grid. (d) Amount of released manual reserve.

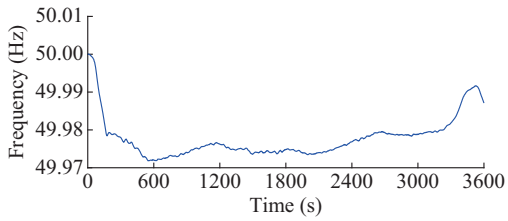

Fig. 10. System frequency during interconnected operation.

However, it should be noted that in the case of large storm in North Sea in future European scenarios, this imbalance can be quite large and can have impact on the frequency of the system. These results show that extreme weather events like storms can shut down substantial amount of wind power. However, the ramp rate of such reduction is slow enough to be handled by slower manual FRR reserves. In future, with even larger share of WPPs, large volume of FRR should be made ready in order to handle storm scenarios. Another possibility can be to operate the WPPs in curtailed operation prior to the storm in order to have less power imbalance which might be challenging due to the inaccuracies of storm forecasting. The recommendations based on the performed case studies could be availability of substantial volume of reserve power (around 1000 MW in this case). In order to procure this volume of reserve from neighbouring regions, sufficient capacity should be available in tie-lines and HVDC interconnectors. Since these are slow manual reserves, they can be acquired before day-ahead market operation of the spot market.

B. System Separation from CE Grid

It can be seen from previous results that short-term frequency stability of DK-W grid could be maintained with the support from CE grid. However, in the case of separation of DK-W grid from CE grid, the dynamic stability of DK-W grid needs to be ensured using FCR and/or emergency defence plans such as HVDC control, UFLS, over-frequency generation disconnection, etc.

The total power transfer capacity between DK-W and Germany is expected to be 2500 MW through 2 circuits of 1250 MW each. Sensitivity studies are performed for power loss from 1800 MW to 2500 MW with power flow direction from Germany to DK-W for under-frequency event and vice versa for over-frequency event. The primary reserve that the conventional units are able to provide is assumed to be 27 MW which is almost negligible compared to the disturbance. Therefore, the frequency stability needs to be ascertained by emergency HVDC control and load shedding. Ramping capability of the HVDC control depends on generation sources that provide power during the under-frequency as well as HVDC technology. In future, more and more VSC-HVDC converters are expected to be installed. VSC-HVDC converters have faster control capabilities than line commutated converters (LCC).

Figure 11 shows an example of frequency fluctuations following the system separation. The initial conditions for this specific case study is provided in Table V. Load shedding is activated at 49.2 Hz. It can be seen from Fig. 11 that the system is stable through load shedding and emergency control of HVDC.

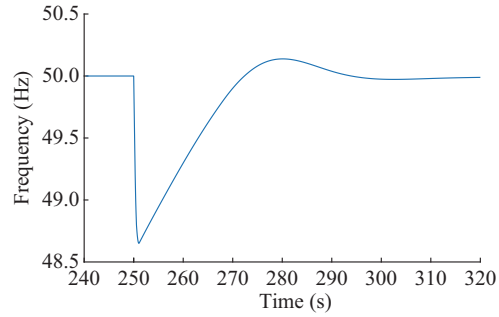

Fig. 11. Frequency following system separation.

TABLE V
INITIAL CONDITIONS FOR CASE STUDY OF FIG. 11

Parameter	Value
DK1 and Norway (HVDC) power exchange	–1500 MW
DK1 and Sweden (HVDC) power exchange	–700 MW
DK1 and The Netherlands (HVDC) power exchange	200 MW
DK1 and Germany (AC) power exchange	1300 MW
DK1 and DK2 (HVDC) power exchange	–590 MW
CCHP production	340 MW
DCHP production	250 MW
Wind production	3200 MW
Total load	2500 MW
Inertia	12000 MWs
Damping	25 MW/Hz
HVDC ramp	600 MW/s

Note: negative exchange denotes exported power; DK1 represents Western Denmark, DK2 represents Eastern Denmark.

However, the magnitude of the disturbance and the inertia of the considered power system following system separation is uncertain. Therefore, different ramp rate capabilities of HVDC control are studied for different volumes of disturbances. Load shedding schemes also have large impact on frequency stability of the system. Therefore, sensitivity of 2 load shedding schemes—higher and lower load shedding plans from ENTSO-E recommendation [27] is studied. Three different inertia values H of 6000, 9000 and 12000 MWs are used to study the impact of inertia on frequency stability. The parameters for sensitivity studies are summarized in Table VI where P_{GE} is the power flow lost between DK-W and Germany which is considered as disturbance and the net exchanges on all HVDC transmission lines.

The simulation results are shown in Fig. 12, the shaded region means that the minimal frequency after the contingency is above 48 Hz which is assumed as the success criterion for frequency stability. From Fig. 12, it can be seen that both larger inertia constant and more aggressive load shedding plan give larger safe region. If high ramp rate capability for HVDC emergency power is not available, the large disturbance scenarios must be avoided.

TABLE VI
PARAMETERS IN SENSITIVITY ANALYSIS OF UNDER-FREQUENCY SCENARIO

Parameter	Value
DK-W HVDC	–2590 MW
DK-W and Germany	P_{GE}
CCHP production	540 MW
DCHP production	250 MW
Wind production	4800 MW – P_{GE}
Total load	3000 MW
Damping	30 MW/Hz

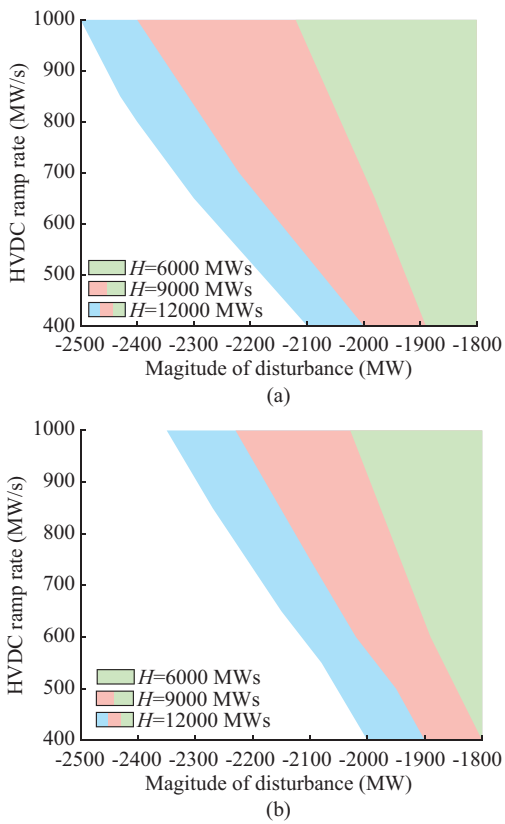

Fig. 12. Simulation results of sensitivity analysis in under-frequency scenario. (a) Higher load shedding plan. (b) Lower load shedding plan.

In other words, the power transmitted through the AC overhead lines should not be too high in a stormy day when the risk of failure is increased. Also, there should be enough reserve from HVDC links to handle the system imbalance caused by the line contingency. For example, if the imported power of 1300 MW is cut down, the summation of the exported power in the HVDC transmission lines and the shed amount of load should be equal or close to 1300 MW to rebalance the system. It should be noted that in islanded operation mode, the volume of imbalance directly depends on the power flow through the tie-line. Therefore, the reserve allocated to the HVDC connecting neighbouring regions can be allocated based on the volume of power flow through the tie-line. A very important point to note is that if faster ramp rate capabilities are not available, higher volume of load shedding can be recommended. Similar conclusions are obtained for over-frequency studies as well.

VI. CONCLUSION

The studies presented in this paper aim at analyzing the frequency stability of a power system with large share of wind power under storm conditions. Two major impacts of storm in such a system can be loss of large amount of wind power and disconnection of lines to make the system vulnerable. Wind power lost due to the shutdown of WTs during the storm is a slow event and can be handled using slow manual reserves. These reserve requirements can be quite high in future with high penetration of wind power. However, if these reserves need to be obtained from neighbouring regions, enough reserve capacity in the AC tie-lines should be maintained during storm events. If the system is isolated due to the tripping of AC interconnectors, emergency support from HVDC connected neighbouring regions and load shedding are required to prevent frequency instability. The ramp rate capability of HVDC control determines the stability of the power system following a large disturbance. Higher volume of load shedding can be beneficial if the inertia of the system is low and the ramp rate capability is limited.

However, there is much more scopes for future research in this area. In order to reduce the reserve requirements during storms, WPPs can employ advanced controls like high wind ride through (HWRT) to further slow down the power reduction due to WT shut down. Probabilistic planning and evaluation of defence strategies can be developed based on multiple realisations of storm path. Techno-economic analysis on the choice of optimal mix of resources for reserves during storm event can be studied as well. The failure probability of AC interconnectors should be studied based on different storm realisations.

REFERENCES

[1] N. A. Cutululis, A. N. Hahmann, M. H. Bjerge *et al.*, (2011, May). "Assessment of storm forecast," [Online]. Available: www. twenties-project.eu
[2] V. D. Albertson and J. M. Thorson, "Power system disturbances during a K-8 geomagnetic storm: August 4, 1972," *IEEE Transactions on Power Apparatus and Systems*, vol. PAS-93, no. 4, pp. 1025-1030, Jul. 1974.
[3] D. H. Boteler, R. J. Pirjola, and H. Nevanlinna, "The effects of geomagnetic disturbances on electrical systems at the Earth's surface," *Advances in Space Research*, vol. 22, no. 1, pp. 17-27, Sept. 1998.
[4] ENTSO-E, (2015, Aug.). "Solar eclipse: the successful stress test of Europe's power grid - more ahead," [Online]. Available: https://docs.entsoe.eu/dataset/solar-eclipse-the-successful-stress-test-of-europe-s-power-grid-more-ahead
[5] National Grid, (2017, Jul.). "Solar eclipse August 2026," [Online]. Available: https://www.nationalgrideso.com/document/87826/download
[6] N. A. Cutululis, N. K. Detlefsen, and P. E. Sørensen, "Offshore wind power prediction in critical weather conditions," in *Proceedings of International Workshop on Large-scale Integration of Wind Power into Power Systems as well as on Transmission Networks for Offshore Wind Farms*, Aarhus, Denmark, Oct. 2011, pp.1-6.
[7] A. G. Endegnanew, E. V. Øyslebø, D. Huertas-Hernando *et al.*, "Coordinated control between wind and hydro power systems through HVDC links," *Energy Procedia*, vol. 24, pp. 99-107, Aug. 2012.
[8] N. K. Detlefsen, P. E. Sørensen, and P. B. Eriksen, "Managing critical weather conditions in a large-scale wind based European power system: the twenties project," in *Proceedings of IEEE PES General Meeting*, Detroit, USA, Jul. 2011, pp. 1-5.
[9] Australian Energy Market Operator, (2016, Oct.). "Update report: black system event in South Australia on 28 September 2016," [On-

line]. Available: https://apo.org.au/node/68445
[10] K. Das, M. Litong-Palima, P. Maule *et al*., "Adequacy of frequency reserves for high wind power generation," *IET Renewable Power Generation*, vol. 11, no. 8, pp. 1286-1294, Jul. 2017.
[11] K. Das, M. Altin, A. D. Hansen *et al*., "Wind power support during overfrequency emergency events," *CIGRE Science & Engineering*, vol. 9, pp. 73-83, Oct. 2017.
[12] D. S. Boeck, K. Das, V. Trovato *et al*., "Review of defence plans in Europe: current status, strengths and opportunities," *CIGRE Science & Engineering*, vol. 5, pp. 6-16, 2016.
[13] Energinet, "Energi data service," [Online]. Available: https://www.energidataservice.dk/
[14] Energinet, (2017, Feb.)."Danish minister approves interconnection between Jutland and Germany," [Online]. Available: https://electricenergyonline. com/article/energy/organisation/Energinet/31260/620229/ENERGINET-DKDanish-minister-approves-interconnection-between-Jut - land-and-Germany.html
[15] ENTSO-E, (2016, Mar.). "Frequency stability evaluation criteria for the synchronous zone of continental Europe," [Online]. Available: https://docstore. entsoe. eu/Documents/SOC%20documents/RGCE_SPD_frequency_stability_criteria_v10.pdf
[16] P. Kundur, *Power system stability and control*. New York, USA: McGraw Hill, 1994.
[17] ENTSO-E, (2017, Feb.). "Continental Europe operation handbook, P1: load-frequency control and performance," [Online]. Available: https://www.entsoe.eu/fileadmin/user_upload/_library/publications/entsoe/Operation_Handbook/Policy_1_final .pdf
[18] A. Basit, A. D. Hansen, P. E. Sørensen *et al*., "Wind power plant system services," Ph. D. dissertation, Technical University of Denmark, LyngbyRis, Denmark, 2014.
[19] A. Suwannarat, "Integration and control of wind farms in the Danish electricity system," Ph. D. dissertation, Aalborg Universitet, Aalborg, Denmark, 2008.
[20] F. P. Demello, "Dynamic-models for fossil fueled steam units in power system studies," *IEEE Transactions on Power Systems*, vol. 6, no. 2, pp. 753-761, May 1991.
[21] J. Machowski, J. Bialek, and J. Bumby, *Power system dynamics: stability and control*. New York, USA: John Wiley & Sons, 2011.
[22] CIGRE, "Modeling of gas turbines and steam turbines in combined-cycle power plants," Task Force 25 of Advisory Group 02 of Study Committee 38, Apr. 2003.
[23] F. Guo, "Security and stability of high wind penetrated power system during storm conditions," M.Sc. Thesis, Technical University of Denmark, LyngbyRis, Denmark, 2017.
[24] M. Koivisto, K. Das, F. Guo *et al*., "Using time series simulation tool for assessing the effects of variable renewable energy generation on power and energy systems," *Wiley Energy and Environment*, Oct. 2018. DOI: 10.1002/wene.329.
[25] JRC, "Demonstration project 4: management of offshore wind power in extreme high wind situations," Twenties Report, 2003.
[26] Y. Cao, W. Wang, Y. Li *et al*., "A virtual synchronous generator control strategy for VSC-MTDC systems," *IEEE Transactions on Energy Conversion*, vol. 33, no. 2, pp. 750-761, Jun. 2018.
[27] ENTSO-E, (2014, Apr.). "Technical background for the low frequency demand disconnection requirements," [Online]. Available: https://www.entsoe. eu/Documents/Network% 20codes% 20documents/NC% 20ER/141215_Technical_background_for_LFDD.pdf

Kaushik Das received the M. Tech. degree in power system engineering from the Indian Institute of Technology (IIT), Kharagpur, India, in 2011, and the Ph.D. degree from the Department of Wind Energy, Technical University of Denmark (DTU), Risø, Denmark, in 2016. Currently, he is a Researcher in DTU. He is a member of IEA Wind, IEEE, CIGRE and other professional bodies. His research interests include hybrid power plants and grid integration of renewables in power systems.

Feng Guo received the B. Eng. degree in thermal energy and power engineering form Southeast University, Nanjing, China, in 2015. He was enrolled as a joint Nordic Master in the track of system integration of wind power from 2015 to 2017, by which he obtained the M.Sc. degree in sustainable energy engineering from both Norwegian University of Science and Technology, Trondheim, Norway, and Technical University of Denmark, Risø, Denmark. Now he works at POWERCHINA, Beijing, China, as a wind resource and site engineer. His research interests include renewable energy integration, wind resource assessment, and wind farm planning and optimization.

Edgar Nuño received an Erasmus Mundus joint M.Sc. degree in power systems and sustainable transportation from the University of Oviedo, Oviedo, Spain, Nottingham University, Nottingham, UK, Sapienza University of Rome, Rome, Italy, and Polytechnic Institute of Coimbra, Coimbra, Portugal, in 2014, and the Ph.D. degree in wind energy from the Technical University of Denmark, Risø, Denmark, in 2017, respectively. His research interests include stochastic modeling of renewable energy sources, uncertainty characterization, risk-based power system reliability and wind farm electrical design.

Nicolaos A. Cutululis received the M.Sc. and Ph.D. degrees both in automatic control in 1998 and 2005, respectively. He is a Professor in the Department of Wind Energy, Technical University of Denmark, Risø, Denmark. His research interests include the integration of wind power with a special focus on offshore wind and grids.