Design of a water reuse network in an industrial site in Kenya

Ramin, Elham; Schneider, Carina; Takou, Vasiliki; Damgaard, Anders; Setti, Alessandro; Hélix-Nielsen, Claus; Flores Alsina, Xavier; Ramin, Pedram; Gernaey, Krist V.; Andersen, Maj Munch

Publication date:
2019

Document Version
Peer reviewed version

Design of a water reuse network in an industrial site in Kenya

Elham Ramin[1]; Carina Schneider[2]; Vasiliki Takou[2]; Anders Damgaard[2]: Alessandro Setti[3]; Claus Hélix-Nielsen[2]; Xavier Flores Alsina[1]; Pedram Ramin[1]; Krist V. Gernaey[1]; Maj M. Andersen[3]

[1]Technical University of Denmark, Department of Chemical and Biochemical Engineering

[2]Technical University of Denmark, Department of Environmental Engineering

[3]Technical University of Denmark, Department of Management Engineering

Sustainable growth of industries in fast developing but water-scarce countries like Kenya can only be achieved by optimizing water usage and reducing wastewater discharge. Besides internal recycling, industries can greatly reduce their freshwater intake by exchanging wastewater streams with neighboring industries and creating symbiosis relations. Previous studies have attempted to design an optimal network of water exchange streams in industrial parks by applying a global multi-objective optimization approach (e.g., [1]). However, only a few have considered the complexity of used water streams in terms of flow rate variation [2] and number of significant pollutants [3].

In this study, we present the outcome of the optimization analysis, covering the above-mentioned knowledge gaps, for water exchange between 10 companies in an industrial park in Ruaraka, Nairobi. A combination of clarification, physico-chemical, membrane-based (Inside® by Aquaporin A/S, Denmark) and disinfection treatments was considered in the optimization exercise as decentralized fit-for-purpose treatment units. Information on volumes and quality of water usage and wastewater discharge was gathered through on-site visits and interviews. The analysis forms part of a research project, Gecko (Green and Circular Innovation for Kenyan Companies), investigating circular solutions within water, materials and energy by specifically focusing on wastewater reuse and targeting industrial symbiosis potentials.

The formulation of the water reuse network is shown in the superstructure (an example for three processes) in Figure 1 using a series of multiple treatment units prior to reuse. The multi-objective evolutionary algorithm NSGA II [4] was applied, considering (i) an economic objective (i.e. capital and operational cost of treatment, piping cost and freshwater consumption volume); (ii) an environmental objective (i.e. CO_2 emission, wastewater discharge pollution load); (iii) social constraints, considered as a matrix of collaboration interests among industries (as gathered during on-site surveys). Life

Cycle Assessment (LCA) was performed on the applied water treatment processes, as well as post-optimization evaluation of multiple optimum solutions.

Preliminary optimization results show the potential of 10% economic and 20% environmental improvements in the industrial park through a water exchange network among the considered companies. More detailed analysis on the optimization objectives including fresh water saving and wastewater discharge, as well as LCA of optimum solutions will be presented later. The water network will be expanded to up to 32 companies in the same industrial park. The presented methodology can also be used to perform uncertainty and flexibility assessments of water reuse networks.

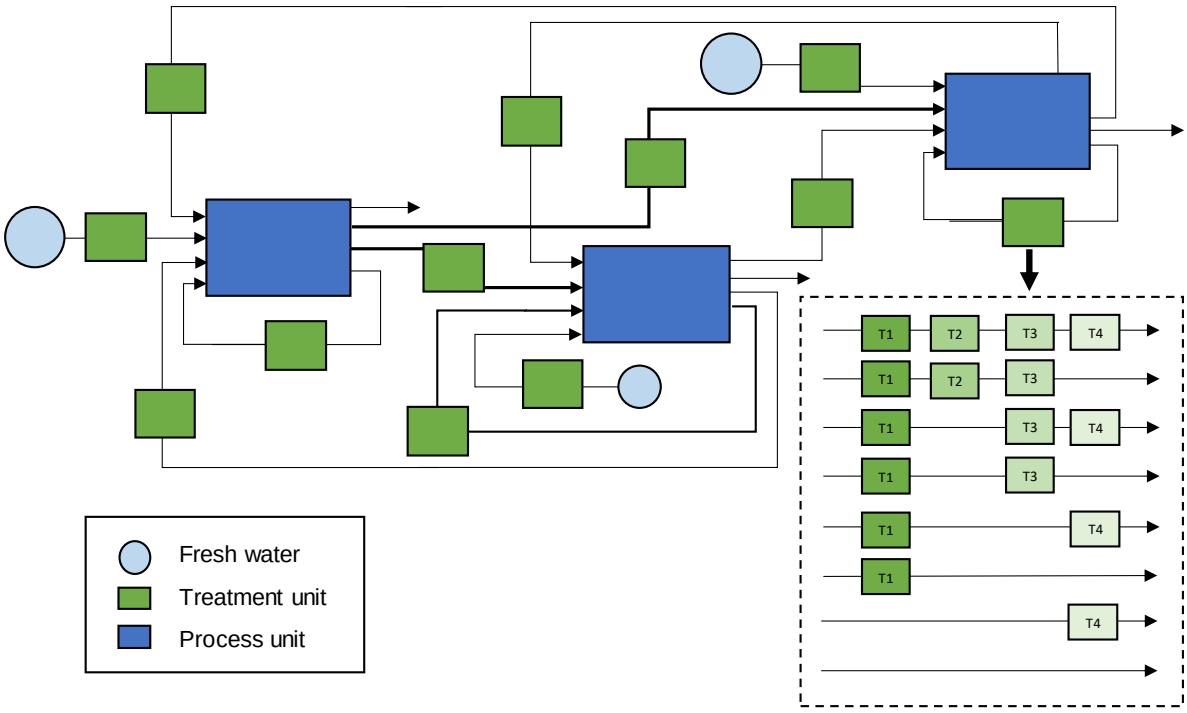

Figure 1. *Superstructure of water reuse network among multiple processes (in this case, three) including multiple treatment options. T1-4 denote different wastewater treatment steps in different configurations.*

Acknowledgments

This study is carried out within the Gecko (Green and Circular Innovation for Kenyan Companies) pilot research project funded by the Danish International Development Agency (DANIDA) for the period 2018-2020.

References

[1] Boix, M., et al. (2012), J. Clean. Prod. 22:85-97.

[2] Montastruc, L., et al. (2013). J. Clean. Prod. 43:1-11.

[3] Rubio-Castro, E., et al. (2011). Comput. Chem. Eng. 35:1558-1574.

[4] Deb, K., et al. (2002). IEEE Trans. Evolut. Comput. 6:182-197.