A Low-Complexity Probabilistic Amplitude Shaping with Short Linear Block Codes

Matsumine, Toshiki; Koike-Akino, Toshiaki; Ochiai, Hideki

Published in:
IEEE Transactions on Communications

Link to article, DOI:
10.1109/TCOMM.2021.3111032

Publication date:
2021

Document Version
Peer reviewed version

This article has been accepted for publication in a future issue of this journal, but has not been fully edited. Content may change prior to final publication. Citation information: DOI 10.1109/TCOMM.2021.3111032, IEEE Transactions on Communications

A Low-Complexity Probabilistic Amplitude Shaping with Short Linear Block Codes

Toshiki Matsumine, *Member, IEEE,* Toshiaki Koike-Akino, *Senior Member, IEEE,* and Hideki Ochiai, *Senior Member, IEEE*

***Abstract*—We propose a new probabilistic amplitude shaping (PAS) scheme based on short linear block codes. In the proposed system, the capacity-approaching signal distribution is generated in the process of decoding linear block codes for a given information bit sequence. We associate the design problem of shaping codes with the classical covering problem, suggesting the use of good covering codes for shaping. From simulation results, it is demonstrated that by selecting *perfect* binary codes as our shaping codes, the proposed scheme offers a shaping gain of around 0.3–1.0 dB. By comparing with the enumerative sphere shaping (ESS) of the same block length, we verify that the proposed scheme achieves significantly lower storage complexity and computational complexity at the receiver even with comparable block error rate performance.**

***Index Terms*—Probabilistic amplitude shaping, linear block codes, binary perfect codes.**

I. Introduction

The recent development of capacity-approaching codes enables us to practically approach the achievable information rate (AIR) of standard equispaced and equiprobable quadrature amplitude modulation (QAM) signaling with large block lengths. However, it is well-known that the AIR of standard QAM signaling itself has a penalty up to 1.53 dB from the Shannon limit as a target spectral efficiency increases [1]. Constellation shaping is a technique to compensate for this performance loss by manipulating a signal distribution and thus plays an important role in the next-generation communications systems that require higher data rates without bandwidth expansion.

Various approaches for constellation shaping have been extensively studied in the literature [1–14], which are largely classified into the following two types: probabilistic shaping (PS) and geometric shaping (GS). PS generates equispaced constellation points with non-uniform probabilities, whereas GS uses non-equispaced constellation points with uniform probabilities. This paper studies PS that introduces an additional shaping operation that generates desired distribution from a given source [15, 16]. A variety of implementations for PS have been proposed in the literature, and some of them make use of arithmetic coding [17], decoding algorithm of channel codes [18–20], small size look-up tables [21], short block codes [22, 23], variable-length prefix-free codes [24, 25], and punctured codes [26, 27].

Recently, a probabilistic amplitude shaping (PAS) architecture [14] with constant composition distribution matcher (CCDM) [17] as fixed-to-fixed length distribution matching has gained much attention, as CCDM is shown to be asymptotically optimal in the sense that the normalized divergence of its output and the desired distribution vanishes as block length increases. On the other hand, the major challenge in practice may lie in its sequential nature resulting from an arithmetic coding for distribution matching that makes its parallel implementation difficult. Another issue associated with CCDM may be the performance degradation due to the rate loss when the block length is short. In order to tackle these issues, the shaping approaches aiming at relatively short block length have been studied in [28–34]. In particular, the shaping approaches that generate spherical constellation points have been studied for very short shaping code lengths [30, 31, 33]. Although the spherical signal constellation achieves an excellent power gain, computational complexity required for generating such signals, as well as its inverse operation, may be significant even with moderate order of dimension.

In this paper, we propose a new PS approach based on short binary linear block codes that enables efficient implementation. We address now to design the shaping codes in the proposed system and reveal the suitability of good covering codes for shaping. Significant shaping gains achieved by the proposed scheme are demonstrated using perfect binary codes as our shaping codes. In what follows, we review some related works in order to elucidate our contribution.

A. Related Work: Multi-Dimensional Modulation Based on Lattices

It would be natural to consider good sphere packing lattices in the Euclidean space as a modulation format since they have power-efficient geometry [35, 36]. In particular, remarkably dense lattices are known for certain low dimensions that approach the theoretically achievable shaping gain, i.e., *sphere-packing bound*. For instance, 8-dimensional Gosset lattices, 16-dimensional Barnes–Wall lattices, and 24-dimensional Leech lattices achieve shaping gains of 0.65 dB, 0.86 dB, and 1.03 dB, respectively, which are extremely close to the sphere-packing bounds [35]. It is also known that these lattices are closely related to well-known binary linear block codes such as Hamming codes, Reed–Muller codes, and Golay

T. Matsumine is with the Department of Photonics Engineering, Technical University of Denmark, Kongens Lyngby, Denmark, email: tosma@fotonik.dtu.dk

T. Koike-Akino is with the Mitsubishi Electric Research Laboratories, Cambridge, MA, USA, email: koike@merl.com

H. Ochiai is with the Department of Electrical and Computer Engineering, Yokohama National University, Yokohama, Japan. email: hideki@ynu.ac.jp

This work was supported in part by the Japan Society for the Promotion of Science (JSPS) through the Grants-in-Aid for Scientific Research (KAKENHI) under Grant 21H04873.

This article has been accepted for publication in a future issue of this journal, but has not been fully edited. Content may change prior to final publication. Citation information: DOI 10.1109/TCOMM.2021.3111032, IEEE Transactions on Communications

codes, and thus can be efficiently constructed based on these block codes [35].

In [37–39], high-dimensional modulation based on a dense lattice has been studied. Although it has been demonstrated that these lattices offer excellent shaping gains even for a short symbol length with efficient implementation [40], the major challenge may lie in an integration with practical coded modulation systems. More specifically, for practical systems employing binary soft-decision forward error correction (FEC) codes, generalized mutual information (GMI), i.e., the AIR for bit-metric decoding (BMD), is the important performance metric to be maximized [41]. However, for high-dimensional modulation, due to the excessively large number of possible mapping patterns, it is cumbersome to optimize the bit-labeling for maximizing the AIR for BMD. Therefore, only uncoded error rate performance and performance with hard-decision FEC codes have been evaluated in [37–39]. In fact, it has been shown that a lattice-based high-dimensional modulation achieves an excellent AIR for symbol-metric decoding (SMD), but it is not necessarily suited for BMD due to the lack of Gray labeling [42]. To avoid a symbol-to-bit conversion and exploit SMD, lattice-based shaping was combined with non-binary turbo trellis coded modulation (TTCM) in [33].

B. Related Work: Code-based Shaping

Code-based shaping attempts to control transmit signals based on soft-decision decoding of shaping codes at the transmitter side. Our idea of using a code for shaping is related to *trellis shaping* that employs convolutional codes for PS [18]. However, the major difference is that our primary focus is on an integration with the recently proposed PAS structure which has a high flexibility to accommodate different sets of FEC codes and modulation formats. On the other hand, the application of trellis shaping has been mainly studied for multi-level coded modulation (MLC) or trellis coded modulation (TCM) [43]. In [19], a similar code-based shaping using polar coding structure has been recently proposed, but it is only applicable to systems operating with polar codes.

C. Our Contribution

In this work, we show the relationship between the shaping code design and classical covering problem, and propose to use good covering codes as our shaping codes. We demonstrate that, for 256QAM, the proposed code-based shaping can achieve similar performance to the enumerative sphere shaping (ESS) of the same block length. We also compare their storage and computational complexities, where significantly lower storage requirement and computational complexity at the receiver side of the proposed scheme are shown, while transmitter complexity could be higher than that of the ESS due to the shaping operation based on soft-decision decoding of shaping codes. This would make the proposed scheme suitable for applications where computational capabilities at the transmitter and the receiver sides are asymmetrical, such as downlink communication from base station to user terminals in mobile networks.

The main contributions of this paper are summarized as follows:

- We introduce a novel PAS approach where the capacity-approaching signal distribution is generated by decoding of linear block codes;
- We describe the relationship between shaping code design in the proposed system and the classical covering problem, which motivates us to use good covering codes for shaping;
- We show that the proposed code-based shaping can significantly reduce storage and receiver computational complexity over the conventional ESS with similar performance.

The rest of this paper is organized as follows: Section II introduces the proposed PAS system with code-based shaping, and describe the shaping implementation based on decoding algorithm of short linear block codes. Section III discusses the design issue of shaping codes in the proposed system. Section IV provides complexity comparison of the proposed scheme and the ESS in terms of storage and computational complexities. In Section V, we compare performance-complexity trade-offs of the proposed system and the ESS, where the remarkable complexity advantage of the proposed shaping in terms of storage and receiver complexities is demonstrated for 256QAM with similar performance. Finally, Section VI gives concluding remarks.

II. Probabilistic Shaping with Linear Block Codes

In this section, we introduce the proposed code-based shaping and also describe the shaping operation based on soft-decision decoding of a shaping code.

A. Proposed PAS System

We follow the PAS structure [14] employing one-dimensional M-ary ($M = 2^m$) pulse-amplitude modulation (PAM) with binary reflected Gray code (BRGC) [44]. Letting $\mathcal{X} = \{\pm 1, \pm 3, \ldots, \pm(M-1)\}$ denote a set of PAM signal points (power normalization is taken place before transmission), a PAM symbol $X \in \mathcal{X}$ with a BRGC labeling can be decomposed as

$$X = A \cdot S, \tag{1}$$

where $A \in \mathcal{A}_M$, with $\mathcal{A}_M \triangleq \{1, 3, \ldots, (M-1)\}$ representing a set of amplitude symbols with its cardinality $|\mathcal{A}_M| = M/2$, and $S \in \{-1, 1\}$ is a sign corresponding to the most-significant bit (MSB). In PAS, we first generate the amplitudes of PAM symbols by a distribution matcher (DM), and then, the subsequent systematic FEC encoder generates the signs of transmitted PAM symbols based on the amplitudes. In this paper, we propose a new implementation of DM based on short linear block codes for the PAS system [14]. In what follows, we describe how the amplitudes of transmitted PAM symbols are generated based on short linear block codes. Note that the extension to two-dimensional M^2-ary QAM is straightforward by assigning two independent PAM symbols to real and imaginary components, respectively. In addition, our method is applicable to the case with non-equi-spaced PAM.

This article has been accepted for publication in a future issue of this journal, but has not been fully edited. Content may change prior to final publication. Citation information: DOI 10.1109/TCOMM.2021.3111032, IEEE Transactions on Communications

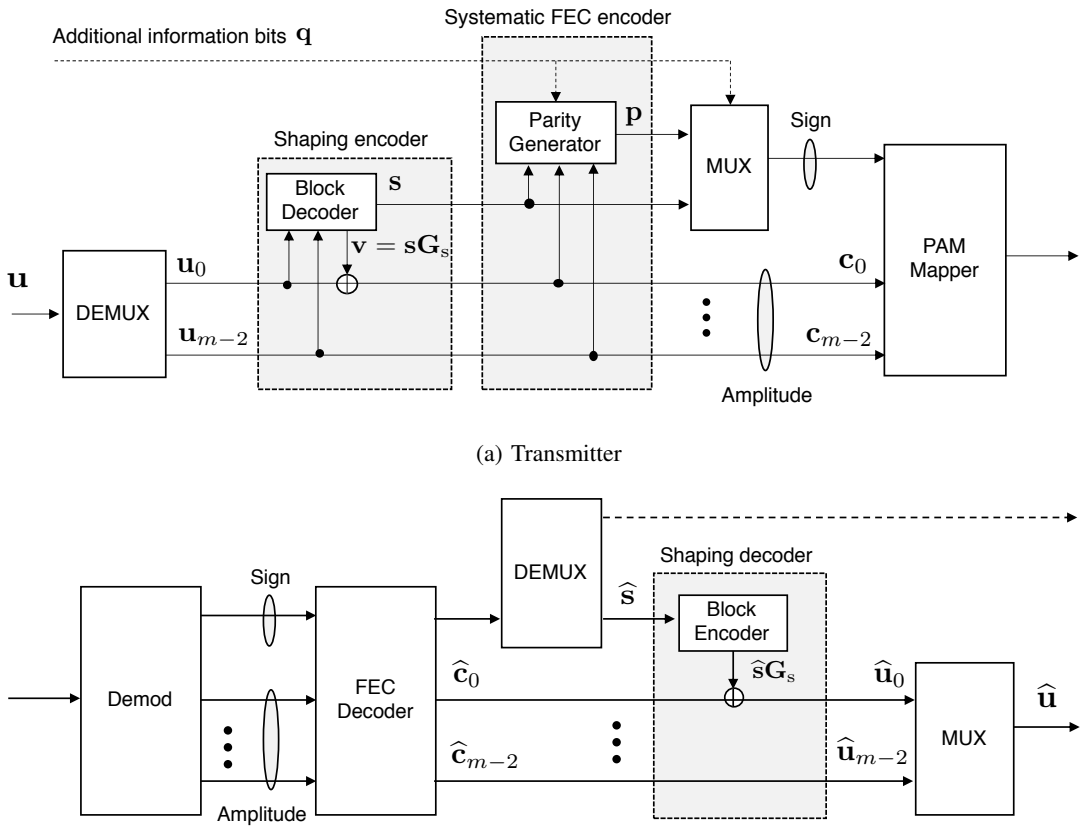

(a) Transmitter

(b) Receiver

Fig. 1: Block diagram of the proposed code-based shaping system for 2^m-ary PAM.

1) Transmitter: Fig. 1a shows the transmitter of the proposed system with PAS, where a DM is realized by code-based shaping. Letting N_symbol denote modulation symbol length (i.e., block length), we split a binary information sequence $\mathbf{u} \in \mathbb{F}_2^{(m-1)N_\text{symbol}}$ into $m-1$ streams, denoted as $(\mathbf{u}_0, \ldots, \mathbf{u}_{m-2})$ with $\mathbf{u}_i \in \mathbb{F}_2^N$, $i \in \{0, \ldots, m-2\}$. These binary sequences are converted to amplitude symbol sequences by shaping operation.

Let $\mathbf{G}_\mathrm{s} \in \mathbb{F}_2^{K \times N}$ denote a generator matrix of a binary block code (N, K) used for shaping with its information and codeword lengths given by K and N, respectively. A code rate of a shaping code is then defined as $R_\mathrm{s} = K/N$. We attempt to control distribution of amplitude symbols by superposing a shaping codeword $\mathbf{v} = \mathbf{s}\mathbf{G}_\mathrm{s} \in \mathbb{F}_2^N$ onto the bit level of amplitude symbols that has the highest impact on a signal power, i.e., $\mathbf{u}_0$, where $\mathbf{s} \in \mathbb{F}_2^K$ is a shaping bit sequence[1]. Letting $\mathbf{c} = (\mathbf{c}_0, \ldots, \mathbf{c}_{m-2})$ with $\mathbf{c}_i \in \mathbb{F}_2^N, i \in \{0, \ldots, m-2\}$, denote bit-plane sequences after shaping operation, the 0th bit-plane sequence $\mathbf{c}_0$ is expressed as $\mathbf{c}_0 = \mathbf{u}_0 \oplus \mathbf{v}$ (where $\oplus$ denotes element-wise modulo-2 addition), whereas the remaining bit-planes are left unchanged, i.e., $\mathbf{c}_i = \mathbf{u}_i$ for $i \in \{1, \ldots, m-2\}$. Let $f_M : \mathbb{F}_2^{(m-1)} \to \mathcal{A}_M$ denote a mapping function of $(m-1)$ bits onto an amplitude symbol for an amplitude set $\mathcal{A}_M = \{1, 3, \ldots, (M-1)\}$. Similarly, let $f_M^N : \mathbb{F}_2^{(m-1) \times N} \to \mathcal{A}_M^N$ denote an element-wise mapping from modulator input bits onto an amplitude symbol vector of length N. Then the resulting amplitude symbol vector is expressed as

$$\mathbf{a} = f_M^N(\mathbf{c}) \in \mathcal{A}_M^N. \tag{2}$$

The shaping operation is to choose an appropriate shaping bit sequence $\mathbf{s}$ that controls the amplitudes of transmit symbols through the 0th bit-plane sequence $\mathbf{c}_0$. The metric for choosing a shaping bit sequence $\mathbf{s}$ may depend on a specific purpose of shaping, e.g., reducing peak-to-average power ratio. In our case, the objective of shaping is to minimize an average signal power for a fixed rate. Therefore, the shaping operation is to find the best shaping bit sequence $\mathbf{s}^\star$ that satisfies the following:

$$\mathbf{s}^\star = \underset{\mathbf{s} \in \mathbb{F}_2^K}{\arg\min} \left\{ \|\mathbf{a}\|^2 \right\}, \tag{3}$$

where $\|\cdot\|$ is the Euclidean norm. Since a shaping codeword $\mathbf{v}$ is superposed on a random information bit sequence $\mathbf{u}_0$, we need to be able to recover the original information $\mathbf{u}_0$ from the superposed sequence $\mathbf{c}_0 = \mathbf{u}_0 \oplus \mathbf{v}$. For this purpose, we transmit a shaping bit sequence $\mathbf{s}$ as the MSB (i.e., sign bit of PAM) which does not affect the average power of PAM signal

[1]This approach is similar to *sign bit shaping* in [18].

This article has been accepted for publication in a future issue of this journal, but has not been fully edited. Content may change prior to final publication. Citation information: DOI 10.1109/TCOMM.2021.3111032, IEEE Transactions on Communications

with BRGC[2].

2) Systematic FEC Operation: We assume that a shaping code is shorter than the FEC block length. Let $\tau = \lceil N_{\text{symbol}}/N \rceil$ denote the number of shaping code blocks per transmit symbol length, where $\lceil \cdot \rceil$ denotes the ceiling function[3]. Then, the shaping bit sequence corresponding to τ shaping encoders is denoted as $\mathbf{s} = (\mathbf{s}_1, \ldots, \mathbf{s}_\tau) \in \mathbb{F}_2^{\tau K}$. Similar to the conventional PAS [14], we may also introduce additional information bits of length γN_{symbol}, denoted by $\mathbf{q} \in \mathbb{F}_2^{\gamma N_{\text{symbol}}}$, for enhancing a spectral efficiency, as indicated by the dash line in Fig.1a. The FEC input bit sequence is then expressed as $\mathbf{d} = [\mathbf{q}\ \mathbf{s}\ \mathbf{c}_0 \ldots \mathbf{c}_{m-2}] \in \mathbb{F}_2^{K_\text{c}}$, where $K_\text{c} = \gamma N_{\text{symbol}} + (m-1)N_{\text{symbol}} + \tau K$ is the FEC input bit length. Let $\mathbf{G}_\text{c} \in \mathbb{F}_2^{K_\text{c} \times N_\text{c}}$ denote a generator matrix of a binary FEC code of dimension K_c and length $N_\text{c} = mN_{\text{symbol}}$, i.e., the code rate is

$$R_\text{c} = \frac{K_\text{c}}{N_\text{c}} = \frac{\gamma N_{\text{symbol}} + (m-1)N_{\text{symbol}} + \tau K}{mN_{\text{symbol}}} = \frac{\gamma + (m-1) + R_\text{s}}{m}. \tag{4}$$

Assuming a systematic FEC code, a generator matrix is expressed as $\mathbf{G}_\text{c} = [\mathbf{I}\ \mathbf{P}]$ where $\mathbf{I}$ is the identity matrix of size K_c and $\mathbf{P}$ is the K_c-by-$(N_\text{c} - K_\text{c})$ parity matrix. Then FEC encoding is performed as

$$\mathbf{d}\mathbf{G}_\text{c} = [\mathbf{d}\ \mathbf{p}], \tag{5}$$

where $\mathbf{p} = \mathbf{d}\mathbf{P} \in \mathbb{F}_2^\ell$ is a parity bit sequence of length $\ell = N_\text{c} - K_\text{c}$. The total number of shaping and parity bits should be equal to the modulation symbol length, i.e., $\gamma N_{\text{symbol}} + \tau K + \ell = N_{\text{symbol}}$. In this case, the overall information rate of the proposed system, denoted by R, is given by

$$R = (m-1) + \gamma \text{ [bits/dimension]}, \tag{6}$$

since neither of shaping bits $\mathbf{s}$ and FEC parity bits $\mathbf{p}$ convey additional information.

Comparison with the Conventional PAS Structure [14]: Letting γ_{prop} and γ_{conv} denote the additional rates for the proposed and the conventional systems, their spectral efficiencies are expressed as $(m-1) + \gamma_{\text{prop}}$ and $R_{\text{DM}} + \gamma_{\text{conv}}$, respectively, where $R_{\text{DM}} \leq (m-1)$ is the number of information bits per amplitude symbol, referred to as a DM rate in the conventional PAS. When the two systems are compared with the same spectral efficiency, the additional rate of the proposed scheme should be lower than that of the conventional scheme, i.e., $\gamma_{\text{prop}} \leq \gamma_{\text{conv}}$, since $(m-1) \geq R_{\text{DM}}$.

3) Receiver: The receiver structure of the proposed system is depicted in Fig. 1b. At the receiver side, we employ decoding of the systematic FEC code based on bit-wise log likelihood ratio (LLR) outputs of demodulator. Then we estimate the shaping bits chosen at the transmitter side as $\widehat{\mathbf{s}}$. An inverse shaping operation is performed by superposing the estimated shaping codeword $\widehat{\mathbf{v}} = \widehat{\mathbf{s}}\mathbf{G}_\text{s}$. The decoded information bits are merged into a single bit sequence $\widehat{\mathbf{u}}$.

We note that the inverse shaping operation increases bit error rate (BER) if an estimated shaping bit sequence $\widehat{\mathbf{s}}$ is erroneous. However, such an event is unlikely since shaping bits $\mathbf{s}$ are allocated to the MSB with BRGC. We also note that the inverse shaping may not affect the resulting block error rate (BLER).

Remark: Our proposed shaping may be also related to the low-complexity shaping proposed in [45] that generates two possible candidates for transmiting signal sequences with two opposite properties in terms of signal powers, and then chooses the one with lower signal power. This may be seen as a special case of the proposed shaping when repetition codes are used for shaping that can flip the 0th bit-plane sequence $\mathbf{c}_0$.

B. Shaping Operation

The shaping operation in the proposed system is to find the best shaping codeword that minimizes the average signal power, i.e., (3). This can be performed by soft-decision decoding of a shaping code where the average signal power is used as a decoding metric.

Recall that $\mathbf{u}_i = (c_{i,0}, \ldots, c_{i,N-1}) \in \mathbb{F}_2^N$ with $i \in \{0, \ldots, m-2\}$ is the ith bit-plane sequence at the modulator input. Let

$$\check{\mathbf{U}}_0 = \begin{bmatrix} \mathbf{u}_1 \\ \mathbf{u}_2 \\ \vdots \\ \mathbf{u}_{m-2} \end{bmatrix} = \begin{bmatrix} u_{1,0} & \cdots & u_{1,N-1} \\ u_{2,0} & \cdots & u_{2,N-1} \\ \vdots & \vdots & \vdots \\ u_{m-2,0} & \cdots & u_{m-2,N-1} \end{bmatrix} \tag{7}$$

denote a matrix that forms the amplitudes of PAM symbols except the 0th bit-plane sequence $\mathbf{u}_0$ which will be controlled by the shaping encoder. Let $\check{\mathbf{u}}_{0,j} = (u_{1,j}, \ldots, u_{m-2,j})^\intercal \in \mathbb{F}_2^{(m-2)\times 1}$ denote the jth column of the matrix $\check{\mathbf{U}}_0$ for $j \in \{0, 1, \ldots, N-1\}$, where $[\cdot]^\intercal$ is the transpose, such that we can write $\check{\mathbf{U}}_0 = (\check{\mathbf{u}}_{0,0}, \ldots, \check{\mathbf{u}}_{0,N-1})$. Then let $C(\check{\mathbf{U}}_0) = (C(\check{\mathbf{u}}_{0,0}), \ldots, C(\check{\mathbf{u}}_{0,N-1})) \in \mathbb{R}^N$ denote a real-valued sequence, whose jth element

$$C(\check{\mathbf{u}}_{0,j}) \triangleq |f_M(u_{0,j} = 1, \check{\mathbf{u}}_{0,j})|^2 - |f_M(u_{0,j} = 0, \check{\mathbf{u}}_{0,j})|^2 \tag{8}$$

represents the expected power saving achieved by alternating the modulator input bit at the 0th bit-plane $u_{0,j}$ corresponding to the jth modulation symbol. Note that the gain $C(\check{\mathbf{U}}_0)$ can be computed for a given mapping function f_M and information bits $\check{\mathbf{U}}_0$ independently of the bit sequence $\mathbf{u}_0$ that we attempt to control by shaping. We also note that the proposed shaping controls only the 0th bit-plane sequence as $\mathbf{c}_0 = \mathbf{u}_0 \oplus \mathbf{v}$, and does not affect $\check{\mathbf{U}}_0$. Then the minimization of the average power is equivalent to maximizing the correlation between a shaping codeword $\mathbf{v} = \mathbf{s}\mathbf{G}_\text{s}$ and the corresponding expected power savings $C(\check{\mathbf{U}}_0)$, i.e.,

$$\max_{\mathbf{s} \in \mathbb{F}_2^K} \{C(\check{\mathbf{U}}_0) \cdot (\mathbf{1} - 2\mathbf{c}_0)\}, \tag{9}$$

where $\cdot$ denotes the dot product of two vectors, and $\mathbf{1}$ is an all-ones vector of appropriate size. Since $\mathbf{c}_0 = \mathbf{u}_0 + \mathbf{v}$ and

[2]In trellis shaping, additional convolutional encoder is employed at the transmitter in order to retrieve the original information bits at the receiver side which increases complexity.

[3]When a block length N_{symbol} is not dividable by a shaping code length N, we puncture the last $(\tau N - N_{\text{symbol}})$ bits of one shaping code to match the lengths. However, error rate performance will be degraded in this case since punctured shaping code is not necessarily good for shaping. This effect becomes more noticeable as FEC block length decreases.

This article has been accepted for publication in a future issue of this journal, but has not been fully edited. Content may change prior to final publication. Citation information: DOI 10.1109/TCOMM.2021.3111032, IEEE Transactions on Communications

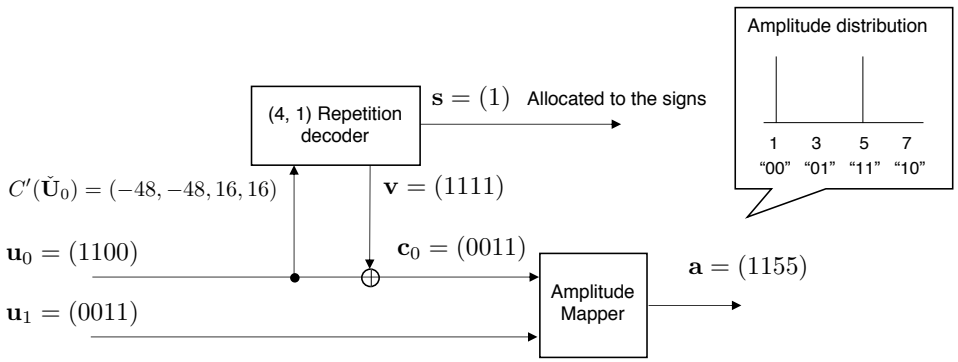

Fig. 2: Example of the proposed code-based shaping with $(4, 1)$ repetition codes for 8PAM.

$(\mathbf{1}-2\mathbf{c}_0) = (\mathbf{1}-2\mathbf{u}_0)\circ(\mathbf{1}-2\mathbf{v})$ where $\circ$ denotes dot product, we can rewrite (9) as follows:

$$\max_{\mathbf{s}\in\mathbb{F}_2^K}\{\underbrace{(\mathbf{1}-2\mathbf{u}_0)\circ C(\check{\mathbf{U}}_0)}_{\triangleq C'(\check{\mathbf{U}}_0)}\cdot(\mathbf{1}-2\mathbf{v})\}. \tag{10}$$

The objective of our shaping (10) is similar to that of ML decoding of channel codes that finds the maximum correlation between an estimated codeword and a decoder input LLR sequence. Therefore, we may use off-the-shelf soft-decision decoders of linear block codes for solving (10) where $C'(\check{\mathbf{U}}_0)$ is used as a decoder input sequence. With regard to a bit-labeling scheme, the MSB does not affect the amplitude, similar to the original PAS. On the other hand, the proposed shaping can reduce a symbol power for the amplitude with any bit-labeling scheme in principle through the selection of $\mathbf{c}_0$, while the gain in (8) depends on a specific bit-labeling scheme. Nevertheless, we assume a BRGC labeling in this paper, since we consider a binary FEC with bit-metric decoding. Also, the proposed system may be extended to non-uniform constellation points, i.e., a hybrid probabilistic and geometric shaping scheme [46, 47], as long as a modulation symbol is expressed as the product of amplitude and sign. However, in this paper, we exclusively focus on probabilistic shaping since its performance is already close to the Shannon limit, and thus additional gain achieved by the hybrid scheme is expected to be small.

Example: In order to demonstrate how the proposed shaping works, we show a simple example with 8PAM in Fig. 2, where the $(4, 1)$ repetition code with its generator matrix $\mathbf{G}_\mathrm{s} = [1111]$ is used as a shaping code. Depending on an information sequence $\mathbf{u}_0$, the shaping codeword, i.e., either $\mathbf{v} = (0, 0, 0, 0)$ or $(1, 1, 1, 1)$ in this example, may be chosen based on (10), which is equivalent to (3). More specifically, in this example, a decoder input sequence is computed as $C'(\check{\mathbf{U}}_0) = (-48, -48, 16, 16)$ from $C(\check{\mathbf{U}}_{0,j}) = 7^2 - 1^2 = 48$ for $j \in \{0, 1\}$, $C(\check{\mathbf{U}}_{0,j}) = 5^2 - 3^2 = 16$ for $j \in \{2, 3\}$, and $(\mathbf{1} - 2\mathbf{u}_0) = (-1, -1, 1, 1)$. Therefore, the shaping codeword $\mathbf{v} = \mathbf{s}\mathbf{G}_\mathrm{s} = (1, 1, 1, 1)$ should be chosen in order to maximize the correlation $C'(\check{\mathbf{U}}_0) \cdot (\mathbf{1} - 2\mathbf{v})$, resulting in the amplitude symbol sequence $\mathbf{a} = (1, 1, 5, 5)$. The corresponding shaping bit $\mathbf{s} = (1)$ is transmitted as the signs of PAM symbols together with parity bits of an FEC code for recovering the original information bits $\mathbf{u}_0$ at the receiver side. The squared Euclidean norm of the amplitude symbol vector is then reduced to 52 with shaping, while without shaping, it would be 116 (about 3.48 dB gap). Note that the amount of power reduction, i.e., $116 - 52 = 64$ in this case, corresponds to the dot product of $C'(\check{\mathbf{U}}_0) = (-48, -48, 16, 16)$ and $(\mathbf{1} - 2\mathbf{v}) = (-1, -1, -1, -1)$, which we wish to maximize in (10).

This example also illustrates why soft-decision decoding is desired in the proposed shaping. The metric $C'(\check{\mathbf{U}}_{0,j})$ for $j \in \{0, \ldots, N-1\}$ indicates the power reduction capability for a given bit index j, which varies even in a single bit level depending on the other bit levels. The differences in the metrics are taken into account in the shaping operation based on soft-decision decoding of shaping codes, i.e., the bit having a higher impact on the symbol power is more likely to be shaped (flipped). In this way, the use of soft-decision decoding of shaping codes enables us to generate Gaussian-like distribution. On the other hand, if a hard-decision decoder is employed for shaping, the metric is quantized to two levels, and thus the input to the shaping code decoder would become $(1, 1, 0, 0)$. In this case, a shaping code decoder fails to choose the codeword that reduces the signal power, i.e., $\mathbf{v} = (1, 1, 1, 1)$.

III. Design of Shaping Codes

In this section, we discuss how to design good shaping codes. We demonstrate that the shaping code design in our system is closely related to the classical covering problem, indicating the potential ability of good covering codes to achieve excellent shaping gain.

A. Proposed Design Guideline

The proposed shaping code should be designed such that one can minimize a signal power associated with (2) averaged over all possible information sequence $\mathbf{u}$. Assuming that $\mathbf{u}$ is a uniformly random binary vector, the objective of shaping code design is to minimize the following metric:

$$\mathbb{E}_\mathbf{u}\left\{\min_\mathbf{s}\left\{\|f_M^N(\mathbf{c}|\mathbf{u})\|^2\right\}\right\}, \tag{11}$$

where $\mathbb{E}_\mathbf{u}$ is the expectation operation over the random vector $\mathbf{u}$, and $f_M^N(\mathbf{c}|\mathbf{u})$ is an amplitude symbol sequence conditioned on a random information bit sequence $\mathbf{u}$.

This article has been accepted for publication in a future issue of this journal, but has not been fully edited. Content may change prior to final publication. Citation information: DOI 10.1109/TCOMM.2021.3111032, IEEE Transactions on Communications

Recall the 0th modulator input $\mathbf{c}_0 = \mathbf{u}_0 \oplus \mathbf{v} = (c_{0,0}, \ldots, c_{0,N-1}) \in \mathbb{F}_2^N$ and let $\mathbf{c}_0^{\text{opt}} = (c_{0,0}^{\text{opt}}, \ldots, c_{0,N-1}^{\text{opt}}) \in \mathbb{F}_2^N$ denote the optimal 0th modulator input sequence that minimizes a signal power. We define the shaping gain of the proposed system as a function of the Hamming distance between $\mathbf{c}_0$ and $\mathbf{c}_0^{\text{opt}}$ conditioned on $\mathbf{u}$, i.e., Hamming weight of $\mathbf{c}_0 \oplus \mathbf{c}_0^{\text{opt}}$, as

$$W(\mathbf{c}_0 \oplus \mathbf{c}_0^{\text{opt}}|\mathbf{u}) = \sum_{j=0}^{N-1} |C(\check{\mathbf{u}}_{0,j})| \left(1 - 2w_{\text{H}}(c_{0,j} \oplus c_{0,j}^{\text{opt}}|u_{0,j})\right), \tag{12}$$

where $w_{\text{H}}(c_{0,j} \oplus c_{0,j}^{\text{opt}}|u_{0,j}) \in \{0,1\}$ is the Hamming weight of $c_{0,j} \oplus c_{0,j}^{\text{opt}}$ for a given $u_{0,j}$. Note that if the actual and optimal modulator input bits agree, i.e., $w_{\text{H}}(c_{0,j} \oplus c_{0,j}^{\text{opt}}|u_{0,j}) = 0$, we may achieve the power gain of $|C(\check{\mathbf{u}}_{0,j})|$, and lose the same amount of gain otherwise, i.e., $w_{\text{H}}(c_{0,j} \oplus c_{0,j}^{\text{opt}}|u_{0,j}) = 1$. Since $C(\check{\mathbf{u}}_{0,j})$ depends only on i.i.d. information bits, $C(\check{\mathbf{u}}_{0,j})$ may be also modeled as an i.i.d. random variable.

The optimal shaping code design for the proposed system is to maximize the shaping gain (12), which is equivalent to the minimization of the following:

$$W'(\mathbf{c}_0 \oplus \mathbf{c}_0^{\text{opt}}|\mathbf{u}) = \sum_{j=0}^{N-1} |C(\check{\mathbf{u}}_{0,j})| w_{\text{H}}(c_{0,j} \oplus c_{0,j}^{\text{opt}}|u_{0,j}). \tag{13}$$

Consequently, the objective of the proposed shaping is expressed as the following minimization problem:

$$\mathbb{E}_{\mathbf{u}} \left\{ \min_{\mathbf{s}} \left\{ W'(\mathbf{c}_0 \oplus \mathbf{c}_0^{\text{opt}}|\mathbf{u}) \right\} \right\}. \tag{14}$$

While the identification of the shaping code that directly minimizes (14) is difficult, we may deal with the tractable upper bound of (14) from the following theorem.

Theorem.

$$\begin{aligned} &\mathbb{E}_{\mathbf{u}} \left\{ \min_{\mathbf{s}} \left\{ W'(\mathbf{c}_0 \oplus \mathbf{c}_0^{\text{opt}}|\mathbf{u}) \right\} \right\} \\ &\quad \leq \mathbb{E}_{\mathbf{u}_0} \left\{ \min_{\mathbf{s}} \left\{ C' \, w_{\text{H}}(\mathbf{c}_0 \oplus \mathbf{c}_0^{\text{opt}}|\mathbf{u}_0) \right\} \right\}, \end{aligned} \tag{15}$$

where $C' = \mathbb{E}_{\check{\mathbf{u}}_{0,j}} \{|C(\check{\mathbf{u}}_{0,j})|\}$.

Proof. By assumption, since $W(\mathbf{c}_i \oplus \mathbf{c}_i^{\text{opt}}|\mathbf{c}_{i+1}, \ldots, \mathbf{c}_m)$ is a random variable, we have the following relationship from Jensen's inequality based on the fact that min function is concave:

$$\begin{aligned} &\mathbb{E}_{\mathbf{u}} \left\{ \min_{\mathbf{s}} \left\{ W'(\mathbf{c}_0 \oplus \mathbf{c}_0^{\text{opt}}|\mathbf{u}) \right\} \right\} \\ &\quad = \mathbb{E}_{\mathbf{u}_0} \left\{ \mathbb{E}_{\check{\mathbf{u}}_0} \left\{ \min_{\mathbf{s}} \left\{ W'(\mathbf{c}_0 \oplus \mathbf{c}_0^{\text{opt}}|\mathbf{u}) \right\} \right\} \right\} \qquad (16) \\ &\quad \leq \mathbb{E}_{\mathbf{u}_0} \left\{ \min_{\mathbf{s}} \left\{ \mathbb{E}_{\check{\mathbf{u}}_0} \left\{ W'(\mathbf{c}_0 \oplus \mathbf{c}_0^{\text{opt}}|\mathbf{u}) \right\} \right\} \right\} \qquad (17) \\ &\quad = \mathbb{E}_{\mathbf{u}_0} \left\{ \min_{\mathbf{s}} \left\{ C' \, w_{\text{H}}(\mathbf{c}_0 \oplus \mathbf{c}_0^{\text{opt}}|\mathbf{u}_0) \right\} \right\}, \qquad (18) \end{aligned}$$

where $C' = \mathbb{E}_{\check{\mathbf{u}}_{0,j}} \{|C(\check{\mathbf{u}}_{0,j})|\}$. □

Based on the above Theorem, we propose to design a shaping code such that the Hamming weight $w_{\text{H}}(\mathbf{c}_0 \oplus \mathbf{c}_0^{\text{opt}}|\mathbf{u}_0)$ is minimized, which is equivalent to minimizing the upper bound of the average signal power. We would like to emphasize that since the objective of shaping code design is to maximize the *average* performance, we take an average over bit-plane levels other than the target bit-plane level $\check{\mathbf{u}}_{0,j}$ in (15). However, in an actual shaping operation, $\mathbf{s}$ should be chosen based on an actual signal power for given $\check{\mathbf{u}}_{0,j}$.

We may denote the *average* minimum Hamming distance for the bit-plane level 0 in (15) ignoring a constant C' as

$$\begin{aligned} d_{\text{av}} &= \mathbb{E}_{\mathbf{u}_0} \left\{ \min_{\mathbf{s}} w_{\text{H}}(\mathbf{u}_0 \oplus \mathbf{c}_0^{\text{opt}} \oplus \mathbf{s}\mathbf{G}_{\text{s}}|\mathbf{u}_0) \right\} \\ &= \mathbb{E}_{\mathbf{u}_0} \left\{ \min_{\mathbf{s}} w_{\text{H}}(\mathbf{u}_0 \oplus \mathbf{s}\mathbf{G}_{\text{s}}|\mathbf{u}_0) \right\}. \end{aligned} \tag{19}$$

The last equality holds since both $\mathbf{u}_0$ and $\mathbf{u}_0 \oplus \mathbf{c}_0^{\text{opt}}$ are uniformly distributed over $\mathbb{F}_2^N$. Note that lower d_{av} indicates higher average power reduction capability, since the modulator input $\mathbf{c}_0$ can approach the optimal sequence $\mathbf{c}_0^{\text{opt}}$ by shaping on average. Therefore, our design objective of shaping codebook $\mathbf{s}\mathbf{G}_{\text{s}}$ is to minimize d_{av}.

B. Covering Problem and Perfect Codes

We have shown so far that the design objective of shaping codes in the proposed system is formulated as the minimization problem (19). In fact, the problem of minimizing (19) is closely related to the classical covering problem [48–50] which has been well studied with application to source coding and rate distortion theory.

The covering problem in the Hamming space is to find the minimum number of Hamming spheres required to cover a given Hamming space. Letting n be a positive integer, the *Hamming sphere*, or *ball* of radius r centered at the vector $\mathbf{x} \in \mathcal{C} \subseteq \mathbb{F}_2^n$, is defined as [50]:

$$\mathcal{B}_r(\mathbf{x}) \triangleq \{\mathbf{y} \in \mathbb{F}_2^n : d_{\text{H}}(\mathbf{x}, \mathbf{y}) \leq r\}, \tag{20}$$

where $d_{\text{H}}(\mathbf{x}, \mathbf{y})$ is a Hamming distance between $\mathbf{x}$ and $\mathbf{y}$, and its cardinality is

$$V(n, r) = \sum_{i=0}^{r} \binom{n}{i}. \tag{21}$$

A vector $\mathbf{x}$ is said to be *r-covering code* if $d_{\text{H}}(\mathbf{x}, \mathbf{y}) \leq r$, i.e., $\mathbf{y} \in \mathcal{B}_r(\mathbf{x})$.

For a code $\mathcal{C}$ with minimum Hamming distance d, an integer $e = \lfloor (d-1)/2 \rfloor$ is called *packing radius* or *error correcting capability*, where $\lfloor \cdot \rfloor$ is the floor function. A packing radius e is the largest integer such that the Hamming spheres of radius e centered at the codewords are disjoint. Then the *sphere-covering bound* or *Hamming bound* is given by

$$|\mathcal{C}| \leq \frac{2^n}{V(n, e)}, \tag{22}$$

where $|\mathcal{C}|$ is the number of codewords of the code $\mathcal{C}$. For a code with packing radius e and covering radius r, we always have $e \leq r$. The equality holds when the sphere-covering bound is achieved. The codes that achieve the sphere-covering bound are called *perfect codes* and known only for some code lengths, such as odd-length binary repetition codes, Hamming codes, and Golay codes (without extension). On the other hand, repetition codes with even code length, extended Hamming code,s and extended Golay codes are *quasi-perfect*

This article has been accepted for publication in a future issue of this journal, but has not been fully edited. Content may change prior to final publication. Citation information: DOI 10.1109/TCOMM.2021.3111032, IEEE Transactions on Communications

codes whose covering radius is one greater than its packing radius.

The covering problem is equivalent to minimizing the covering radius for a given code dimension. For a code $\mathcal{C}$ over $\mathbb{F}_2^n$, the covering radius is defined as

$$d(C) \triangleq \max_{\mathbf{y}\in\mathbb{F}_2^n}\left\{\min_{\mathbf{x}\in\mathcal{C}} w_{\mathrm{H}}(\mathbf{x}\oplus\mathbf{y})\right\}. \tag{23}$$

Based on (19) and (23), we observe that the problem of the shaping code design in the proposed system and the covering problem are closely related. The major difference is that the definition of a covering radius involves the max operation with respect to $\mathbb{F}_2^n$, instead of an expectation operation in (19). Therefore, the use of the perfect codes that are optimal in the sense of the covering radius would be optimal in terms of the worst-case shaping performance of the proposed system, rather than the *average* performance. Even though this does not guarantee that the perfect codes are strictly optimal as a shaping code in the proposed system, it offers excellent shaping gains in practice as demonstrated in Section V.

IV. Complexity Evaluation

In what follows, we assess complexities of the proposed shaping in terms of storage and computation, in comparison with those of the ESS. Our complexity measures are the amount of storage in bits, and the number of bit operations (1-bit additions/subtractions) required for each scheme, similar to [31].

A. Storage Complexity

The proposed scheme stores a generator matrix of (N, K) shaping codes, which consists of NK bits. This is expected to be small since we focus on short shaping block codes, i.e., small N.

For the ESS, a relatively large amount of storage is required due to the energy-bounded trellis. Specifically, the ESS requires a storage for an $(N+1)$-by-L matrix where each element is at most $\lceil NR_{\mathrm{DM}}\rceil$-bit long. Also, L is the number of energy levels, which is expressed as [31]

$$L = \left\lfloor \frac{E_{\max} - N}{8} \right\rfloor + 1, \tag{24}$$

where $E_{\max}$ is a parameter that determines a DM rate R_{DM}. Consequently, storage complexity of the ESS is expressed as $L(N+1)\lceil NR_{\mathrm{DM}}\rceil$ bits.

B. Computational Complexity

Recall that $|\mathcal{A}_M|$ denotes the cardinality of a set of amplitude symbols for M-ary PAM. The ESS requires $(|\mathcal{A}_M - 1|)$ subtractions and additions per dimension for shaping and inverse shaping, respectively. These numbers are at most $\lceil NR_{\mathrm{DM}}\rceil$-bit long, and thus the required number of bit operations is $(|\mathcal{A}_M - 1|)\lceil NR_{\mathrm{DM}}\rceil$ per amplitude symbol for both transmitter and receiver sides.

Unlike the ESS, computational complexities are different between the transmitter and the receiver sides for the proposed scheme.

1) Transmitter Complexity: As our shaping operation is based on soft-decision decoding of shaping codes, computational complexity at the transmitter side highly depends on a specific code as well as decoding algorithm that we assume. Although any soft-decision decoding algorithm can be used in principle, we consider exhaustive ML decoding in this work as it is applicable to any linear block shaping codes[4]. In the exhaustive ML decoding, we have 2^K shaping codeword patterns, for each of which a summation of N amplitude powers is required to calculate the total symbol power. Note that the summation of N symbol power is an integer of up to $N(2^m-1)^2$ and thus each element can be expressed by at most $\log_2 N(2^m-1)^2 = \lceil \log_2 N\rceil + 2m$-bit long. Consequently, $2^K(\lceil \log_2 N\rceil + 2m)$ bit additions are required at the transmitter side.

2) Receiver Complexity: The receiver complexity of the proposed scheme is dominated by encoding of shaping codes to generate an estimated shaping codeword $\widehat{\mathbf{s}}\mathbf{G}_{\mathrm{s}}$, which requires at most KN bit additions[5]. In addition, superposing an estimated shaping codeword $\widehat{\mathbf{s}}\mathbf{G}_{\mathrm{s}}$ on decoded bits $\widehat{\mathbf{c}}_0$ for recovering the original information $\widehat{\mathbf{u}}_0$ requires only one bit addition per amplitude symbol. Therefore, the total receiver complexity in terms of the number of bit operations per amplitude symbol is $K+1$.

Example: In Fig. 3, we plot the numbers of required storage and computational complexities for a target spectral efficiency of 6 bits per symbol with 256QAM (the same simulation setting as the BLER result in Fig. 6 in the next section). We observe from Fig. 3a that the required storage for the proposed shaping is much lower than that for the ESS, e.g., three and five orders of magnitude for $N = 8$ and $N = 24$, respectively. This stems from the bounded-energy trellis used by the ESS whose size can drastically increase as a symbol length increases. On the other hand, if we take a look at computational complexities in Fig. 3b, the transmitter complexity of the proposed shaping can be higher than that of the ESS, due to the exhaustive ML decoding of shaping codes. However, the receiver complexity of the proposed scheme is two orders of magnitude lower than that of the ESS since our inverse shaping operation is performed by encoding of shaping codes, which in general requires low complexity. We note that, as shown in Table I, computational complexity of the proposed scheme does not depend on a modulation order, whereas that of the ESS increases as a modulation order increases. It is also worthwhile mentioning that an efficient implementation of the ESS would be challenging due to its sequential nature. From the above discussion, we conclude that the proposed shaping scheme is more suited for the applications with strict constraint on space

[4]In practice, the exhaustive ML decoder would be feasible only for very short shaping codes, e.g., extended Hamming codes, and, it will become prohibitively complex for relatively long codes, e.g., extended Golay codes. However, we may use efficient ML decoding algorithms developed for specific shaping codes. For example, for binary Golay codes, it has been shown in [51] that ML decoding can be performed with at most 651 real operations (about 27 real operations per amplitude symbol). These efficient algorithms would significantly reduce the transmit computation of the proposed scheme.

[5]Here we consider multiplication by a generator matrix, but there may be more efficient encoding algorithm depending on a structure of specific shaping code.

This article has been accepted for publication in a future issue of this journal, but has not been fully edited. Content may change prior to final publication. Citation information: DOI 10.1109/TCOMM.2021.3111032, IEEE Transactions on Communications

TABLE I: Storage and computational complexities.

	Proposed	ESS [31]
Storage (bits)	KN	$L(N+1)\lceil NR_{\rm s}\rceil$
Transmitter Computation (bit oper. per symbol)	$2^K(\lceil\log_2 N\rceil+2m)$	$(\lvert\mathcal{A}_M-1\rvert)\lceil NR_{\rm s}\rceil$
Receiver Computation (bit oper. per symbol)	$K+1$	$(\lvert\mathcal{A}_M-1\rvert)\lceil NR_{\rm s}\rceil$

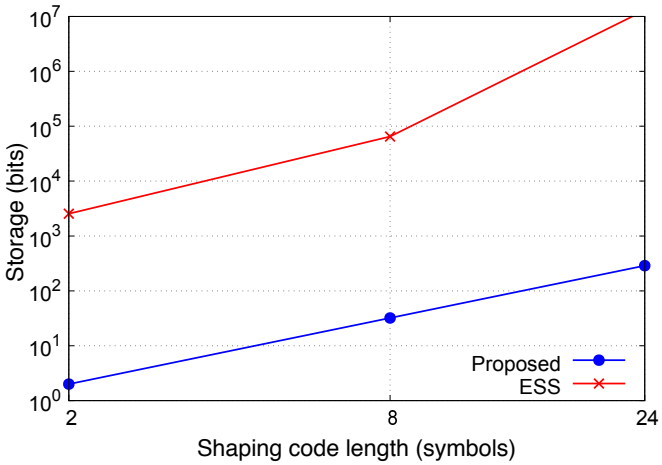

(a) Required storage in bits.

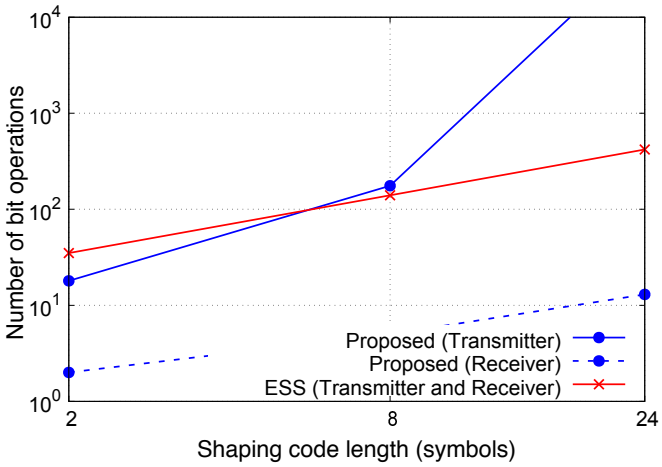

(b)

Fig. 3: Complexity comparisons of the proposed shaping and the ESS [31] for $R_{\rm DM}=2.5$ bits per amplitude symbol (corresponding to the BLER results in Fig. 6). (a) Space complexity in terms of the required storage in bits (b) computational complexity in terms of the number of bit operations (1-bit additions/subtractions per amplitude symbol).

complexity, and also with limited computational complexity at the receiver side.

V. Numerical Results

In this section, we compare the shaping gain of the proposed system with that of the ESS [31]. We also evaluate the error rate performance in terms of BLER.

In this paper, we focus only on an overall spectral efficiency of $m-1$ bits per dimension for the proposed scheme with 2^m-ary PAM (the additional rate is zero). In order to make fair comparisons in terms of the overall spectral efficiency,

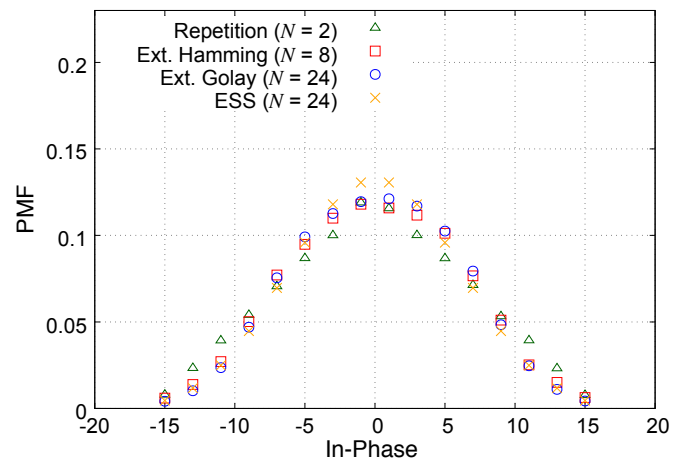

Fig. 4: PMF achieved by the proposed shaping scheme and the ESS with 16PAM (256QAM).

the DM rate of the conventional scheme is chosen to satisfy $R_{\rm DM}+\gamma=m-1$. The resulting code rates of the proposed and the conventional systems are $R_{\rm c}=((m-1)+R_{\rm s})/m$ and $R_{\rm c}=((m-1)+\gamma)/m$, respectively. Therefore, by setting the additional rate of the conventional scheme γ equal to $R_{\rm s}$ of the proposed system, we compare the two systems with the same spectral efficiency, as well as the same FEC code rate.

For the ESS, a parameter $E_{\rm max}$ determines a shaping rate in terms of the number of bits per amplitude symbols. In what follows, for 8PAM, we use $E_{\rm max}=34$, 88 and 216 for $N=2$, 8 and 24, respectively, resulting in a shaping rate of 1.5 bits per amplitude symbol. For 16PAM, $E_{\rm max}=170$, 360, and 864 are used for $N=2$, 8, and 24, respectively, targeting at a shaping rate of 2.5 bits per amplitude symbol.

A. Shaping Gain

We first plot the probability mass function (PMF) of 16PAM (in-phase of 256QAM) constellation achieved by the proposed system in Fig. 4, where we use $(2,1)$ repetition code, extended $(8,4)$ Hamming code, and extended $(24,12)$ Golay code as our example shaping codes of rate $R_{\rm s}=1/2$. For comparison, we also plot the PMF achieved by the conventional PAS with $\gamma=0.5$ employing ESS of length $N=24$ for the same target spectral efficiency. From Fig. 4, we observe that the proposed shaping achieves capacity-approaching Gaussian-like distribution. Especially, with extended Hamming and Golay codes, the PMFs achieved by the proposed scheme is close to that of the ESS, which is optimal in the sense of power efficiency.

From the results in Fig. 4, we may calculate the shaping

This article has been accepted for publication in a future issue of this journal, but has not been fully edited. Content may change prior to final publication. Citation information: DOI 10.1109/TCOMM.2021.3111032, IEEE Transactions on Communications

TABLE II: Shaping gaps from the optimal MB distribution for 16PAM.

ESS [31]			Ext. Hamming	Ext. Golay
$N=2$	$N=8$	$N=24$	$N=8$	$N=24$
1.69 dB	0.79 dB	0.41 dB	0.88 dB	0.56 dB

gaps from a target distribution, which is defined as

$$\Gamma \triangleq 10\log_{10}\frac{P_{\text{av}}}{P'_{\text{av}}}, \tag{25}$$

where P_{av} and P'_{av} are the actual average symbol power and that achieved by the target Maxwell–Boltzmann (MB) distribution, respectively. A smaller shaping gap means that the shaping scheme is closer to the target. Note that the MB distribution is an optimal signal distribution that maximizes entropy under average power constraint, and thus commonly used as a target distribution in the framework of PAS [14].

Table II shows the shaping gaps of the proposed method and the ESS for 16PAM at a DM rate of $R_{\text{DM}} = 2.5$ bits per amplitude symbol. From this table, we find that the shaping gap performance of the proposed system based on the extended Hamming code with length $N = 8$ is slightly inferior (by less than 0.1 dB) to the ESS of the same length. Also, for a symbol length of $N = 24$, the ESS outperforms the proposed scheme by about 0.15 dB. In the subsequent subsection, we evaluate complexities of the proposed shaping and the ESS in order to make a comparison in terms of performance-complexity trade-offs.

B. Block Error Rate (BLER) Performance

In what follows, we evaluate the BLER performance of the proposed system. For short block length codes, the Polyanskiy, Poor, and Verdú (PPV) bound for finite block lengths [52] is also plotted as a reference. We employ systematic polar codes as FEC codes for 64QAM and 256QAM, where a two-dimensional QAM symbol consists of two independent PAM symbols allocated to in-phase and quadrature components. Polar codes are designed using Tal and Vardy's method [53] for a target signal-to-noise ratio (SNR) of 3 dB assuming binary-input additive white Gaussian noise (AWGN) channels in all cases. For decoding polar codes, we use successive cancellation list (SCL) decoding with a list size of 16 in conjunction with an 8-bit cyclic redundancy check (CRC) code [54]. We set the target BLER as 10^{-3} in all cases.

Fig. 5 shows the performances with 64QAM and a polar code of length $N_{\text{c}} = 4096$ bits, corresponding to a block length of $N_{\text{symbol}} = 683$ symbols. The polar code with rate $R_{\text{c}} = 5/6$ is assumed except for the system without shaping for which a polar code with $R_{\text{c}} = 2/3$ is used. it is observed that, with the extended Hamming code ($N = 8$) and the extended Golay code ($N = 24$) as our shaping codes, the proposed system achieves about 0.3 dB and 0.7 dB shaping gains at a BLER of 10^{-3}. The shaping gains of the proposed scheme are comparable to those of the ESS of the same lengths, while the ESS achieve slightly better performance than the proposed scheme by approximately 0.1 dB. As we will see next, a shaping gain of the proposed system becomes more significant as a target spectral efficiency increases.

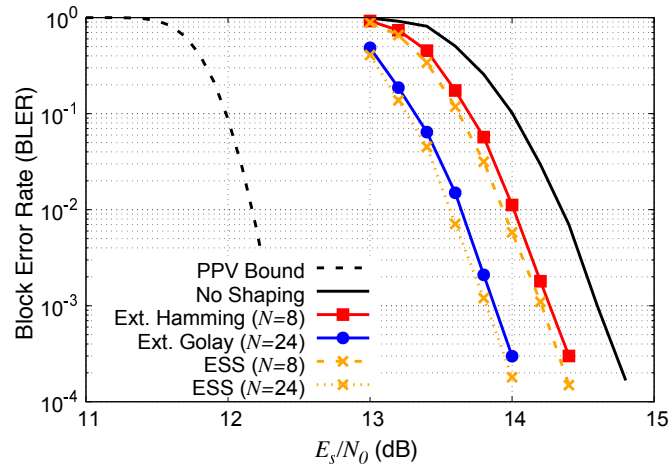

Fig. 5: BLER performances all at spectral efficiency of 4 bits per symbol with 64QAM ($N_{\text{symbol}} = 683$ symbols). Polar codes of rate $5/6$ and $2/3$ are used for the case with and without shaping, respectively.

Fig. 6 shows the BLER performances with 256QAM for a polar code of length $N_{\text{c}} = 4096$ bits, corresponding to a block length of $N_{\text{symbol}} = 512$ symbols. The polar code rate is set as $R_{\text{c}} = 7/8$, except for the system without shaping for which a polar code with $R_{\text{c}} = 3/4$ is employed. We see that the proposed system using the extended Hamming code and the extended Golay code for shaping offer about 0.7 dB and 1.0 dB gains over the system without shaping. We also observe that, similar to Fig. 5, the proposed shaping achieves similar performance to the ESS, and their performance gaps are about 0.1 dB. Considering complexities in Fig. 3, we conclude that the proposed shaping is capable of achieving similar performances to the ESS with significantly lower storage complexity, as well as computational complexity at the receiver side.

Finally, we investigate performances with low-complexity repetition shaping codes for the same spectral efficiency of 6 bits per symbol in Fig. 7, where repetition codes of rate $R_{\text{s}} = 1/2$, $1/4$, and $1/6$ resulting in FEC rates of $R_{\text{c}} = 7/8$, $13/16$, and $19/24$, respectively, are examined. For comparison, performances of the ESS with the same shaping and FEC rates as our scheme are plotted. For the ESS, parameters $E_{\max} =$ 170, 332, and 502 are used for $N = 2$, 4, and 6, respectively. It is observed from Fig. 7 that the proposed repetition code-based shaping achieves similar performance to the ESS of the same length. Also, it is observed that performance highly depends on a combination of shaping and FEC rates. More specifically, in Fig. 7, the repetition code of rates $1/4$ and $1/6$ achieves about 0.3 dB better performance at BLER of 10^{-3} than that of the half-rate code. In Table III, we also compare storage and computational complexities of the two schemes for the same setting as Fig. 7, where lower complexities of the proposed shaping with repetition codes in terms of the storage, as well as both transmitter and receiver computational complexities are observed. This indicates that better performance-complexity

This article has been accepted for publication in a future issue of this journal, but has not been fully edited. Content may change prior to final publication. Citation information: DOI 10.1109/TCOMM.2021.3111032, IEEE Transactions on Communications

TABLE III: Storage and computational complexities for the simulation setting in Fig. 7.

Proposed / ESS	$N=2$	$N=4$	$N=6$
Storage (bits)	2 / 2550	4 / 2240	6 / 7497
Transmitter Computation (bit oper. per symbol)	18 / 35	20 / 75	22 / 119
Receiver Computation (bit oper. per symbol)	2 / 35	2 / 75	2 / 119

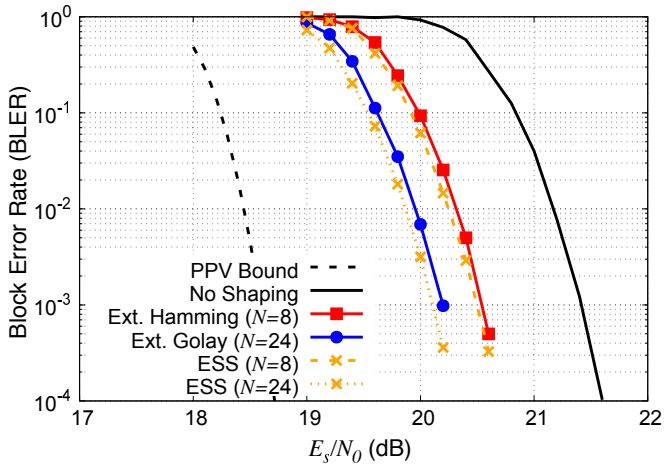

Fig. 6: BLER performances all at spectral efficiency of 6 bits per symbol with 256QAM ($N_{\text{symbol}} = 512$ symbols). Polar codes of rate $7/8$ and $3/4$ are used for the case with and without shaping, respectively.

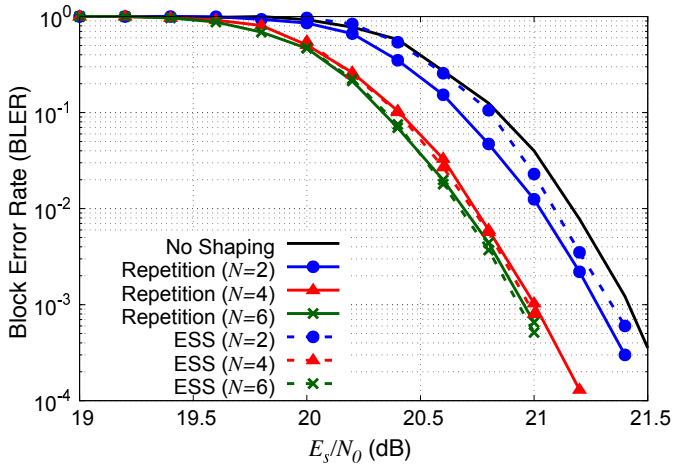

Fig. 7: BLER performances all at spectral efficiency of 6 bits per symbol with 256QAM ($N_{\text{symbol}} = 512$ symbols).

trade-off can be achieved by the proposed repetition code-based shaping compared to the ESS. Although its shaping gains are smaller than those of extended Hamming and Golay shaping codes, repetition shaping codes would be important in practice especially for the applications where a low-cost or low-power implementation of rate adaptation is of primary concern.

VI. Conclusion

We have proposed a novel probabilistic shaping scheme based on short linear block codes aiming for low-complexity and low-latency shaping implementations. We have introduced a new PAS approach where the capacity-approaching signal distribution is generated by soft-decision decoding of linear shaping block codes. We described the relationship between design of a shaping code in the proposed system and classical covering problems, based on which we proposed the use of good covering codes for shaping. Performance results demonstrated that the proposed shaping method employing short linear codes of even less than 24 symbols can achieve a moderate performance gain of up to 1.0 dB over the system without shaping. From the discussion of performance-complexity trade-offs, it has been verified that the proposed code-based shaping can achieve significantly lower storage complexity as well as computational complexity at the receiver side, compared to the ESS with similar performances. We also demonstrated that the use of repetition codes as a shaping code would be especially advantageous in terms of performance-complexity trade-offs.

As a final remark, one of the major advantages of PAS based on DM is rate adaptivity, which is achieved by changing shaping code rates for the proposed system. In this work, we focused only on perfect binary codes as our shaping codes, whose length and rate are limited. Investigating other shaping codes, as well as various code parameters, i.e., lengths and rates, is left as future work.

Acknowledgement

The authors would like to thank the editor and anonymous reviewers for their comments which have improved the paper.

References

[1] G. D. Forney, R. Gallager, G. Lang, F. Longstaff, and S. Qureshi, "Efficient modulation for band-limited channels," *IEEE J. Sel. Areas Commun.*, vol. 2, no. 5, pp. 632–647, Sep. 1984.

[2] G. D. Forney and L.-F. Wei, "Multidimensional constellations. I. Introduction, figures of merit, and generalized cross constellations," *IEEE J. Sel. Areas Commun.*, vol. 7, no. 6, pp. 877–892, Aug. 1989.

[3] T. V. Ramabadran, "A coding scheme for m-out-of-n codes," *IEEE Trans. Commun.*, vol. 38, no. 8, pp. 1156–1163, 1990.

[4] F. Willems and J. Wuijts, "A pragmatic approach to shaped coded modulation," in *IEEE 1st Symp. on Commun. and Veh. Technol. in the Benelux*, 1993.

[5] R. Laroia, N. Farvardin, and S. A. Tretter, "On optimal shaping of multidimensional constellations," *IEEE Trans. Inf. Theory*, vol. 40, no. 4, pp. 1044–1056, 1994.

[6] F. Buchali, F. Steiner, G. Böcherer, L. Schmalen, P. Schulte, and W. Idler, "Rate adaptation and reach increase by probabilistically shaped 64-QAM: An experimental demonstration," *J. Lightw. Technol.*, vol. 34, no. 7, pp. 1599–1609, 2016.

[7] T. Fehenberger, A. Alvarado, G. Böcherer, and N. Hanik, "On probabilistic shaping of quadrature amplitude modulation for the nonlinear fiber channel," *J. Lightw. Technol.*, vol. 34, no. 21, pp. 5063–5073, 2016.

[8] B. P. Smith and F. R. Kschischang, "A pragmatic coded modulation scheme for high-spectral-efficiency fiber-optic communications," *J. Lightw. Technol.*, vol. 30, no. 13, pp. 2047–2053, 2012.

[9] L. Beygi, E. Agrell, J. M. Kahn, and M. Karlsson, "Rate-adaptive coded modulation for fiber-optic communications," *J. Lightw. Technol.*, vol. 32, no. 2, pp. 333–343, 2014.

This article has been accepted for publication in a future issue of this journal, but has not been fully edited. Content may change prior to final publication. Citation information: DOI 10.1109/TCOMM.2021.3111032, IEEE Transactions on Communications

[10] R.-J. Essiambre, G. Foschini, P. Winzer, and G. Kramer, "Capacity limits of fiber-optic communication systems," in *Proc. Optical Fiber Communications Conference (OFC)*, 2009, p. OThL1.

[11] I. Djordjevic, T. Liu, L. Xu, and T. Wang, "Optimum signal constellation design for high-speed optical transmission," in *Proc. Optical Fiber Communications Conference (OFC)*, 2012, pp. OW3H–2.

[12] T. Koike-Akino, D. Millar, K. Parsons, and K. Kojima, "GMI-maximizing constellation design with grassmann projection for parametric shaping," in *Proc. Optical Fiber Communications Conference (OFC)*, 2016, pp. M2A–4.

[13] A. R. Calderbank and L. H. Ozarow, "Nonequiprobable signaling on the Gaussian channel," *IEEE Trans. Inf. Theory*, vol. 36, no. 4, pp. 726–740, Jul. 1990.

[14] G. Böcherer, F. Steiner, and P. Schulte, "Bandwidth efficient and rate-matched low-density parity-check coded modulation," *IEEE Trans. Commun.*, vol. 63, no. 12, pp. 4651–4665, Dec. 2015.

[15] J. Cho and P. J. Winzer, "Probabilistic constellation shaping for optical fiber communications," *J. Lightw. Technol.*, vol. 37, no. 6, pp. 1590–1607, 2019.

[16] G. Böcherer, P. Schulte, and F. Steiner, "Probabilistic shaping and forward error correction for fiber-optic communication systems," *J. Lightw. Technol.*, vol. 37, no. 2, pp. 230–244, 2019.

[17] P. Schulte and G. Böcherer, "Constant composition distribution matching," *IEEE Trans. Inf. Theory*, vol. 62, no. 1, pp. 430–434, 2016.

[18] G. D. Forney, "Trellis shaping," *IEEE Trans. Inf. Theory*, vol. 38, no. 2, pp. 281–300, Mar. 1992.

[19] O. İşcan, R. Böhnke, and W. Xu, "Shaped polar codes for higher order modulation," *IEEE Commun. Lett.*, vol. 22, no. 2, pp. 252–255, Feb. 2018.

[20] T. Matsumine, T. Koike-Akino, D. S. Millar, K. Kojima, and K. Parsons, "Polar-coded modulation for joint channel coding and probabilistic shaping," in *Proc. Optical Fiber Communication Conference (OFC)*, 2019, p. M4B.2.

[21] T. Yoshida, M. Karlsson, and E. Agrell, "Hierarchical distribution matching for probabilistically shaped coded modulation," *J. Lightw. Technol.*, vol. 37, no. 6, pp. 1579–1589, 2019.

[22] S. Y. Le Goff, B. K. Khoo, C. C. Tsimenidis, and B. S. Sharif, "Constellation shaping for bandwidth-efficient turbo-coded modulation with iterative receiver," *IEEE Trans. Wireless Commun.*, vol. 6, no. 6, Jun. 2007.

[23] M. C. Valenti and X. Xiang, "Constellation shaping for bit-interleaved LDPC coded APSK," *IEEE Trans. Commun.*, vol. 60, no. 10, pp. 2960–2970, Oct. 2012.

[24] F. R. Kschischang and S. Pasupathy, "Optimal nonuniform signaling for Gaussian channels," *IEEE Trans. Inf. Theory*, vol. 39, no. 3, pp. 913–929, May 1993.

[25] J. Cho, "Prefix-free code distribution matching for probabilistic constellation shaping," *IEEE Trans. Commun.*, vol. 68, no. 2, pp. 670–682, 2019.

[26] D. Raphaeli and A. Gurevitz, "Constellation shaping for pragmatic turbo-coded modulation with high spectral efficiency," *IEEE Trans. Commun.*, vol. 52, no. 3, pp. 341–345, 2004.

[27] S. Iqbal, E. P. da Silva, M. P. Yankov, L. K. Oxenløwe, and S. Forchhammer, "An experimental demonstration of rate-adaptation using shaped polar codes for flexible optical networks," *J. Lightw. Technol.*, vol. 37, no. 13, pp. 3357–3364, 2019.

[28] T. Fehenberger, D. S. Millar, T. Koike-Akino, K. Kojima, and K. Parsons, "Multiset-partition distribution matching," *IEEE Trans. Commun.*, vol. 67, no. 3, pp. 1885–1893, Nov. 2018.

[29] D. S. Millar, T. Fehenberger, T. Koike-Akino, K. Kojima, and K. Parsons, "Distribution matching for high spectral efficiency optical communication with multiset partitions," *J. Lightw. Technol.*, vol. 37, no. 2, pp. 517–523, Mar. 2019.

[30] A. Amari, S. Goossens, Y. C. Gultekin, O. Vassilieva, I. Kim, T. Ikeuchi, C. Okonkwo, F. M. Willems, and A. Alvarado, "Introducing enumerative sphere shaping for optical communication systems with short blocklengths," *arXiv preprint arXiv:1904.06601*, 2019.

[31] Y. C. Gültekin, W. J. van Houtum, A. Koppelaar, and F. M. Willems, "Enumerative sphere shaping for wireless communications with short packets," *IEEE Trans. Wireless Commun.*, vol. 19, no. 2, pp. 1098–1112, 2020.

[32] P. Schulte and F. Steiner, "Divergence-optimal fixed-to-fixed length distribution matching with shell mapping," *IEEE Wireless Commun. Lett.*, vol. 8, no. 2, pp. 620–623, 2019.

[33] T. Matsumine, T. Koike-Akino, D. S. Millar, K. Kojima, and K. Parsons, "Short lattice-based shaping approach exploiting non-binary coded modulation," in *Proc. 45th European Conference on Optical Communication (ECOC)*, 2019, pp. 1–3.

[34] T. Fehenberger, D. S. Millar, T. Koike-Akino, K. Kojima, K. Parsons, and H. Griesser, "Huffman-coded sphere shaping and distribution matching algorithms via lookup tables," *J. Lightw. Technol.*, vol. 38, no. 10, pp. 2826–2834, 2020.

[35] J. H. Conway and N. J. A. Sloane, *Sphere Packings, Lattices and Groups*. Springer Science & Business Media, 2013, vol. 290.

[36] R. Zamir, "Lattices are everywhere," in *Proc. 2009 Information Theory and Applications Workshop*, 2009, pp. 392–421.

[37] E. Agrell and M. Karlsson, "Power-efficient modulation formats in coherent transmission systems," *J. Lightw. Technol.*, vol. 27, no. 22, pp. 5115–5126, 2009.

[38] D. S. Millar, T. Koike-Akino, S. Ö. Arık, K. Kojima, K. Parsons, T. Yoshida, and T. Sugihara, "High-dimensional modulation for coherent optical communications systems," *Optics Express*, vol. 22, no. 7, pp. 8798–8812, 2014.

[39] A. Mirani, E. Agrell, and M. Karlsson, "Low-complexity geometric shaping," *J. Lightw. Technol.*, 2020.

[40] J. Conway and N. Sloane, "Fast quantizing and decoding and algorithms for lattice quantizers and codes," *IEEE Trans. Inf. Theory*, vol. 28, no. 2, pp. 227–232, 1982.

[41] A. Alvarado, E. Agrell, D. Lavery, R. Maher, and P. Bayvel, "Replacing the soft-decision FEC limit paradigm in the design of optical communication systems," *J. Lightw. Technol.*, vol. 33, no. 20, pp. 4338–4352, 2015.

[42] A. Alvarado and E. Agrell, "Four-dimensional coded modulation with bit-wise decoders for future optical communications," *J. Lightw. Technol.*, vol. 33, no. 10, pp. 1993–2003, 2015.

[43] U. Wachsmann, R. F. Fischer, and J. B. Huber, "Multilevel codes: theoretical concepts and practical design rules," *IEEE Trans. Inf. Theory*, vol. 45, no. 5, pp. 1361–1391, Jul. 1999.

[44] E. Agrell, J. Lassing, E. G. Strom, and T. Ottosson, "On the optimality of the binary reflected Gray code," *IEEE Trans. Inf. Theory*, vol. 50, no. 12, pp. 3170–3182, 2004.

[45] J. Cho, S. Chandrasekhar, R. Dar, and P. J. Winzer, "Low-complexity shaping for enhanced nonlinearity tolerance," in *Proc. 42th European Conference on Optical Communication (ECOC)*, 2016, pp. 1–3.

[46] Z. Qu, S. Zhang, and I. B. Djordjevic, "Universal hybrid probabilistic-geometric shaping based on two-dimensional distribution matchers," in *Proc. Optical Fiber Communication Conference (OFC)*, 2018, pp. 1–3.

[47] M. Stark, F. A. Aoudia, and J. Hoydis, "Joint learning of geometric and probabilistic constellation shaping," in *Proc. 2019 IEEE Globecom Workshops (GC Wkshps)*, 2019, pp. 1–6.

[48] G. Cohen, M. Karpovsky, H. Mattson, and J. Schatz, "Covering radius—survey and recent results," *IEEE Trans. Inf. Theory*, vol. 31, no. 3, pp. 328–343, 1985.

[49] R. Graham and N. Sloane, "On the covering radius of codes," *IEEE Trans. Inf. Theory*, vol. 31, no. 3, pp. 385–401, 1985.

[50] G. Cohen, I. Honkala, S. Litsyn, and A. Lobstein, *Covering codes*. Elsevier, 1997.

[51] A. Vardy and Y. Be'ery, "More efficient soft decoding of the Golay codes," *IEEE Trans. Inf. Theory*, vol. 37, no. 3, pp. 667–672, 1991.

[52] Y. Polyanskiy, H. V. Poor, and S. Verdú, "Channel coding rate in the finite blocklength regime," *IEEE Trans. Inf. Theory*, vol. 56, no. 5, pp. 2307–2359, May 2010.

[53] I. Tal and A. Vardy, "How to construct polar codes," *IEEE Trans. Inf. Theory*, vol. 59, no. 10, pp. 6562–6582, 2013.

[54] ——, "List decoding of polar codes," *IEEE Trans. Inf. Theory*, vol. 61, no. 5, pp. 2213–2226, May 2015.

Toshiki Matsumine (M) received the M.E. and Ph.D. degrees in information and communication engineering from Yokohama National University, Yokohama, Japan, in 2017 and 2020, respectively. In 2019, he held a research internship at Mitsubishi Electric Research Laboratories, Cambridge, MA, USA. He is currently a postdoctoral researcher at the Technical University of Denmark. His current research interests include forward error correction and coded modulation.

This article has been accepted for publication in a future issue of this journal, but has not been fully edited. Content may change prior to final publication. Citation information: DOI 10.1109/TCOMM.2021.3111032, IEEE Transactions on Communications

PLACE PHOTO HERE

Toshiaki Koike-Akino unavailable

Hideki Ochiai (SM) received the Ph.D. degree in information and communication engineering from the University of Tokyo, Tokyo, Japan, in 2001. From 2001 to 2003, he was a Research Associate at the University of Electro-Communications, Tokyo, Japan. Since April 2003, he has been with Yokohama National University, Yokohama, Japan, where he is currently a Professor. From 2003 to 2004, he was a Visiting Scientist at Harvard University, Cambridge, MA, USA. From 2019 to 2020, he was a Visiting Professor at the University of Waterloo, ON, Canada, and a Visiting Fellow at Princeton University, NJ, USA.

Dr. Ochiai served as an Editor for the *IEEE Transactions on Wireless Communications* from 2007 to 2011 and for the *IEEE Wireless Communications Letters* from 2011 to 2016.