Autonomously Distributed Control of EV Parking Lot Management for Optimal Grid Integration

Striani, Simone; Sevdari, Kristian; Andersen, Peter Bach; Marinelli, Mattia; Kobayashi, Yuki; Suzuki, Kenta

Published in:
Proceedings of 2022 International Conference on Renewable Energies and Smart Technologies

Link to article, DOI:
10.1109/REST54687.2022.10022907

Publication date:
2023

Document Version
Peer reviewed version

Autonomously Distributed Control of EV Parking Lot Management for Optimal Grid Integration

Simone Striani, Kristian Sevdari,
Peter Bach Andersen, Mattia Marinelli
Department of Wind and Energy Systems
Technical University of Denmark
Roskilde, Denmark
{sistri; krisse; petb; matm}@dtu.dk

Yuki Kobayashi, Kenta Suzuki
EV System Laboratory
Nissan Motor Co., Ltd.
Yokosuka, Japan
{yuki-kobayashi; ke-suzuki}@mail.nissan.co.jp

***Abstract*—This paper proposes an autonomous distributed control design for coordinating the charging process of parking lots for electric vehicles (EVs). The focus of this paper is to investigate the performance of the modeled architecture. The model simulates for 24 hours an office parking lot scenario with real input data from 16 EVs. The primary objective is to quantify the fulfillment of the demand and the guaranteed amount of energy for each user. The secondary objective is to analyze the effects of restricting the power capacity of the parking lot from 88 kW to 43 kW. In the constrained charging scenario, the system guarantees a minimum energy of 12.2 kWh (roughly 61 km) to each car connected for at least 5 hours and 54 minutes. In the unconstrained charging scenario 12 EVs reach maximum state-of-charge (SOC), while 11 EVs reach it in the constrained one. Demand fulfillment is only marginally different between the two scenarios because the final SOC values of the EVs are nearly the same. On the other hand, constraining connection capacity reduces significantly the idle state of six chargers.**

***Index Terms*—Electric Vehicle, Distribution Grid, Smart Charging, Flexibility**

I. Introduction

Electric grids must withstand the increased volatility of energy production and energy demand. On the production side, this is because electricity production will gradually shift towards renewable energy sources (RES), which are less predictable and controllable. On the demand side, this is because electric vehicles (EVs) will gradually become the main private means of transportation [1]. The charging of large EV fleets will increase the amplitude of peak energy demand due to concurrent charging in peak hours [2], [3]. Smart charging is a technology that allows EVs to become flexible loads for the grid and deliver flexibility services to the distribution and transmission system [4] . Consequently, this technology has the potential to mitigate the negative impacts of the penetration of RES and EVs [5]. As a results, the mass roll-out of smart chargers offers the opportunity to reduce or delay expensive grid upgrades [6]. Smart charging is a novel technology, therefore extensive experimental data on its optimal features and development is needed [7]. For instance, it needs to be further technically developed, standardized, and exhaustively tested before its full roll-out. Many technical aspects of the technology need to be further developed: the chargers technical characteristics and the information and communication technology (ICT) need to be standardized so that interoperability is ensured between chargers, EVs, smart meters and grid components [8]. The smart charging technology can be investigated through experimental campaigns and mathematical modeling of charging clusters. Demonstration campaigns are the starting point for the generation of data to be used for the further development of the technology [9]. Grid observability of already deployed chargers is the key to the development of smart charging on a large scale; therefore, deployed chargers should be coupled with smart meters to generate real usage data in different scenarios [10]. The design of mathematical models is the starting point for understanding the interaction between the clusters and the vehicles for behind-the-meter (BTM) services, and between the clusters and the grid for front-of-the-meter (FTM) services [11]. In short, BTM services are a series of power and energy services that can be used to fulfill specific user's needs. They are generally provided to users or the building connected to the parking lot by the system. Examples of BTM services are energy arbitrage, power sharing and power scheduling between EVs. FTM services are other power and energy services meant to benefit the grid and to ensure its optimal performances. They are managed by its operators (such as DSOs and TSOs). Some FTM services are congestion management, peak-shaving and voltage unbalance reduction. A more complete description of the grid services can be found in [11]. This paper focuses on the technical side of the development of smart charging, through the modelling of a smart charger based on a distributed control architecture. The focus is on BTM services and on illustrating the design and performance of such a control architecture. The rest of the paper is structured as follows. Section II describes the objective of the research in more detail; Section III describes the methodology adopted for the study; Section IV introduces the results of the case study simulation; Section V provides conclusions and future work.

II. Objectives of the Research

This work is part of the modelling and demonstration activities of the ACDC project (Autonomously Controlled Distributed Chargers). The project aims to develop a clustering method for smart chargers in which different parking lots can be monitored and governed with a distributed control architecture. Such an architecture consists of two control intelligences: the cloud aggregator (CA) and the virtual aggregator (VA). The former is responsible for the coordination of different parking lots for the provision of flexibility services FTM and grid integration. The latter is

responsible for the coordination of the different chargers within a parking lot for BTM services. The user can interact with the system to check charging schedule and monitoring the charging session. The CA will guarantee full controllability by grid operators for the provision of flexibility services on the market. The VA will guarantee maximization of user comfort and minimization of charging point operators' (CPO) expenses.

This study will focus on the local control architecture, describing the VA and illustrating the performance of the parking lot components, in terms of fulfillment of the users' charging sessions. Therefore, the control architecture needs to ensure that each user of the parking lot has a certain minimum amount of energy available at the end of the charging session. The parking lot model performs power scheduling and power sharing among the connected EVs throughout the day. The research objectives of this paper are:

- Analysing the performance of power scheduling and power sharing functions in order to lower the point of common coupling (PCC) connection capacity.
- Giving an overview of the EV charging sessions in order to measure the capacity of the parking lot to fulfill the users' demand.
- Measuring the flexibility available in the parking lot in terms of chargers' idle time and surplus energy available.

III. Methodology

This section describes the methodology implemented in this paper. The model developed uses as a starting point the model previously built in [12].

A. Comparison of control architecture strategies

There are several types of control architectures. They can be classified as centralized, decentralized, or distributed [13]. The centralized control architecture consists of one central control element that collects information from the grid and decides the power set-points for the power demand / supply of every device remotely. In the decentralized control architecture, the central (common) control objective is pursued independently by local control elements independently; therefore, local control elements only use local measurements and actuators. The distributed control architecture, instead, contains both a central controller (in this case the CA) and a local controller (in this case the VA). The central controller coordinates charging clusters on a higher level. For example, CA receives information from the grid and dispatches set-points to the local controller. At the lower level, local controllers process and distribute the set-points among the different devices with local communication. The advantages and drawbacks of centralized control, distributed control, and decentralized control are described in [14]. Although previous smart charging strategies rely on a centralized control approach [15], this study exploits the distributed control approach. The dual nature of the communication, both local and cloud-based, is worth being explored for several reasons: with this strategy, the charger would be capable of working even if the communication with the grid is interrupted, or if one of the chargers stops working; moreover, the local communications between the controlling units is faster and more robust [16].

B. Global system architecture

Fig. 1 provides an overall illustration of the control architecture applied to a number of N clusters. The CA and the VA are, respectively, two intelligences that control the parking lot power demand both according to the status of the grid and to the preferences of the EV users.

The CA is the global intelligence, and it has two main functions: the first is receiving signals from the grid, such as RES production, electricity price, and grid congestion. The CA translates these inputs into power set-points and sends them to the VA of each cluster. The second function is to receive user inputs (via the mobile app) and to distribute them to the VAs. The users' inputs are the state of charge (SOC) at the time of plug-in, the battery capacity and the scheduled time of departure. The VA is the local intelligence and broadcasts power set-points received from the CA to all the chargers of its cluster. Based on user preferences, the VA gives instructions to the chargers, such as charging priority and power scheduling based on SOC. Lastly, the smart meter feedbacks the power consumed to the CA, so that the CA can continuously redistribute the power among the parking lots according to the availability of cars and local grid conditions.

C. Local system architecture

Fig. 2 provides a simplified illustration of the model for a single cluster. Each charger is composed of the VA (divided into primary and secondary functions) and the charger controller. The parking lot contains N chargers. In the parking lot, there is a smart meter connected to the point of common coupling (PCC). The primary function of the VA (shortly VA_primary) is the constant power set point reception from the cloud and consequent constant adjustment of the total demand of the parking lot. VA_primary is active only in one of the chargers, to avoid redundancy in communication. However, in case of its malfunctioning, other chargers can automatically replace it with their VA. The secondary function of the VA (shortly VA_secondary) is to schedule and share charging power among the EVs, and it is active in all the N chargers. A description of the power and information flow follows: On the left, the

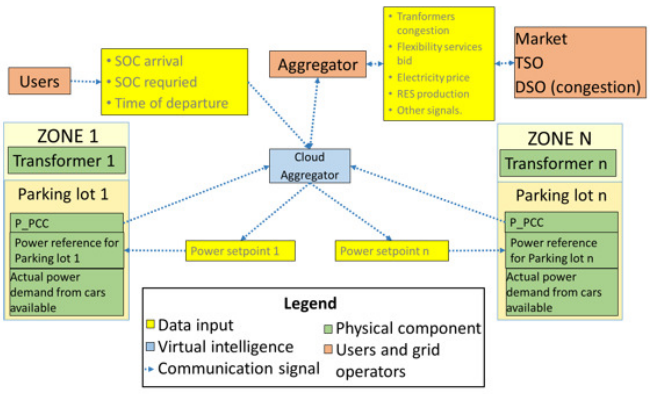

Fig. 1. Global system architecture and communication paths between different actors.

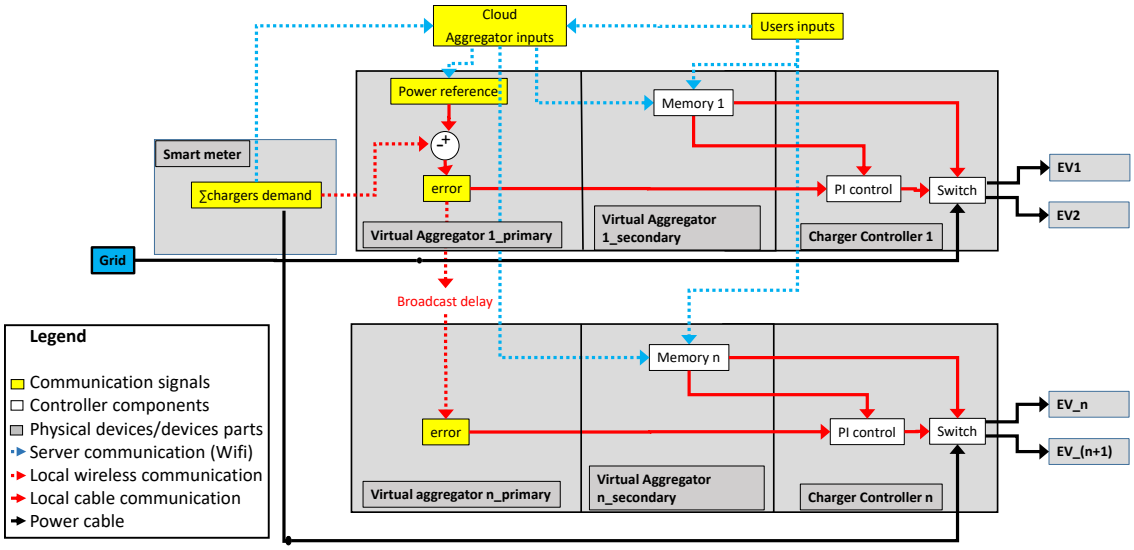

Fig. 2. Local system architectures and communication between different components of the parking lot.

smart meter records the power flowing from the grid to the chargers. The smart meter sends the consumption measurements through wired communication to VA1_primary, part of charger 1. VA1_primary also receives set-points from the CA via Wi-Fi or Ethernet communication. Such set-points are the result of the CA processing data from the grid. VA1_primary compares the difference between the set-points of the CA and the actual measurement of the smart meter and calculates an error value. VA1_primary broadcasts the error value to all the chargers via cable (for charger 1) and via wireless communication (for chargers 2 to N). The users communicate their inputs via the mobile app to the CA. The CA sends them to the secondary function of each VA, via Wi-Fi communication. Each VA_secondary stores the information from the charger meter and communicates with the PI control and with the switch according to the EV priorities. The power coming from the grid flows through the smart meter to the switches. The switches deliver alternately the power to one of the connected EVs based on the schedule calculated by each VA_secondary. Each VA_secondary would automatically calculate the current SOC based on scheduled charging and user input. The total power demand is continuously recorded by the smart meter.

D. Case Study

For the scope of this paper, the model is tailored to a parking lot scenario. The simulated scenario is a workplace parking lot of the Risø research campus of Technical University of Denmark. The parking lot will house 8 smart chargers with double type-2 plugs for each charger. Each charger can simultaneously charge only one car, even if two cars are plugged in. Each plug can support a maximum current of 16 A (11 kW charging 3 phase or 3.68 kW charging 1 phase). In the unconstrained scenario, the maximum power capacity of the parking lot is therefore 88 kW, while in the constrained charging scenario a fuse limit of 43 kW is chosen. In the latter scenario, the chargers will perform power scheduling and sharing to avoid overloading the fuse. When constructed, the parking lot will be suitable for experimental analysis to validate the results of the simulation and expand the findings to a larger scale.

E. Model assumption and inputs

The model is designed in Matlab/Simulink. The simulation has a total time of 24h, with a variable time-step. The inputs of the model are EV parking behavior data from a real office parking lot and are summarized in Table I. The table shows in the same color the EVs connected to the same charger. The data are provided by a Nissan EV telematics and consist of a dataset containing arrival time, SOC at the beginning of the session, and planned departure time from 16 EV users in a time range of 24 hours with a time resolution of one second. In addition, the simulation incorporates EV models and relative battery capacity. They represent a sample of the most common EVs found in the DTU university campus. Such info is

TABLE I
INPUTS OF THE MODEL FOR THE SIMULATION.

EV num	Model	Charging Phases	Battery_capacity [kWh]	Initial SOC [%]	Connection time [hh:mm]
EV1	Tesla Model 3	3	75	25%	08:47-18:08
EV2	Peugeot iOn	1	14.5	17%	09:31-12:29 14:41-18:00
EV3	Tesla P85D	3	85	33%	08:24-08:52 10:40-17:40
EV4	Nissan LEAF	1	24	50%	08:31-17:12
EV5	Nissan LEAF	1	62	58%	08:36-20:29
EV6	Nissan e-NV200	1	24	67%	08:24-19:25
EV7	Renault Zoe	3	44	50%	07:47-12:15 12:53-16:06 16:24-17:18
EV8	Volkswagen E-golf	1	36	58%	08:15-18:10
EV9	Tesla Model 3	3	75	67%	07:56-18:03
EV10	Nissan LEAF	1	24	92%	10:40-16:23
EV11	Nissan LEAF	1	62	42%	07:25-17:01
EV12	Nissan e-NV200	1	24	33%	07:35-19:55
EV13	Renault Zoe	3	44	33%	00:21-04:00
EV14	Renault Zoe	3	44	75%	08:31-17:12
EV15	Tesla Model 3	3	75	67%	08:55-22:16
EV16	Renault Zoe	3	44	17%	06:28-09:15 11:41-17:06

inputted in the model directly to characterize the EVs, their arrival and departure time. Based on these information the VA schedules their charging time and power. The switch performs scheduling by prioritizing the EVs with lower SOC with schedules of 30% SOC each. The EV models contain a simplified battery model and AC-DC converter efficiency which decreases linearly from 90% at full charge (11 kW for 3 phase charging or 3.68 kW for 1 phase charging) to 80% at minimum charge (4.15 kW for 3 phase charging or 1.38 kW for 1 phase charging) [17]. At the end of each iteration, the power consumed by each charger is recorded on the smart meter. The smart meter will calculate the total power demand of the last iteration for the next iteration cycle. More information about the model's signal discretization and communication delays can be found in [12].

IV. Results

Figure 3 displays the connection and charging time of EVs throughout the day. The y-axis shows the EV number, while the x-axis shows the time in hours. For each EV the dotted line represents the connected time while the continuous line is the actual charging time. The lines of EVs connected to the same charger are shown in the same color. Fig.3 gives a detailed overview of the charging schedule of each EV, and the alternate switching between two EVs plugged on each charger. Further, some EVs reach their maximum SOC and stop charging before leaving. The surplus energy is used to charge the rest of EVs faster. However, the same energy surplus can be used for FTM flexibility services if the other EVs are already charging with maximum capacity.

Fig. 4 provides the overall results of the parking lot simulation during the 24 hours period. The top graph illustrates a time history of the charging power in the constrained charging and unconstrained charging cases for comparison. The bottom graph shows the time history of the number of EVs charging and the number of EVs connected in the constrained charging case. In the unconstrained charging case the peak demand due to concurrent charging is 66

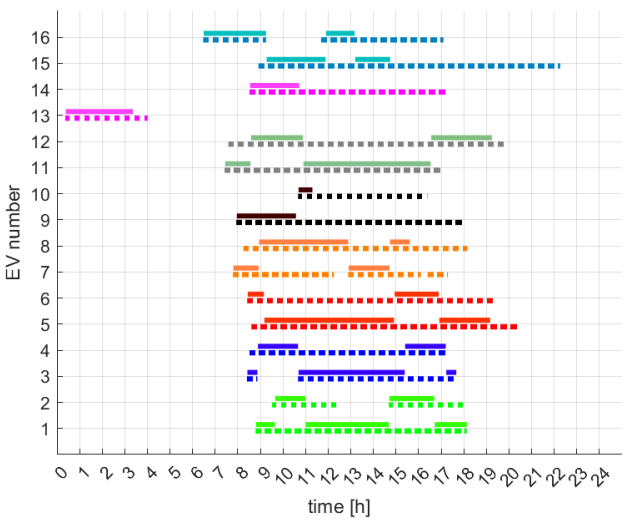

Fig. 3. Connection and charging time history of the simulation.

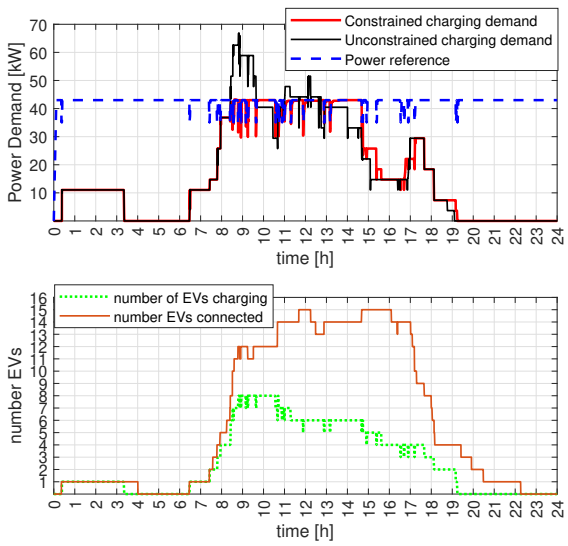

Fig. 4. Overall time history of the total power demand with unconstrained and constrained charging (top). Time history of number of EVs connected and charging (bottom)

kW. However, the bottom graph suggests that 43 kW is an acceptable limit because most of the EVs are fully charged and stop charging long before they leave the parking lot. In fact, after 11:30 am, only 6 cars are charging at the same time.

Table II shows the performance of the charging sessions for the parking lot. In detail, the results are similar for both scenarios: 11 EVs are fully charged by the end of their charging session in the constrained scenario, one less than the unconstrained one. Otherwise, the results are very similar. EV11 has the lowest SOC of 78% in both scenarios. However, EV11 charges in both scenarios to its maximum power while connected, showing that constrained charging does not affect its demand fulfillment. EV11 is a single phase EV with a high battery capacity of 62 kWh and it manages to charge 25 kWh (roughly 125 km). Regarding EVs that do not reach 100% SOC: the minimum amount of energy guaranteed by the parking lot is 12.2 kWh if an EV is parked for at least 5 hours and 54 minutes. Therefore, assuming that EVs drive an average of 5 km per kWh, the parking lot is capable of guaranteeing approximately 61 km of driving autonomy during the simulated day. In addition, six of the eight chargers reach idle state for an average of 4 hours and 19 minutes per charger because their plugged EVs are fully charged. This idle time shows that, in this simulation, the fuse limit could be even lower than 43 kW without a significant effect on vehicle demand fulfillment. However, such time buffer can be used for FTM flexibility services.

Lastly, the parking lot erogates power for 19 hours and 24 minutes over 24 hours. In such time, the total energy output in the constrained charging scenario is 414 kWh, whereas in the unconstrained charging scenario it would instead be 413 kWh. This confirms that the charging bottleneck is the power limit of each charger (11 kW, for 3 phase charging, and 3.68 kW, 1 phase charging) and not the fuse limit. The actual energy stored in the EV batteries

TABLE II

TABLE SHOWING THE MOST RELEVANT SIMULATION OUTPUT PER CAR AND PER CHARGER

		Charger 1		Charger 2		Charger 3		Charger 4		Charger 5		Charger 6		Charger 7		Charger 8	
Idle time constrained	[hh:mm]	00:00		00:00		01:18		02:32		06:46		00:39		07:04		07:30	
Idle time unconstrained	[hh:mm]	00:00		00:00		01:41		03:28		06:55		00:47		08:08		09:30	
		EV1	EV2	EV3	EV4	EV5	EV6	EV7	EV8	EV9	EV10	EV11	EV12	EV13	EV14	EV15	EV16
Charging mode	#	3 phase	1 phase	3 phase	1 phase	1 phase	1 phase	3 phase	1 phase	3 phase	1 phase	1 phase	1 phase	3 phase	3 phase	3 phase	3 phase
Available_time	[hh:mm]	09:18	05:54	07:24	08:36	11:48	00:00	06:42	09:54	10:06	05:42	9.6	12:18	03:36	08:36	13:18	08:12
EV_charging_time	[hh:mm]	05:54	03:18	05:36	03:36	08:00	02:42	02:54	04:48	02:36	00:36	6.7	05:00	03:00	02:12	04:12	04:00
EV_tot_energy_charged_AC (constrained)	[kWh]	59.5	12.2	58.5	13	29.2	8.9	25.6	17.1	28.1	2.2	25	18	32.4	13.3	29.4	41.4
Final SOC unconstrained	[%]	99	98	97	100	100	100	100	100	100	100	78	100	100	100	100	100
Final SOC constrained	[%]	96	92	94	99	100	100	100	100	100	100	78	100	100	100	100	100

is 368 kWh and 373 kWh in the constrained and unconstrained charging scenarios, respectively. This difference is due to the lower AC-DC conversion efficiency of the cars when modulating the charging power. These losses can be minimized by prioritizing power scheduling over power sharing. However, such losses may still be acceptable considering that the system reduces the overloading of the grid and the need to upgrade the connection capacity of the parking lot and components of the distribution grid.

V. CONCLUSION AND FUTURE WORK

This paper illustrates an autonomous distributed control and logic design for coordinating the charge of EVs in a parking lot. The modeled architecture is applied to a 24 hours simulation of an office parking lot scenario with real input data from 16 EVs. Two scenarios are compared: constrained charging (43 kW fuse limit) and unconstrained charging (88 kW is the maximum power that can be supplied by the chargers). The local performance of the parking lot follows: 11 EVs reach maximum SOC in the constrained scenario, one less than the unconstrained one. Otherwise the demand fullfillment performances are similar. EV11 reaches only 78% SOC in both scenarios due to its slow charging capacity. The parking lot guarantees a minimum of 12.2 kWh (roughly 61 km) to each car and has a significant amount of idle time from 6 chargers. This is because most EVs are fully charged before the charging session ends, and the resulting energy buffer can be used for FTM flexibility services or to further reduce the fuse limit. Overall, the architecture schedules the charging of all EVs correctly, starting from the ones with lower SOC. Having two plugs per charger, of which one is functioning at a time, is a convenient way to have more EVs connected without needing a high connection capacity. Prioritizing power scheduling over power sharing and limiting the modulation of the charging power is also important not to lose efficiency in AC-DC energy conversion of the EV. In the future, the model will also be used to investigate phase balancing, by automatically switching 3 phase EVs to 1 phase. Furthermore, the simulated EV parking lot scenario will be constructed and used to validate the results.

ACKNOWLEDGMENT

The work in this paper is supported by the research projects ACDC (EUDP grant number: 64019-0541) and FUSE (EUDP grant number: 64020-1092). Website: www.acdc-bornholm.eu and www.fuse-project.dk

REFERENCES

[1] International Energy Agency, "Global ev outlook: Entering the decade of electric drive," tech. rep., 2020.

[2] M. Muratori, "Impact of uncoordinated plug-in electric vehicle charging on residential power demand," *Nature Energy*, vol. 3, pp. 193–201, 3 2018.

[3] L. Calearo, A. Thingvad, K. Suzuki, and M. Marinelli, "Grid loading due to ev charging profiles based on pseudo-real driving pattern and user behavior," *IEEE Transactions on Transportation Electrification*, vol. 5, pp. 683–694, 2019.

[4] M. Z. Degefa, I. B. Sperstad, and H. Sæle, "Comprehensive classifications and characterizations of power system flexibility resources," *Electric Power Systems Research*, vol. 194, no. January, p. 107022, 2021.

[5] C. Crozier, T. Morstyn, and M. McCulloch, "The opportunity for smart charging to mitigate the impact of electric vehicles on transmission and distribution systems," *Applied Energy*, vol. 268, no. March, p. 114973, 2020.

[6] M. Resch, J. Buhler, B. Schachler, and A. Sumper, "Techno-Economic Assessment of Flexibility Options Versus Grid Expansion in Distribution Grids," *IEEE Transactions on Power Systems*, vol. 36, no. 5, pp. 3830–3839, 2021.

[7] F. G. Venegas, M. Petit, and Y. Perez, "Active integration of electric vehicles into distribution grids: Barriers and frameworks for flexibility services," *Renewable and Sustainable Energy Reviews*, vol. 145, p. 111060, 7 2021.

[8] H. S. Das, M. M. Rahman, S. Li, and C. W. Tan, "Electric vehicles standards, charging infrastructure, and impact on grid integration: A technological review," *Renewable and Sustainable Energy Reviews*, vol. 120, 3 2020.

[9] M. Marinelli et al., "Electric vehicles demonstration projects - an overview across europe," *2020 55th International Universities Power Engineering Conference (UPEC)*, pp. 1–6, 2020.

[10] L. Calearo, M. Marinelli, and C. Ziras, "A review of data sources for electric vehicle integration studies," *Renewable and Sustainable Energy Reviews*, vol. 151, no. December 2020, 2021.

[11] S. Striani, K. Sevdari, L. Calearo, P. B. Andersen, and M. Marinelli, "Barriers and solutions for evs integration in the distribution grid," *UPEC 2021 56th International Universities Power Engineering Conference*, 2021.

[12] K. Sevdari, L. Calearo, S. Striani, P. B. Andersen, M. Marinelli, and L. Rønnow, "Autonomously distributed control of electric vehicle chargers for grid services," in *2021 IEEE PES Innovative Smart Grid Technologies Europe (ISGT Europe)*, pp. 1–5, IEEE, 2021.

[13] J. García-Villalobos, I. Zamora, J. I. S. Martín, F. J. Asensio, and V. Aperribay, "Plug-in electric vehicles in electric distribution networks: A review of smart charging approaches," *Renewable and Sustainable Energy Reviews*, vol. 38, pp. 717–731, 2014.

[14] X. Han, K. Heussen, O. Gehrke, H. W. Bindner, and B. Kroposki, "Taxonomy for evaluation of distributed control strategies for distributed energy resources," *IEEE Transactions on Smart Grid*, vol. 9, pp. 5185–5195, 9 2018.

[15] K. Sevdari, L. Calearo, P. Bach, and M. Marinelli, "Ancillary services and electric vehicles : an overview from charging clusters and chargers technology perspectives," *Renewable & Sustainable Energy Reviews*, vol. under-review, 2022.

[16] "Automated distributed electric vehicle controller for residential demand side management," *IEEE Industry Applications Society Annual Meeting, IAS*.

[17] L. Calearo, C. Ziras, K. Sevdari, and M. Marinelli, "Comparison of smart charging and battery energy storage system for a pv prosumer with an ev," in *2021 IEEE PES Innovative Smart Grid Technologies Europe (ISGT Europe)*, pp. 1–6, IEEE, 2021.