Black-start of microgrids: Insights based on demonstration sites in Europe and India

Nuhic, Mirza; Paspatis, Alexandros; Shahare, Kamini

Published in:
Proceedings of 2023 IEEE PES ISTG Europe

Link to article, DOI:
10.1109/ISGTEUROPE56780.2023.10407130

Publication date:
2024

Document Version
Peer reviewed version

Black-start of microgrids: Insights based on demonstration sites in Europe and India

Mirza Nuhic
Wind and Energy Systems
DTU
Kgs. Lyngby, Denmark
mirnuh@dtu.dk

Alexandros Paspatis
Electrical and Computer Engineering
NTUA
Athens, Greece
agpaspatis@mail.ntua.gr

Kamini Shahare
Electrical Engineering
VNIT
Nagpur, India
kaminishahare09@gmail.com

***Abstract*—This paper provides an insight into power system restoration on a small scale, where the distributed generation in microgrids is used to facilitate black-start strategies to provide faster and efficient power restoration. The idea was to employ non-conventional and renewable generation for black-start provision in microgrids with implementation of grid-forming strategies and control coordination. Both AC and DC microgrids, operating in grid-connected and islanded modes, were considered in this work and exemplified on three study cases based on the demonstration sites of the Re-Empowered project (locations in Denmark, Greece and India). Case studies include a larger system in Bornholm, where the network was sectionalized into two smaller microgrids and subsequently established simultaneously, before being synchronized and interconnected. Two additional studies are based on a smaller scale AC and DC islanded microgrids, where different methods for black-start were considered.**

***Index Terms*—Black-start, grid-forming converters, microgrid sectionalization, microgrid synchronization, DC micgrogrids**

I. Introduction

The transition of power systems towards renewable and converter interfaced generation implies increased installations of small distributed generation. This means that the conventional power restoration strategies need to be revised and adjusted to the new paradigm. Distributed generation provides a possibility to restore the grid in a faster, safer and more effective way. Conventional power restoration process can be divided into three stages: a preparation stage (where the system is evaluated, a target system is specified and restoration strategy is chosen), the actual system restoration (establishing voltage and frequency by energizing the system, eventual islands are re-synchronized and critical loads restored), and finally the full load restoration and establishment of the entire system [1]. In the context of microgrids, the power restoration process is provisioned either using the conventional strategies, which includes grid connected mode and central power restoration, or mode based on islanded operation, where the system is restored in parallel by splitting it in several zones or sections [2]. Furthermore, there are also two basic methods of grid energization, namely, the hard start method, which includes energizing the network at 90% of nominal voltage and a soft start method, where voltage is increased gradually from 0 to 100%.

Authors in [3] proposed a method for microgrid sectionalization, where each section is energized at the same time. Initial energization is performed by diesel generatiors, while the renewable sources are synchronized and connected subsequently. In [4], the authors implemented a current limitation strategy for transformer inrush current for improved management of the energization procedure. In [5], a battery energy storage system (BESS) is used to energize the grid and operate a small load in islanded mode. The BESS is equipped with grid-forming capabilities and both previously mentioned energization methods are considered. In [6], the grid is sectionalized and energized separately, and each section has sufficient number of units with grid-forming and black-start capabilities to restore the power and operate independently as smaller microgrids.

In [7], grid-forming converters are used for black-start purposes, while the grid-following converters are treated as uncontrollable loads. IED capable switches are employed for grid sectionalization and to define the borders between sections. During the procedure of power restoration, the system will be comprised of several dynamic microgrids, where the boundaries would vary depending on the requirements of the system operator. In [8], a grid-forming BESS is used to energize an offshore wind farm in several steps: 1. Energizing the wind farm (soft start strategy); 2. Connecting individual wind turbines; 3. Connecting the block load, making the island establishment procedure finalized. Black-start trials were done in United Kingdom, where they employed distributed energy resources (DERs) for power restoration in smaller sections of the grid [9]. In one of the trails, a hydro generator was used to energize the section with assistance from two wind farms. The results have shown that a single hydro generator was able to energize all primary transformers, pick up block loads while maintaining the frequency within acceptable range. They also managed to energize wind farm cables and transformers and connect wind farms to this weak islanded network, while maintaining stable operation in different control modes. The trials have also demonstrated a black-start service provision from grid-forming power converters, applying a soft-start voltage build-up strategy.

The rest of the paper is organized as follows. In Section II, an overview of control strategy needed for power system restoration and methods for grid synchronization. Simulation results for the three demo-sites are given in Section III, which

is followed by conclusions drawn from this work in Section IV.

II. Converter Control Strategies in the Context of Power Restoration

In scenarios of wide system blackouts, microgrids can continue to operate in islanded mode and provide power to critical loads, and possibly supply the complete load profile providing there is enough generation to balance the network. In order to be able to operate in islanded mode, a microgrid needs either synchronous or grid-forming converter interfaced generation. Additionally, synchronous generators and/or grid-forming converters can contribute to overall power restoration strategy by energizing and establishing islands in parallel. There are three main requirements when it comes to provision of power restoration services: ability to self-start and operate in islanded mode (synchronous generation or grid-forming control strategy), energize the network and balance the load, and finally synchronize to the main grid [10].

A. Grid-Forming Converter Control

For a microgrid to operate in islanded mode and be capable of restoring the system in case of a blackout, it needs to have a synchronous machine or grid-forming converter that sets the voltage and frequency reference. There are several different implementations of grid-forming control strategies and one of the most common ones is virtual synchronous machine, which is based on the implementation of swing equation and without the inner current controller [11]. The swing equation can be written as:

$$2H\frac{d\omega_{VSM}}{dt} \approx p_{ref} - p_{meas} - k_d(\omega_{VSM} - \omega_{grid}) \quad (1)$$

where H is the inertia constant, ω_{VSM} represents the angular frequency of the VSM, ω_{grid} is the grid angular frequency, p_{meas} and p_{ref} are the measured and reference active power, respectively, k_d is the damping factor. The block diagram of active power loop of grid-forming controller is shown in Fig. 1.

Current limitation implementation is one of the challenges with grid-forming converter control. There are several methods to resolve this: peak current shaving/clipping, virtual impedance method and limiting voltage drop over series impedance of the converter. The virtual impedance based

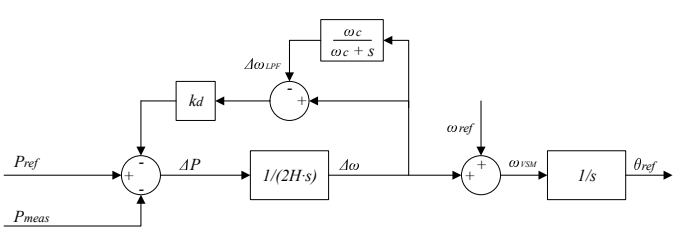

Fig. 1. Block Diagram of a Virtual Synchronous Machine

method modifies the voltage reference (voltage set-point coming from the VSM controller) by subtracting the voltage drop over the virtual impedance as given by the following equation:

$$u_{ref-vi-lim} = u_{ref-unlim} - i_{conv} * (r_v + jx_v) \quad (2)$$

where $u_{ref-unlim}$ is the voltage reference as obtained from the VSM controller, i_{conv} is the measured converter current, r_v and x_v are virtual resistance and reactance, while $u_{ref-vi-lim}$ represents the limited voltage reference. The virtual impedance can be made automatically adjustable by introducing a proportional parameters, as shown in the following equation:

$$z_{vi} = \begin{cases} r_{vi} + jx_{vi}, & |i_{conv}| \leq i_{max} \\ (k_{pr}r_{vi} + jk_{px}x_{vi})(|i_{conv}| - i_{max}), & |i_{conv}| > i_{max} \end{cases} \quad (3)$$

The other method is based on the maximum voltage drop over the series impedance of the converter, which can be calculated as:

$$\Delta u_{drop-max} = i_{max}(r_s + jx_s) \quad (4)$$

where i_{max} is the maximum current of the converter, while r_s and x_s are series resistance and reactance. The actual voltage drop over the series impedance of the converter Δu_{drop} is calculated as:

$$\begin{cases} \Delta u_{drop-lim} = u_{conv-unlim} - u_{term} \\ 0 \leq \Delta u_{drop-lim} \leq \Delta u_{drop-max} \end{cases} \quad (5)$$

where u_{conv} and u_{term} represent the unlimited voltage before and after the series reactance. Finally, the limited converter voltage is calculated as:

$$u_{conv-lim} = \Delta u_{drop-lim} + u_{term} \quad (6)$$

B. Microgrid Synchronization

Splitting the grid into sections means that the sections need to be synchronized again before re-connection. Synchronization procedure includes bringing the voltage level, phase angle and frequency in two sections as close as possible before making the connection in order to reduce transients. There are two common methods for phase angle synchronization: by increasing or reducing the frequency by a small margin in one section (intentionally creating a small difference in frequency between two sections), the voltage phase angle difference will change as well, and once it reaches a predetermined value of ϵ_θ, we can connect the two sections. The key here is to create a small difference in frequency so as not to create undesirable transient and power surge from one section to another. Another method is to use grid-forming converter to change the phase angle remotely at the interconnection point. The voltage level can be equalized by changing the voltage set-points of voltage-controlling elements and it can be done in both sections simultaneously depending on how large is the voltage level difference. Once both conditions are fulfilled, the

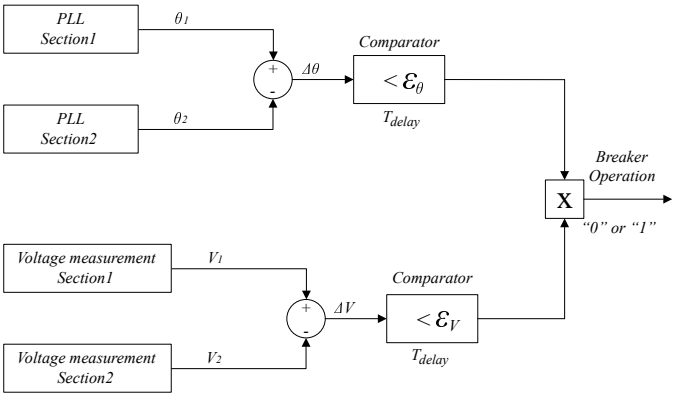

Fig. 2. Block Diagram of a Synchronization Module

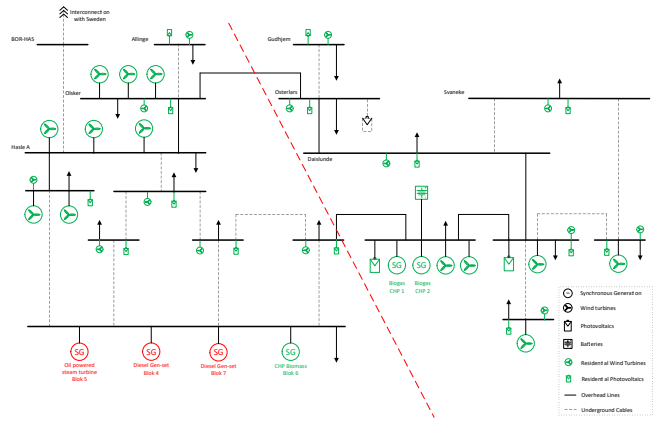

Fig. 3. Single Line Diagram of the Borhnolm Power System

re-connection can be made. Block diagram of the module for synchronization check is shown in Fig. 2.

III. Case Studies

RE-EMPOWERED is a Horizon 2020 (European Commission) and Department of Science & Technology (India) project focusing on developing sustainable and resilient microgrids to empower remote areas and islands [12]. The demo sites of the project are located in Greece (Kythnos island), Denmark (Bornholm island) and India (Keonjhar district and Ghoramara island) and three of them were used as inspiration for case studies in this paper.

A. Bornholm

Bornholm distribution system operates at three voltage levels: 60kV, 10kV and 0.4kV. It is connected to mainland Sweden via 43km long sea cable rated at 60 MVA. The system can operate in islanded mode and this usually happens when there is maintenance on the interconnection or when fault occurs. The generation profile is mix of conventional (one 25MW oil-powered steam generator and two blocks of diesel generators with a total rating of 33MW) and non-conventional units (combined heat and power plant 16MW, two biogas units rated at 1.5MW each, 37MW of installed wind, 23MW of installed solar, and 1MW battery). When the system is operated in islanded mode, renewable generation is disconnected and only synchronous generation is operational. The idea of this case study is to investigate the possibility of power restoration and system operation by using only non-conventional generation including the renewables. Single line diagram of the network is given in Fig. 3.

Wind turbines connected to the same bus are aggregated, while residential PV and wind generation is not considered. The system is split into two sections, eastern and western section (note the red line in Fig. 3) and they are chosen based on the availability of black-start elements and the critical load that needs to be served. The main reason behind the sectionalization is the acceleration of power restoration and reduction of stress on equipment due to large transformer inrush currents and high harmonic content of the energizing currents. The steps followed for power restoration are given as the following. 1.) Borhnolm power system is disconnected from the main grid following a blackout and split into two sections. 2.) The two sections are energized simultaneously using the resources available (grid-forming battery system in the eastern section implementing the soft-start method, and CHP generation in the western section where the energization was performed at 0.75 pu voltage to reduce inrush currents and prevent possible tripping of the generating unit). 3.) Block loads connected in both sections to increase damping and reduce harmonics. 4.) As soon as the system reaches a stable operating point, other generating units are brought online, mainly wind turbines. 5.) Critical loads connected in steps. 6.) Synchronization of the sections and re-connection. 7.) Additional renewable generating units connected as well as the loads. 8.) Once the steady state is reached, the Bornholm power system is synchronized and re-connected with the main grid.

Following these steps, a simulation model built in DIgSILENT PowerFactory has been used to demonstrate the effectiveness of the power restoration procedure. The central

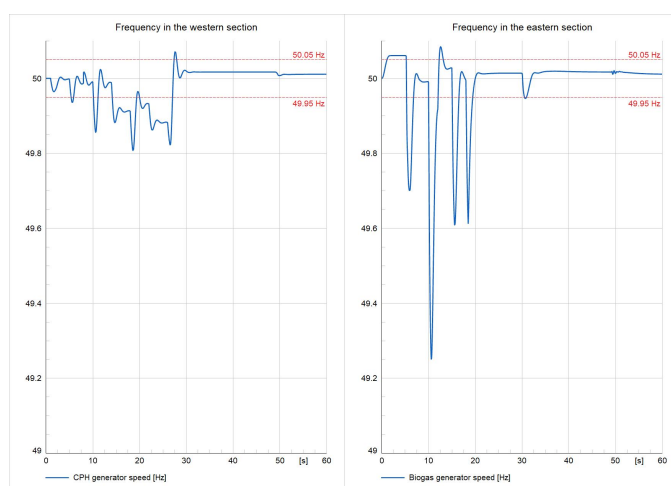

Fig. 4. Frequency in both Sections during the Power Restoration Procedure

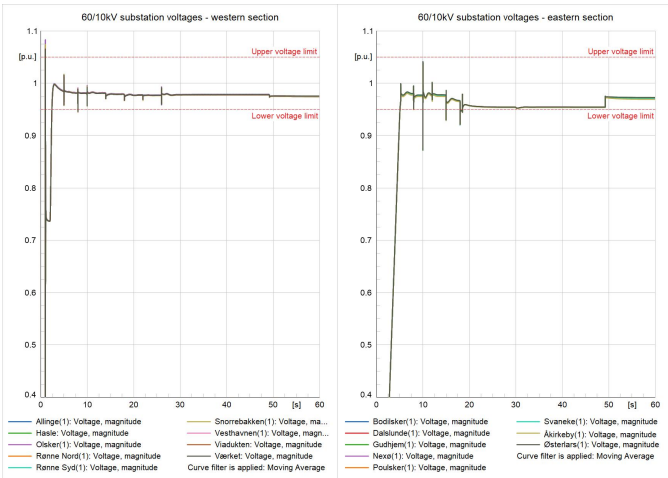

Fig. 5. Bus Voltages in both Sections during the Power Restoration Procedure

substation in the western section is in the city of Rønne. The large CHP generator and all conventional units are connected via this substation. In the eastern section, the central substation that connects three 2.5MW wind turbines, 7.5MW solar plant, two biogas generators and BESS, is located close to city of Åkirkeby. Fig. 4 shows the frequency measured in the western and eastern section during the entire black-start sequence. The energization of the sections starts after 1 second of simulation and it is simultaneous. The western section is energized at 0.75 pu of voltage by the CHP generator, while in the eastern section a soft start method was used and voltage was increased from 0 to 1 pu in about 4 seconds. In the eastern section, two biogas generators are connected to support power restoration (starting at 5 seconds). Critical loads are connected in steps, exemplified by frequency dips as shown in Fig. 4. After 20 seconds, two larger wind turbines (>2MW) are connected in both sections in order to be able to connect more loads to the networks. The generating units are re-dispatched following a load disturbance in order to bring the frequency back to the nominal range. The voltage level in both sections is maintained within normal operating range with slightly larger dips in the eastern section as it is a weaker system in comparison to the western sections, as shown in Fig. 5. Larger frequency dips in the eastern section indicate lower inertia levels in that part of the system, and considering the previous two facts, it would be advisable to connect larger loads after the two systems are re-connected.

The synchronization procedure is activated after 30 seconds of simulation. The phase angle at the interconnection points (Olsker and Rønne Syd substations) is controlled by the BESS system, while the voltage is adjusted globally in the eastern section by all generating units. Once the phase angle and voltage level difference between the two sections is reduced below the predefined thresholds (0.5 degrees for phase angle and 0.025 pu for voltage), the re-connection is made, approximately 49 seconds into the simulation, as shown in Fig. 4 and Fig. 5. After the grid has been established and all loads and generating units have been integrated into the system, a re-connection to the main grid is made (using the same method as for section synchronization and re-connection).

B. Ghoramara

Due to geographical or economic considerations, such as those on islands, it might be challenging to connect to the main power grid in some places. One of such islands is Ghoramara Island situated 92 km south of Kolkata, in the Sundarban of the Bay of Bengal, India. It is an isolated island roughly around five square kilometers in area with a population of 3,000 residents and 1100 houses. At present there is no electricity in this village. The one way to supply power to such locations is stand-alone microgrid, a small-scale power system that is not linked to a utility grid and may deliver electricity locally via distributed generators (DGs). Hence, a stand-alone DC Microgrid of 20kW is going to be installed in this Ghoramara Island to provide electricity to local consumer for domestic, commercial and agriculture purpose. The DC microgrid consist of 15kW PV generator, 5kW Wind Turbine along with battery energy storage system (BESS). Due to environmental factors like weather, it is particularly challenging to supply power to loads consistently and stably when using a standalone microgrid, which uses only renewable energy sources. Therefore, battery energy storage systems (BESS) is an important element for such microgrids.

Now-a-days, the use of DC microgrids is growing every day, however there are several challenges that need to be addressed. These problems can be related to faults, lightening strikes, natural disasters and equipment failures which leads to black out. Because blackouts have a substantial influence on daily lives, it is crucial to swiftly and reliably restore the electrical system when one happens. The restoration of the system depends on different methods like fault type, voltage level and generators. In this study, the voltage level type restoration process is analysed. After a blackout, a complete system restoration requires suitable restoration plans, practise exercises, verification, and specialised expertise and experience. In this case study a black start strategy for a standalone DC microgrid is considered which depends on the state of charge (SOC) of the battery energy system. The different results for voltage and power is analyzed using MTALAB/Simulink software.

Fig. 6 shows the schematic arrangement of DC microgrid with renewable sources such as photovoltaic (PV) source, Wind Turbine along with battery and connected to the DC loads. The ESS must be operational at all times in order to maintain the DC bus voltage, which is necessary to maintain the DC microgrid's voltage. All the renewable sources are controlled using MPPT control scheme.

The system consist of various controller such as PV controller consisting of PV system connected to DC/DC converter to supply the DC voltage amplitude. This DC/DC boost converter controls the MPPT current and thus maintain a stable reference voltage. A permanent magnet synchronous generator (PMSG) that can adjust speed for varying wind speeds makes

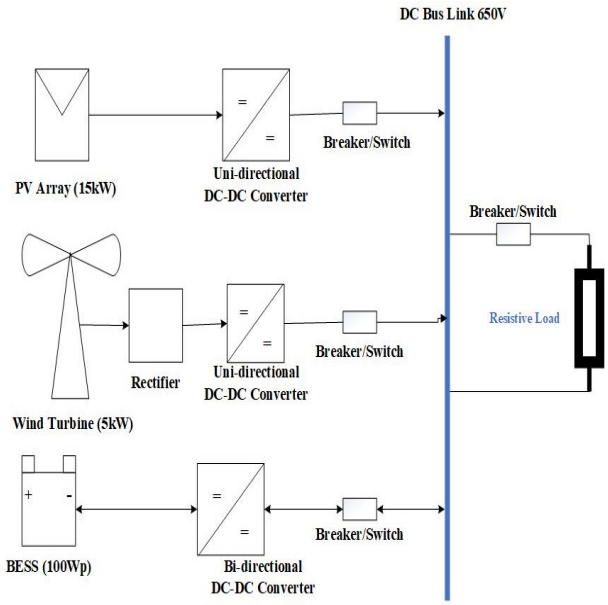

Fig. 6. Schematic Arrangement of DC Micro-grid at Ghoramara Island

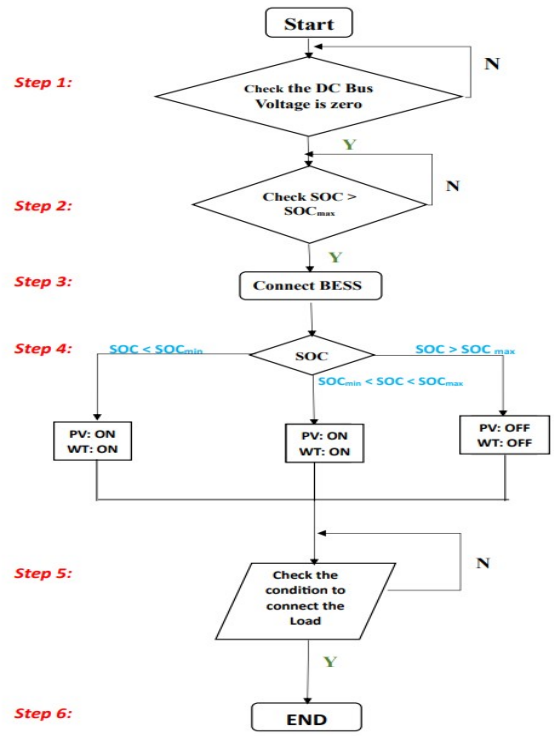

Fig. 7. Flow Chart for the Black Strategy for Ghoramara Island

up the WP generator.When the generated power is less than the load power, the BESS must regulate the voltage of the DC bus. In discharge mode, it sends the battery's stored energy to the load. The bi-directional DC/DC converter is used for both charging and discharging of battery. In this case study for black start strategy, except when SOC is greater than maximum SOC rate, the BESS is connected to perform voltage control of the DC Bus. The PV, WT, and load are then connected in proper order. If SOC is greater than maximum SOC rate, only ESS operates. The flowchart of such a black start strategy is presented in Fig. 7 and same procedure is followed for the black start strategy.

In order to observe the study practically, a simulation was carried out for three cases using MATLAB/Simulink software. Case 1: $SOC \leq SOCmin$, in which the SOC of battery is lower than its rated. In this case, PV and Wind are to provide power to the load, while the battery is in charging mode. The DC bus voltage is maintained at 650V. Case 2: $SOCmin \leq SOC \leq SOCmax$, this is the steady state range of SOC. This is similar to Case 1, but initially the SOC of the battery is on steady state to maintain the DC bus voltage. Case 3: $SOC \geq SOCmax$. When the black out occurs, all generators stop working and the dc bus voltage is reduced drastically. To maintain the voltage and deliver power to the load, BESS, which is connected to the DC bus, is the primary source. Depending on the SOC condition, the renewable sources are connected in step wise manner.

C. Gaidouromandra

Gaidourmandra is a microgrid located in the island of Kythnos, Greece, which is already operating for more than 20 years. The purpose of the microgrid was to electrify some vacation homes in the Gaidouromandra valley, with the latter being far from the distribution system of the island. Therefore, the microgrid has been operating in islanded mode until today. Today, the microgrid consists of several grid-following inverters interfacing the PV panels located on the rooftop of most of the houses, while a grid-forming BESS system and a back-up diesel generator are located in the so-call "system house", where protection and control circuits are also installed.

With regards to the black start of the microgrid, the grid-forming BESS system and the backup diesel generator can govern such procedures. In fact, this operation is appropriately governed by the existing control schemes of those units, with the diesel generator restoring the microgird operation when the SoC of the BESS is low. Therefore, for this case study, a futuristic scenario will be investigated, where the microgrid is capable to operate either in grid-connected or islanded mode, and is particularly capable of switching to the islanded when grid faults occur in the distribution system of the island, aiming to eliminate the need for black start.

As shown in Fig. 8, two main elements are responsible for the proper operation of the case study under discussion, i.e., the static transfer switch (STS) and the switch between the different control modes of the BESS inverter (Ctrl Mod). In fact, when STS is open, Ctrl Mod should be switched to the GFM control operation, while, when STS closes, GFL control operation should be enabled in the BESS inverter. Finally, the resetting of the local frequency control of the GFM inverter should take also place when switching from GFL to the GFM operation of the BESS inverter.

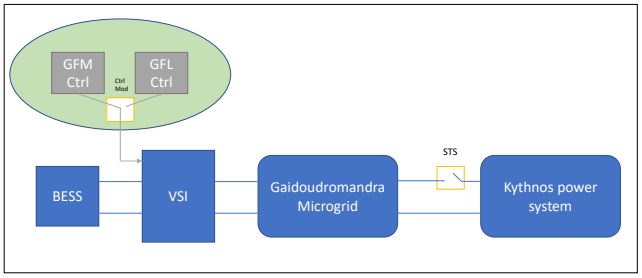

Fig. 8. Topology of the Gaidroumandra microgrid for the case study

To verify the proposed approach, simulation results are obtained using the MATLAB/Simulink environment. The scenario of this study is as follows: The Gaidouromantra microgrid initially operates at the grid-connected mode. While in grid-connected mode, both the PV and the BESS inverters operate in grid-following mode and regulate their output power to some setpoints obtained my the MPPT of the PVs and the charging strategy of the BESS. However, at some point (0.25s), a grid fault occurs at the Kythnos power system. To avoid black out and the correspond need for black start, it is assumed that the microgrid central controller sends a command to the BESS inverter to switch to grid-forming mode and switches the microgrid to islanded operation, along with the relevant command to static transfer switch (STS), at 0.27s. The corresponding results for the system house voltage, system house current and grid current are provided in Fig. 9.

As evident in Fig. 9, the smooth mode transition of the Gaidouromandra microgrid is properly achieved based on the designed approach, with the microgrid continuing its normal operation under permanent faults in the distribution system. Particularly, as shown in Fig. 9(upper), the grid-forming inverter is successfully controlling the voltage and frequency of the islanded system to its nominal values, while the current provision by the BESS is appropriately modified to maintan power balance in the islanded microgrid.

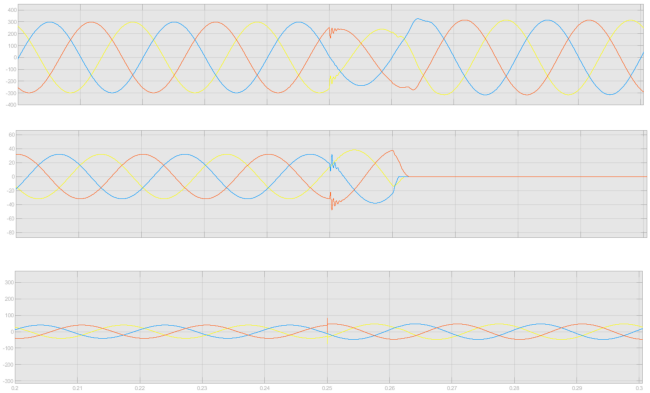

Fig. 9. Results for the Gaidouromandra case study

IV. Conclusions

Black-start of inverter-based microgrids and insular power systems has evolved into an interesting research topic, due to the emergence of demand for resilient power supply, even in geographically remote areas. In this regard, the present paper has presented case studies based on demonstration sites in Europe and India. Particularly, such case studies have been performed as part of the RE-EMPOWERED Horizon 2020 project. It has been demonstrated that distributed renewable generation can contribute significantly in reducing the impact of blackouts and bringing the system or parts of the system online as soon as possible.

Acknowledgment

This work was financially supported by the European Union's Horizon 2020 Research and Innovation Program and the Department of Science and Technology (DST), India through the RE-EMPOWERED Project under Grant Agreement No 101018420 and DST/TMD/INDIA/EU/ILES/2020/50(c) respectively.

References

[1] L. H. Fink, K. L. Liou, and C. C. Liu, "From generic restoration actions to specific restoration strategies," IEEE Trans. Power Syst., vol. 10, no. 2, pp. 745–751, 1995.

[2] J. Wang, L. Mu, F. Zhang, and X. Zhang, "A parallel restoration for black start of microgrids considering characteristics of distributed generations," Energies, vol. 11, no. 1, p. 1, 2018, doi: 10.3390/en11010001.

[3] F. . Resende, N. J. Gil, and J. A. P. Lopes, "Service restoration on distribution systems using Multi-Microgrids," Eur. Trans. Electr. Power, vol. 21, no. 2, pp. 1327–1342, 2011, doi: 10.1002/etep.404.

[4] M. Shahparasti, H. Laaksonen, K. Kauhaniemi, P. Lauttamus, S. Strandberg, and J. Strandberg, "Inrush Current Management During Medium Voltage Microgrid Black Start With Battery Energy Storage System," IEEE Access, vol. 10, pp. 42273–42282, 2022, doi: 10.1109/ACCESS.2022.3167701.

[5] J. Marchgraber and W. Gawlik, "Investigation of black-starting and islanding capabilities of a battery energy storage system supplying a microgrid consisting of wind turbines, impedance, and motor-loads," Energies, vol. 13, no. 19, p. 5170, 2020, doi: 10.3390/EN13195170.

[6] S. M. I. Muyeen, S. M. Blaab erg, and Frede, "Variability, Scalability and Stability of Microgrids - References," in Institution of Engineering and Technology (The IET, 2019.

[7] Du, Yuhua, et al. "Black-Start and Service Restoration in Resilient Distribution Systems with Dynamic Microgrids." IEEE Journal of Emerging and Selected Topics in Power Electronics, vol. 10, no. 4, Institute of Electrical and Electronics Engineers Inc., 2021, pp. 3975–86, doi:10.1109/JESTPE.2021.3071765.

[8] D. Pagnani, L. Kocewiak, J. Hjerrild, F. Blaabjerg, and C. L. Bak, Integrating Black Start Capabilities into Offshore Wind Farms by Grid-Forming Batteries. IET Renewable Power Generation, 2022.

[9] Demonstration of black start from DERs – Live TRials Report, December 2021, Distributed Restart Project. National Grid ESO UK.

[10] Fan, Fulin, et al. "Wind-Plus-Battery System Optimisation for Frequency Response Service: The UK Perspective." Electric Power Systems Research, vol. 211, Elsevier Ltd, 2022, p. 108400, doi:10.1016/j.epsr.2022.108400.

[11] Wang, Xiongfei, et al. "Virtual-Impedance-Based Control for Voltage-Source and Current-Source Converters." IEEE Transactions on Power Electronics, vol. 30, no. 12, Institute of Electrical and Electronics Engineers Inc., 2015, p. 6990631, doi:10.1109/TPEL.2014.2382565

[12] P. Kotsampopoulos et al., "EU-India Collaboration for Smarter Microgrids: RE-EMPOWERED project," 2022 IEEE PES Innovative Smart Grid Technologies Conference Europe (ISGT-Europe), Novi Sad, Serbia, 2022, pp. 1-6, doi: 10.1109/ISGT-Europe54678.2022.9960371.