Downloaded from orbit.dtu.dk on: Apr 26, 2024

DTU Library

Pilot tone modulation used for channel identification in OTDM networks

Clausen, Anders; Bennike, Jon; Oxenløwe, Leif Katsuo; Seoane, Jorge; Siahlo, Andrei; Jeppesen, Palle

Published in:
Technical Digest Conference on Lasers and Electro-Optics 2004

Publication date:
2004

Document Version
Publisher's PDF, also known as Version of record

Link back to DTU Orbit

Citation (APA):
Clausen, A., Bennike, J., Oxenløwe, L. K., Seoane, J., Siahlo, A., & Jeppesen, P. (2004). Pilot tone modulation used for channel identification in OTDM networks. In *Technical Digest Conference on Lasers and Electro-Optics 2004* (Vol. 2, pp. CThQ7). IEEE.

General rights
Copyright and moral rights for the publications made accessible in the public portal are retained by the authors and/or other copyright owners and it is a condition of accessing publications that users recognise and abide by the legal requirements associated with these rights.

- Users may download and print one copy of any publication from the public portal for the purpose of private study or research.
- You may not further distribute the material or use it for any profit-making activity or commercial gain
- You may freely distribute the URL identifying the publication in the public portal

If you believe that this document breaches copyright please contact us providing details, and we will remove access to the work immediately and investigate your claim.

Pilot tone modulation used for channel identification in OTDM networks

A. T. Clausen, J. Bennike, L.K. Oxenløwe, J. Seoane, A.I. Siahlo and P. Jeppesen
COM Center, Technical University of Denmark, Building 345V, DK-2800 Lyngby, Denmark
Phone: +45 45253779, Fax: +45 45936581, E-mail: atc@com.dtu.dk

Abstract: The principle of applying a pilot tone to an OTDM signal, in order to identify a specific channel, is presented. The impact on BER system performance is characterised as function of modulation index.
©2000 Optical Society of America
OCIS codes: (060.2360) Fiber optics links and subsystems; (060.4250) Networks; (060.4510) Optical Communications

1. Introduction

Optical Time Division Multiplexed (OTDM) techniques can increase the utilised capacity [1], [2]. In order to evolve the OTDM technique from point-to-point transmission to networks, a vital functionality is to add and drop time channels in different nodes of the network. Previously, add-drop nodes have been demonstrated see e.g. [3]. However, one issue has not been addressed in details yet – the identification of the time channel which should be dropped in the node.

2. Principle of scheme

The principle is shown in Figure 1. One of the OTDM channels is Amplitude Modulated with a low frequent (f_p) pilot tone (PT) before transmission. In the node, the base rate clock is extracted and used for (complementary) demultiplexing. A branch of the demultiplexed signal is injected into the PT detector (PTD). Within the PTD, the electrical power of the PT is measured. If no PT is present, the control logic will sweep the tuneable delay between clock and demux to the next OTDM channel. This process will be repeated until the PT channel, i.e. channel 1, is identified. Now the target channel for the node can be identified, e.g. channel 3, and dropped. The control logic is subsequently used to control the time delay used to position the add channel in time to the complementary demultiplexed signal. At the output of the node the OTDM signal is re-transmitted.

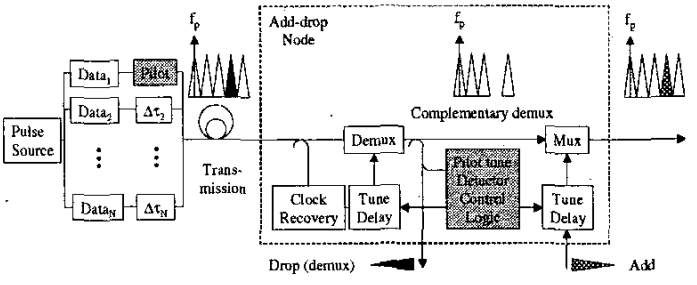

Figure 1: Schematic set-up for channel identification based on pilot tone detection. The system consist of transmitter, transmission and an add-drop node

3. Experimental characterisation

The experimental set-up is shown in Figure 2A. A 10 GHz pulse train is externally 2^{31}-1 PRBS modulated. An additional modulator is used to apply the AM PT. The frequency of the PT should be higher than the EDFAs cut-off frequency [4], here chosen to 45 MHz. The 10 Gbit/s signal is detected using a standard pre-amplified 10 Gbit/s receiver for varied PT modulation index m. From Figure 2B it is seen that even for m of 0.27, which gives a significant PT frequency component, see Fig 2C, only 1.5 dB power penalty is introduced.

Authorized licensed use limited to: Danmarks Tekniske Informationscenter. Downloaded on February 17,2010 at 05:25:07 EST from IEEE Xplore. Restrictions apply.

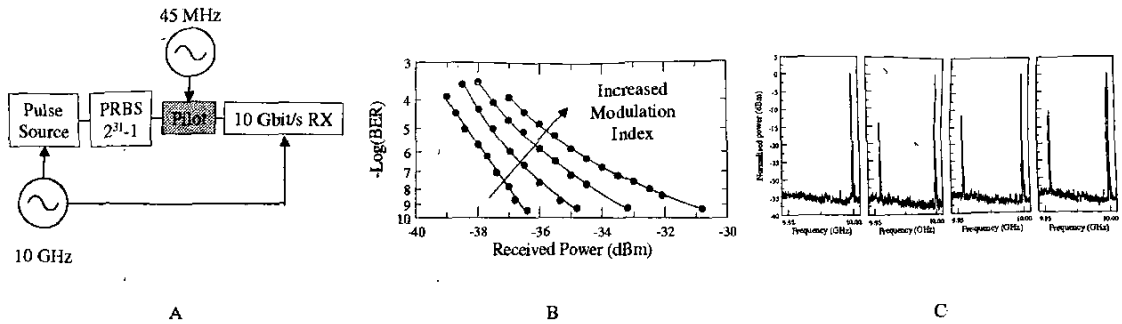

Figure 2: A) Experimental set-up B) BER measurements for increasing modulation index, i.e. 0.00, 0.27, 0.35 and 0.41.

C) corresponding electrical spectra showing the PT power .

In order to implement a reliable pilot tone detector, it is important to obtain a significant contrast in PT power when demultiplexing the PT modulated channel and when demultiplexing the other OTDM channels, typically determined by the extinction ratio of the demux. For illustration, the set-up in Figure 3A was implemented. The PRBS modulated data signal was split into two arms. One of the signals was AM modulated and delayed 50 ps before the two signals were multiplexed, generating a 20 Gbit/s data signal. By tuning the clock applied to the Electro Absorption Modulator (EAM) in time, and measuring the power of the PT, a contrast of 18 dB is obtained, see Figure 3B.

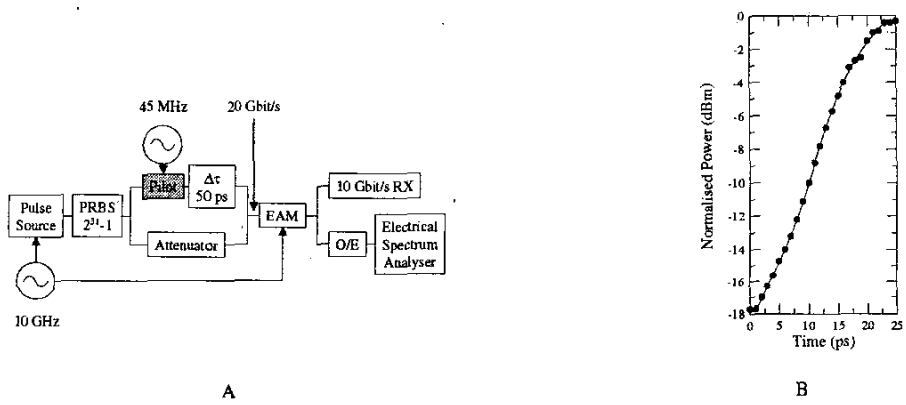

Figure 3: A) Experimental set-up B) Measured contrast by tuning the time delay controlling the position of the demultiplexing window.

4. Conclusion

A novel scheme used for identifying OTDM channels is proposed. The impact on the system performance was characterised by measuring the BER for varied m. For m = 0.27, the penalty is ~ 1.5 dB. The contrast in pilot tone power between the modulated channel and the remaining OTDM channels is measured to 18 dB – sufficient for the control electronics.

5. References

1. M. Nakazawa, T. Yamamoto, K.R. Tamura, "1.28Tbit/s-70km OTDM transmission using third- and fourth-order simultaneous dispersion compensation with a phase modulator," Electron. Lett. **36** (24), page 2027-2029 (2000).
2. European IST project TOPRATE IST-2000-28657
3. C. Schubert, C. Schmidt, S. Ferber, R. Ludwig, H. G. Weber, "Error-free all-optical add-drop multiplexing at 160 Gbit/s", Electron. Letters **39** (14), page 1074-1076 (2003)
4. E. Duservire, C. R. Giles, J.R. Simpson, "Gain Saturation Effects in High-speed, Multichannel Erbium-Doped Fiber Amplifiers at λ = 1.53 μm", Journal of Lightwave Technology, **7** (12), page 2095-2104 (1989)

Authorized licensed use limited to: Danmarks Tekniske Informationscenter. Downloaded on February 17,2010 at 05:25:07 EST from IEEE Xplore. Restrictions apply.