Downloaded from orbit.dtu.dk on: Apr 27, 2024

DTU Library

Reducing Electricity Demand Peaks by Scheduling Home Appliances Usage

Rossello Busquet, Ana; Kardaras, Georgios; Iversen, Villy Bæk; Soler, José; Dittmann, Lars

Published in:
Energy Systems and Technologies for the Coming Century

Publication date:
2011

Document Version
Publisher's PDF, also known as Version of record

Link back to DTU Orbit

Citation (APA):
Rossello Busquet, A., Kardaras, G., Iversen, V. B., Soler, J., & Dittmann, L. (2011). Reducing Electricity Demand Peaks by Scheduling Home Appliances Usage. In L. Sønderberg Petersen, & H. H. Larsen (Eds.), *Energy Systems and Technologies for the Coming Century: Proceedings - Risø International Energy Conference 2011, May 10 - 12* (pp. 156-163)

General rights
Copyright and moral rights for the publications made accessible in the public portal are retained by the authors and/or other copyright owners and it is a condition of accessing publications that users recognise and abide by the legal requirements associated with these rights.

- Users may download and print one copy of any publication from the public portal for the purpose of private study or research.
- You may not further distribute the material or use it for any profit-making activity or commercial gain
- You may freely distribute the URL identifying the publication in the public portal

If you believe that this document breaches copyright please contact us providing details, and we will remove access to the work immediately and investigate your claim.

Reducing Electricity Demand Peaks by Scheduling Home Appliances Usage

Ana Rosselló-Busquet, Georgios Kardaras, Villy Bæk Iversen José Soler, Lars Dittmann
Networks Technology & Service Platforms group, Department of Photonics Engineering
Technical University of Denmark, 2800 Kgs. Lyngby, Denmark
{aros, geka, vbiv, joss, ladit}@fotonik.dtu.dk

Abstract

Nowadays there is a tendency to consume electricity during the same period of the day leading to demand peaks. Regular energy consumption habits lead to demand peaks at specific temporal intervals, because users consume power at the same time. In order to avoid demand peaks, users' appliances should consume electricity in a more temporarily distributed way. A new methodology to schedule the usage of home appliances is proposed and analyzed in this paper. The main concept behind this approach is the aggregation of home appliances into priority classes and the definition of a maximum power consumption limit, which is not allowed to be exceeded during peak hours. The scenario simulated describes a modern household, where the electrical devices are classified in low and high priority groups. The high priority devices are always granted power in order to operate without temporal restrictions. On the contrary, the low priority devices have to pause their operation, when the algorithm dictates it, and resume it in the future. This can become beneficial for both energy companies and users. The electricity suppliers companies will be capable of regulating power generation during demand peaks periods. Moreover, users can be granted lower electricity bill rates for accepting delaying the operation of some of their appliances. In order to analyze this scenario, teletraffic engineering theory, which is used in evaluating the performance of telecommunication networks, is used. A reversible fair scheduling (RFS) algorithm, which was originally developed for telecommunication networks, is applied. The purpose is to analyze how a power consumption limit and priorities for home appliances will affect the demand peak and the users' everyday life. Verification of the effectiveness of the RFS algorithm is done by means of simulation and by using real data for power consumption and operation hours. The defined maximum power limit of 750 and 1000 Watt was not exceeded during peak demand hours. The trade-off was an average delay of 36,1 and 12,36 minutes, respectively, for the aggregated low priority class.

1 Introduction

It is undisputable that nowadays the number of electrical appliances in modern residences has significantly increased compared to the past. The need for immediate and simultaneous energy consumption has resulted in frequent demand peaks. The problem arising for utility companies is the fact that they are obliged to deploy expensive strategies to succeed generating enough energy to meet the demand. If the demand is not met, this could lead to major black-outs or denial of service. This paper investigates a method which can result in a more distributed consumption of energy over time, in each household. The concept is relatively simple and it is based on the idea of spreading electricity consumption over a finite period of time. The different appliances are scheduled correspondingly based on their priority type. The overall goal of this method is to guarantee that a defined electricity consumption limit will not be exceeded taking into account the specific needs of each household. This technique could result in a more distributed consumption which will lower the demand peaks. As the system presented will ease the task of forecasting consumption, a reduction of greenhouse gasses can be achieved.

2 Electricity Management System

The aim of the proposed system is to schedule the consumption of appliances in the users' residence so that the total consumption does not exceed a certain limit. By limiting the consumption of each user, electricity demand peaks could be reduced or even avoided. The purpose of the system is not to reduce the electricity consumption of the household but to spread the consumption over time and avoid having all the appliances turned on at the same time.

To evaluate the system, a household with a television set, a computer, a washing machine, a dryer and a dishwasher is analyzed. In the rest of this paper, these devices will be referred to as household appliances or appliances. Furthermore, these appliances have been divided into two sets: high priority appliances (television set, computer) and low priority appliances (washing machine, dryer and dishwasher). The set of high priority appliances are the household appliances that consume electricity as soon as they are turned on, they cannot be denied electricity and cannot be paused or delayed in any way. On the other hand, for the set of low priority appliances, it is not necessary to provide electricity immediately; it is possible that these appliances wait before being turned on (delayed) and also paused. Therefore their task duration could be prolonged.

2.1 System architecture

The system considered in this paper is illustrated in Fig. 1 and consists of the household appliances and a Control System (CS).

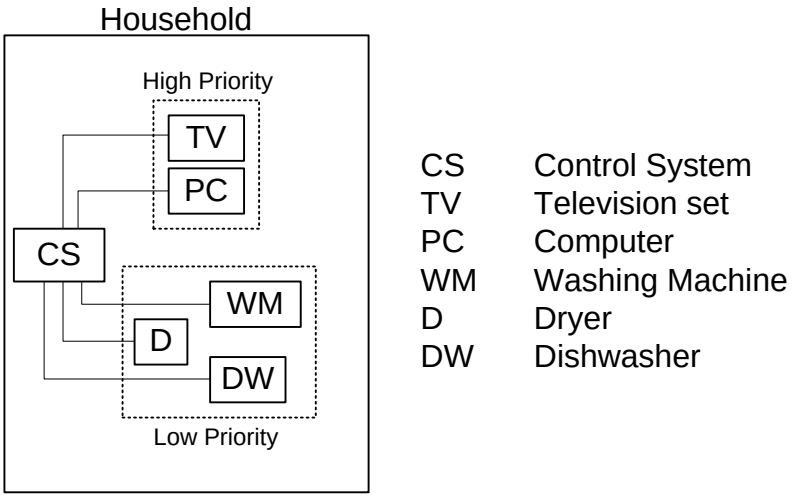

Figure 1: System Architecture

The CS is capable of communicating with the household appliances and monitoring the consumption of each appliance. The main function of the CS is to keep the total electricity consumption under the defined consumption limit. In order to achieve this, the CS is capable of sending basic commands to the household appliances such as *on*, *off*, *pause* and *resume*. The *on* and *off* commands are used to turn on and off the household appliances respectively. The *pause* command is used to force the appliance into stand-by mode, where its consumption is negligible compared to its consumption when it is turned on. On the other hand, the *resume* command is used to turn on the appliance, when it is in stand-by mode. As a result the appliance will then continue its task. For instance, assume that the washing machine has received the *pause* command after the clothes are rinsed and is in stand-by mode. Once it receives the *resume* command, it will continue the washing program from that point by making the drum rotate, instead of starting the washing program from the beginning. The CS will decide which appliances can be paused and when they should continue their task by following the event driven scheduling algorithm illustrated in Fig. 2. This is explained in detail in the next section.

3 Event Driven Scheduling Algorithm

In order to keep the total consumption of the household under the determined limit, an event driven scheduling algorithm is used. The flow of the algorithm is determined by two events. Arrival event occurs when an appliance is switched on and requests to use electricity. Departure event occurs when an appliance has finished its task and stops consuming electricity. The algorithm the CS uses is shown in Fig. 2.

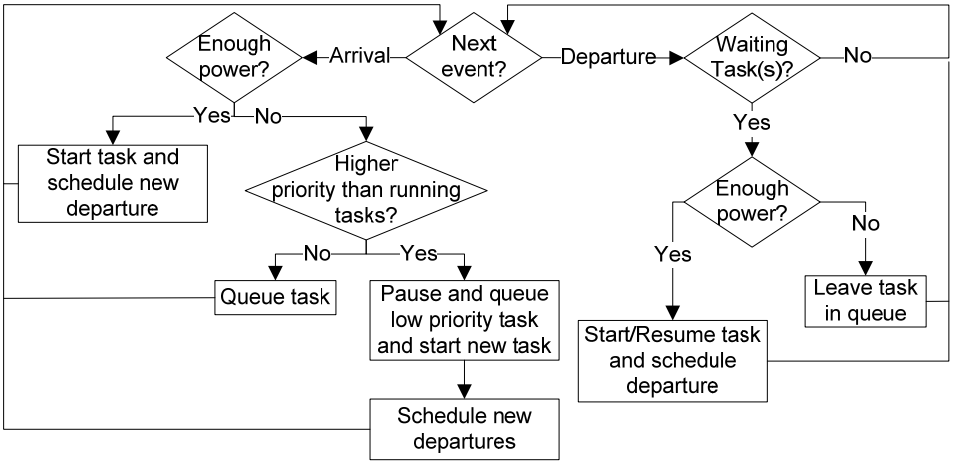

Figure 2: Event Driven Scheduling Algorithm

In order for the appliance to be able to send the request message to the CS, the appliance needs to consume some power. However, this consumption is not considered in this paper as a simplified model is used. In the same way, when an appliance is paused it has to be able to listen for the *resume* message from the CS. This consumption is also not taken into consideration in this simplified model.

When the user turns on an appliance, the CS will receive a request from that appliance to consume power. The CS will then calculate if there is enough power to turn on that appliance without exceeding the maximum consumption:

$$\max_consumption \leq \sum_{i=1}^{N_1} x_i + x_{new} \qquad (1)$$

where *max_consumption* is the defined maximum electricity consumption, N_1 is the number of appliances turned on, x_i is the consumption of the appliance i and x_{new} is the consumption of the appliance the user just switched on. If equation (1) stands then the appliance requesting to consume electricity is turned on as the total consumption does not exceed the limit. On the other hand, if equation (1) does not stand, the CS proceeds to examine the priorities of the appliances. The CS will try to find a set of N_2 appliances, which are already turned on ($N_2 \subset N_1$), and which have lower priority than the appliance requesting to consume. So the following equation is fulfilled:

$$x_{new} \leq \sum_{j=1}^{N_2} x_j + (\max_consumption - \sum_{i=1}^{N_1} x_i) \qquad (2)$$

where x_j is the consumption of the appliance j and the term in between brackets is the available consumption before the limit consumption is reached. If the CS can find a set N_2 that verifies equation (2), these appliances will be paused and added to the *paused appliances list*. The CS will send the command *pause* to the N_2 appliances and it will grant access to the new appliance, as the maximum consumption is not exceeded. On the contrary if the CS cannot find a set of N_2 appliances that fulfill equation (2), the appliances requesting power will be added to the *paused appliances list*.

When an appliance is turned off or it has finished its task, the CS will detect this as a departure event. If the *paused appliances list* is not empty, the CS will evaluate the following equation:

$$\max_consumption \leq \sum_{i=1}^{N_1} x_i + x_{paused} \qquad (3)$$

where x_{paused} is the power consumption of the paused appliance found in the *paused appliances list*. If equation (3) stands, this paused appliance will receive a *resume* command from the CS and will be removed from the *paused appliances list*. Furthermore, if the *paused appliances list* still contains paused appliances, the CS will evaluate equation (3) again until there are no more appliances left in the *paused appliances list* or the maximum consumption is reached. The CS evaluates the appliances in the paused appliances list in input order, FIFO (first-in-first-out), as they will all have the same priority, low priority.

4 Teletraffic Theory Revised

Teletraffic engineering is the application of probability theory and stochastic mathematical modeling for solving problems concerning network planning, evaluating network performance and deriving the relationship between grade-of-service and system capacity [1]. The aim is to dimension the network accordingly and establish the appropriate traffic controls. In case of different services, traffic classes are used to aggregate the services according to their grade-of-service requirements. The user flows, or the data to be transmitted by the users, are divided in classes. This division is used as the basis for differentiated processing and service.

The Reversible Fair Scheduling (RFS) algorithm presented and used in this paper has its origin in teletraffic engineering. It is a bandwidth allocation scheduling algorithm and its aim is to allocate resources dynamically to networks supporting multiple services. The resources are allocated depending on the type of user request.

Therefore, the service requiring the highest amount of resources will be served, as long as, the total capacity or defined limit of the system is not exceeded. As shown in Figure 3, a communication link consists of *n* channels and *k* buffers. The total number of supported services classes is N, which occupy the resources of the communication link. The system will receive requests from these N classes to use some of the n channels in communication link. When a request is received for one of the classes that requires less channels than the available number in the link, it can be served immediately [1, 2].

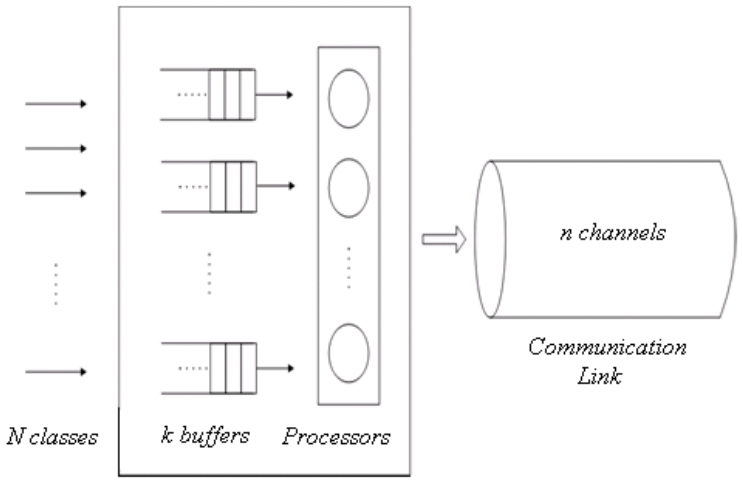

Fig. 1: Resource allocation in a network communication link [3].

5 Mapping Teletraffic Theory to Energy Efficient Homes

In this section, the RFS algorithm parameters are mapped to the users' appliances consumption and to the users' consumption habits.

It is assumed that appliances request arrive independently at random times and inter-arrival times of flows are exponentially distributed which results in a Poisson arrival process with specific arrival intensity. The RFS model is insensitive to the distribution of the service time and depends only on the corresponding mean values [2].

5.1 Aggregated Classes

As presented in section 2.1, only some appliances have been taken into consideration: television set, computer, washing machine, dryer and dishwasher. For simplicity reasons, the appliances have been aggregated into two traffic classes. Class 1 encloses the high priority appliances: television set and computer, whereas Class 2 encloses the low priority appliances: washing machine, dryer and dishwasher.

5.2 RFS Algorithm Parameters

In order to run the RFS algorithm, details about the consumption of appliances and usage are needed. Table I summarizes consumption of each appliance and average usage. This data attempts to model the appliances usage of a typical day of a family (4-6 persons) between 17:00-00:00, when most of electrical consumption takes place.

Appliances	***Model***	***Power Consumption***	***Average Usage [4]***	***Usage Duration***
Television Set	Television: 42LE4900 LG [5] DVD player: DVX550 LG [6] Home theater: S-HS111US Pioneer [7]	239 Watt	4,3 hours/day	120 min
Computer	PC: HP Pavilion Slimline s5670t series[8] Monitor: BX2340 Samsung [9]	242 Watt	3,5 hours/day	100 min
Washing machine	WM12S32XEE Siemens[10]	733 Watt	3,1 times/week	131 min
Dryer machine	WTW8658XEE Bosch[11]	609 Watt	4,4 times/week	134 min
Dish washer	SMS69T25EU Bosch [12]	720 Watt	4,1 times/week	100 min

Table I: Home Appliances Characteristics

As explained in the previous subsection, the different appliances are grouped into two traffic classes. For each class, the arrival rate, the mean service time, the service rate and the channels needed have been calculated, by using the data given in Table I. The arrival rate is defined as the average rate of incoming requests. Those are the parameters needed as input for the RFS algorithm. The RFS algorithm parameters are summarized in Table II. The arrival rate of class 2 has been calculated by adding the average usage for the low priority appliances. On the other hand, to calculate the arrival rate of class 1, the average usage and the duration of the usage of high priority appliances have been used. The mean service time is the approximated average duration of usage of the high priority appliances for class 1, and of the low priority appliances, for class 2. Each of the n channels has a capacity of 250 watts. Considering the power consumption of the appliances in Table I, it has been assumed that class 1 uses 1 channel (250 watts) and class 2 uses 3 channels (750 watts). The consumption of the appliances used to evaluate the system are higher than the actual values. For this reason, the results obtained in the simulation will be higher than what expected if accurate values where used. This is due to granularity precision within the teletraffic simulator software used.

Classes	*Arrival Rate (requests/day)*	*Mean Service Time*	*Service Rate*	*Occupied Channels (channels/request)*
Class 1				
High Priority	2,2	1,8 hour	0,5556	1
Class 2				
Low Priority	1,7	2 hour	0,1667	3

Table II: RFS Algorithm Parameters

Furthermore, we assume that the resulting blocking probability, after running the RFS algorithm with the above parameters, has to be negligible. The blocking probability refers to the probability that a request is rejected and it is not granted power neither put in queue. This is due to the fact that if the user turns on an appliance, the appliance should eventually proceed with its task, even though the task is delayed or prolonged. In the system described, the request comes from an appliance which expects to consume power. If the request comes from a high priority appliance, the scheduling algorithm will pause the necessary low priority appliances so that the high priority appliance can consume power, without exceeding the maximum consumption. On the other hand, if the request comes from a low priority appliance the request will be granted power if there is enough available power. If there is no available power, the appliance will be put in queue. It is assumed that this queue is long enough so that the blocking probability is negligible. The length of the queue in the RFS algorithm is represented by the number of buffers which has been chosen to be 50.

5.3 Device and Users' Assumptions

In order for the system described in this paper to work, it is assumed that home appliances such as washing machine, dryers and dish washers can be paused at any moment and resume after some time. On the other hand, high priority appliances are never paused and power is always granted to them by pausing low priority appliances if necessary.

As mentioned before, when an appliance sends a request message it needs to consume power to make this communication possible. However, this consumption is not considered in this paper as a simplified model is used. In the same way, when an appliance is paused it has to be able to listen for the *resume* message from the CS. This consumption is also not taken into consideration in this simplified model.

Furthermore, it is also assumed that users will accept their low priority appliances to be paused and therefore it will take longer for them to finish their task. In order to get users to accept those terms, utilities could offer the users using this type of system a reduction in their electricity bill. This can be used as a commercial strategy by utilities to face a more homogeneous consumption by using attractive pricing schemes. It has to be taken into consideration that electricity bills are increasing along with the number of electrical appliances and users are interested in reducing their electricity bill. In particular, during the winter of 2007/08, 20% of Americans could not pay on time their electricity bill and 8.7 million American consumers were disconnected from their electricity utility services [13].

6 Numerical Analysis

6.1 Methodology

Two different scenarios are simulated both using the parameters presented in section 5.2. In the first scenario, the maximum power consumption is set to 750 watts. Considering that each channel is 250 watts the total number of channels is 3. Low priority appliances need therefore 3 channels and high priority appliances need 1 channel. In the second scenario, the maximum power consumption is set to 1000 watts or 4 channels.

6.2 Results and Performance Metrics

The scenarios described in the previous subsection are simulated to obtain the mean waiting time for each service class. This is presented in Table III and IV.

The mean waiting time is the time the appliance has to wait before it is granted power. In the system described, high priority appliances are always granted power so their mean waiting time should be zero. However, due to the fact that the RFS algorithm does not pause class 2 appliances when a class 1 appliances request is received the mean waiting time for class 1 is not zero. The CS is responsible for discriminating the classes in priorities, as described in section 3. Nevertheless, after measuring the mean waiting time for each service class, it can be calculated how much time the low priority classes will be delayed. This is the sum of the mean waiting time of class 1 and class 2.

Table III and Table IV present the simulation results for 750 watts maximum consumption and 1000 watts maximum consumption, respectively.

Classes	***Mean Waiting Time RFS algorithm***	***Mean Waiting Time Scheduling algorithm***
Class 1 *High Priority*	6,74 min	0 min
Class 2 *Low Priority*	29,36 min	36,1 min

Table III: RFS Algorithm Results for 750 watts maximum consumption

Classes	***Mean Waiting Time RFS algorithm***	***Mean Waiting Time Scheduling algorithm***
Class 1 *High Priority*	1,08 min	0 min
Class 2 *Low Priority*	11,28 min	12,36 min

Table IV: RFS Algorithm Results for 1000 watts maximum consumption

By setting the maximum consumption to 750 watts the low priority appliances will in average take 36,1 minutes longer to finish their tasks than if there was no maximum consumption limit. On the other hand, if the maximum consumption is set to 1000 watts the delay of low priority appliances is only of 12,36 minutes. As stated before, high priority appliances will not be affected by setting a consumption limit and will never have to wait for consuming electricity. Considering that low priority appliances tasks take around 120 minutes to finish, setting a consumption limit to 750 watts will increment their task time a 30,1% and 10,3% when the consumption limit is set to 1000 watts.

7 Conclusion

In this paper, an event driven scheduling algorithm for regulating electricity demand peak for home appliances is presented. The objective of the system is to provide a tool for scheduling the operation of daily use home devices, guaranteeing that a maximum limit of power consumption is never exceeded during peak demand hours. The latter can be beneficial for both users and energy companies, as explained throughout this paper. To analyze the proposed event scheduling algorithm, Reversible Fair Scheduling (RFS) is used. RFS is a bandwidth allocation algorithm and originates from teletraffic theory. The parameters of RFS algorithm have been adjusted to the home appliances characteristics and users' appliance usage.

The scenario presented in this paper considers some of the appliances found in a modern household, where the electrical devices are classified in low and high priority groups.

The high priority appliances are always granted power and are never paused. On the contrary, the low priority appliances have to pause their operation, when the scheduling algorithm dictates it, and resume later on. The effectiveness is verified by the RFS algorithm with data obtained from real appliances and studies about users' appliances usage. Two scenarios with different maximum power limits have been simulated, 750 watts and 1000 watt. For a consumption limit of 750 watts, the low priority appliances will have a delay of approximately 36 minutes, which supposes a 30% increment in their task time. However, if the consumption limit is 1000 watts the delay is reduced to approximately 12 minutes, which supposes only an increment of a 10% in their task time.

8 References

[1] Iversen, V.B., "Teletraffic Theory and Network Planning", Technical University of Denmark, 2010 Textbook. Available: http://oldwww.com.dtu.dk/teletraffic/handbook/telenook.pdf

[2] Iversen, V.B., "Reversible Fair Scheduling: the teletraffic revisited", 20th International Teletraffic Congress, Ottawa, Canada 2007.

[not used] M. Chanbari, C.J. Hughes, M.C. Sinclair, J. P. Eade, "Principles of Performance Engineering for telecommunication and information systems" (IEEE elecommunications Series) 1997.

[3] Evangelos Iliakis, Georgios Kardaras, "Resource Allocation in Next Generation Internet: Provisioning QoS for Future Networks based on Teletraffic Theory", 2010.

[4] "*The Smart Grid: An Introduction*", sponsored by DOE's Office of Electricity Delivery and Energy Reliability, U.S Department of Energy, 2008.

[5] LG 32LE4900, Specifications, ECO, accessed 10 March 2011, http://www.lg.com/uk/tv-audio-video/televisions/LG-led-tv-42LE4900.jsp
[6] LG DVX550, Specifications, POWER, accessed 10 March 2011, http://www.lg.com/uk/tv-audio-video/video/LG-dvd-player-DVX550.jsp
[7] Pioneer S-HS111US, Specifications, accessed 10 March 2011, http://www.pioneerelectronics.com/PUSA/Home/Home-Theater-Systems/S-HS111US
[8] HP Pavilion Slimline s5670t series, Specs, accessed 10 March 2011, http://www.shopping.hp.com/webapp/shopping/store_access.do?template_type=series_detail&category=desktops&series_name=s5670t_series&jumpid=in_R329_prodexp/hhoslp/psg/desktops/promo_tile/3/dt_promo_tile3_s5670t_113
[9] Samsung BX2340, accessed 10 March 2011, http://www.samsung.com/uk/consumer/pc-peripherals/monitors/professional/LS23CBUMBV/EN/index.idx?pagetype=prd_detail&tab=specification
[10] Siemens WM12S32XEE, Ficha tecnica, accessed 10 March 2011, http://www.siemens-home.es/WM12S32XEE.html

[11] Bosch WTW8658XEE, Ficha tecnica, accessed 10 March 2011, http://www.bosch-home.es/WTW8658XEE.html
[12] Bosch SMS69T25EU, Ficha tecnica, accessed 10 March 2011,http://www.bosch-home.es/SMS69T25EU.html

[13] U.S. Energy Information Administration, Independent Statistics and Analysis. Available: http://www.eia.doe.gov